MASSACHUSETTS DEPARTMENT OF TRANSPORTATION
HIGHWAY DIVISION

NATICK/FRAMINGHAM COCHITUATE RAIL TRAIL			
STATE	FED. AID PROJ. NO.	SHEET NO.	TOTAL SHEETS
MA	STP(TE)/TAP/CMQ-003S(206)	1	253
PROJECT FILE NO.	607732		

TITLE SHEET & INDEX

PLAN AND PROFILE OF

COCHITUATE RAIL TRAIL

IN THE CITY/TOWN OF

NATICK AND FRAMINGHAM

MIDDLESEX COUNTY

FEDERAL AID PROJECT NO. STP(TE)/TAP/CMQ-003S(206)

VOLUME 1 of 2

PS&E SUBMITTAL

THE MASSACHUSETTS HIGHWAY DEPARTMENT STANDARD SPECIFICATIONS FOR HIGHWAYS AND BRIDGES DATED 1988, AS AMENDED, THE SUPPLEMENTAL SPECIFICATIONS DATED JULY 1, 2015, THE OCTOBER 2017 CONSTRUCTION STANDARD DETAILS, THE 2015 OVERHEAD SIGNAL STRUCTURE AND FOUNDATION STANDARD DRAWINGS, MASSDOT TRAFFIC MANAGEMENT PLANS AND DETAIL DRAWINGS, THE LATEST MANUAL ON UNIFORM TRAFFIC CONTROL DEVICES FOR STREETS AND HIGHWAYS WITH MASSACHUSETTS AMENDMENTS, THE 1990 STANDARD DRAWINGS FOR SIGNS AND SUPPORTS, THE 1968 STANDARD DRAWINGS FOR TRAFFIC SIGNALS AND HIGHWAY LIGHTING, AND THE LATEST EDITION OF THE AMERICAN STANDARD FOR NURSERY STOCK, WILL GOVERN.

INDEX

SHEET NO.	DESCRIPTION
VOLUME 1	
1	TITLE SHEET & INDEX
2	LEGEND & ABBREVIATIONS
3	KEY PLAN
4	GENERAL NOTES AND PAVEMENT NOTES
5-6	TYPICAL SECTIONS
7-37	CONSTRUCTION PLANS
38-68	PROFILES
69-89	CURB TIE AND GRADING PLANS
90-110	SIGN AND PAVEMENT MARKING PLANS
111	SIGN SUMMARY
112-113	TRAFFIC SIGNAL PLANS
114-116	TEMPORARY TRAFFIC CONTROL PLANS
117-131	CONSTRUCTION STAGING PLANS
132-135	DETOUR PLANS
136-142	LANDSCAPE PLANS
143-147	LANDSCAPE DETAILS
148-152	CONSTRUCTION DETAILS
153-166	Bridge No. N-03-014
167-195	Bridge No. F-07-033 = N-03-029
VOLUME 2	
196-253	CROSS SECTIONS

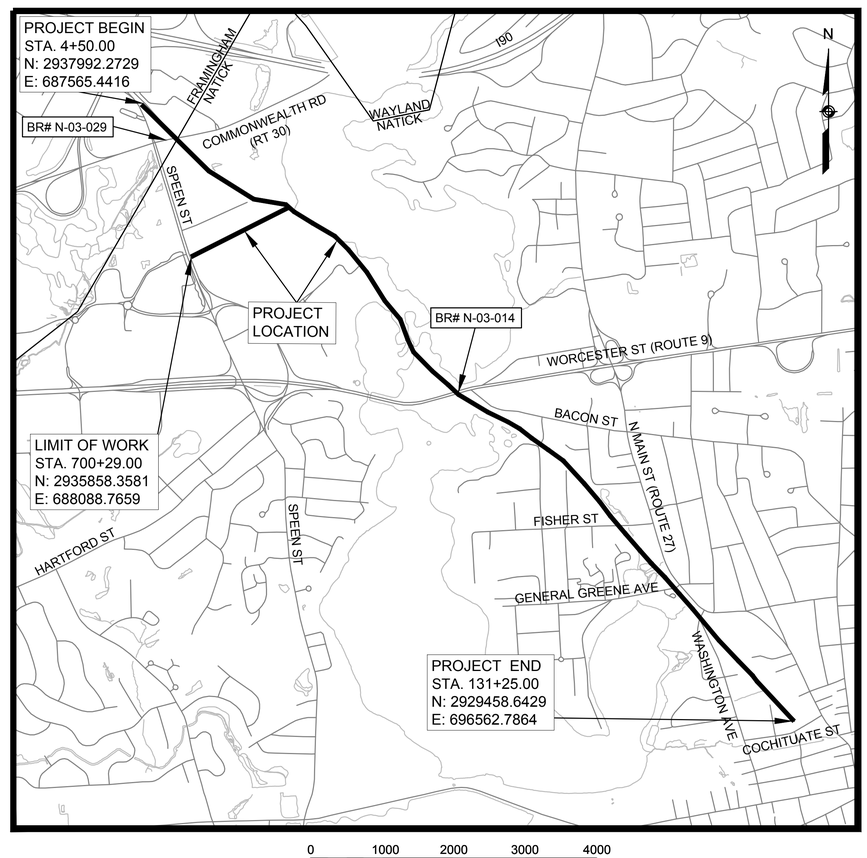

0 1000 2000 3000 4000

SCALE: 1" = 1000'

LENGTH OF PROJECT = 13,350.33 FEET = 2.53 MILES

DESIGN DESIGNATION (COCHITUATE RAIL TRAIL)

DESIGN SPEED	20 MPH
ADT	N/A
ADT	N/A
K	N/A
D	N/A
T (PEAK HOUR)	N/A
T (AVERAGE DAY)	N/A
DHV	N/A
DDHV	N/A
FUNCTIONAL CLASSIFICATION	SHARED-USE PATH

BETA
www.BETA-Inc.com

massDOT
Massachusetts Department of Transportation
Highway Division

RECOMMENDED FOR APPROVAL

CHIEF ENGINEER DATE

DEPARTMENT OF TRANSPORTATION
FEDERAL HIGHWAY ADMINISTRATION

APPROVED:

DIVISION ADMINISTRATOR DATE

APPROVED

HIGHWAY ADMINISTRATOR DATE

4576 TITLE SHEET.DWG Plotted on 31-Aug-2018 10:20 AM

GENERAL SYMBOLS

EXISTING	PROPOSED	DESCRIPTION
JB	JB	JERSEY BARRIER ON BRIDGE OR JERSEY BARRIER
CB	CB	CATCH BASIN
		CATCH BASIN CURB INLET
FP	FP	FLAG POLE
GP	GP	GAS PUMP
MB	MB	MAIL BOX
		POST SQUARE
		POST CIRCULAR
WELL	WELL	WELL
EHH	EHH	ELECTRIC HANDHOLE
		FENCE GATE POST
GG	GG	GAS GATE
BHL #	BHL #	BORING HOLE
MW #	MW #	MONITORING WELL
TP #	TP #	TEST PIT
		HYDRANT
		LIGHT POLE
CO.BD.		COUNTY BOUND
		GPS POINT
		CABLE MANHOLE
		DRAINAGE MANHOLE
		ELECTRIC MANHOLE
		GAS MANHOLE
		MISC MANHOLE
		SEWER MANHOLE
		TELEPHONE MANHOLE
		WATER MANHOLE
MHB	MHB	MASSACHUSETTS HIGHWAY BOUND
MON		MONUMENT
SB		STONE BOUND
TB		TOWN OR CITY BOUND
		TRAVERSE OR TRIANGULATION STATION
TPL or GUY	TPL or GUY	TROLLEY POLE OR GUY POLE
HTP		TRANSMISSION POLE
UFB	UFB	UTILITY POLE W/ FIREBOX
UPDL	UPDL	UTILITY POLE WITH DOUBLE LIGHT
ULT	ULT	UTILITY POLE W / 1 LIGHT
UPL	UPL	UTILITY POLE
		BUSH
•SIZE & TYPE		TREE
		STUMP
		SWAMP / MARSH
WG	WG	WATER GATE
PM	PM	PARKING METER
		OVERHEAD CABLE/WIRE
		CURBING
100 99		CONTOURS
		UNDERGROUND DRAIN PIPE (DOUBLE LINE 24 INCH AND OVER)
		UNDERGROUND ELECTRIC DUCT (DOUBLE LINE 24 INCH AND OVER)
		UNDERGROUND GAS MAIN (DOUBLE LINE 24 INCH AND OVER)
		UNDERGROUND SEWER MAIN (DOUBLE LINE 24 INCH AND OVER)
		UNDERGROUND TELEPHONE DUCT (DOUBLE LINE 24 INCH AND OVER)
		UNDERGROUND WATER MAIN (DOUBLE LINE 24 INCH AND OVER)
		BALANCE STONE WALL
		GUARD RAIL - STEEL POSTS
		GUARD RAIL - WOOD POSTS
		CHAIN LINK OR METAL FENCE
		WOOD FENCE
		HAY BALES/SILT FENCE
		TREE LINE OR LIMIT OF CLEARING AND GRUBBING
		SAWCUT LINE
		TOP OR BOTTOM OF SLOPE
		LIMIT OF EDGE OF PAVEMENT OR COLD PLANE AND OVERLAY
		BANK OF RIVER OR STREAM
		BORDER OF WETLAND
		100 FT WETLAND BUFFER
		200 FT RIVERFRONT BUFFER
		STATE HIGHWAY LAYOUT
		TOWN OR CITY LAYOUT
		COUNTY LAYOUT
		RAILROAD SIDELINE
		TOWN OR CITY BOUNDARY LINE
		PROPERTY LINE OR APPROXIMATE PROPERTY LINE
		EASEMENT

TRAFFIC SYMBOLS

EXISTING	PROPOSED	DESCRIPTION
1	1	CONTROLLER PHASE ACTUATED
		TRAFFIC SIGNAL HEAD (SIZE AS NOTED)
		WIRE LOOP DETECTOR (6' x 6' TYP UNLESS OTHERWISE SPECIFIED)
		VIDEO DETECTION CAMERA
		MICROWAVE DETECTOR
		PEDESTRIAN PUSH BUTTON, SIGN (DIRECTIONAL ARROW AS SHOWN) AND SADDLE
		EMERGENCY PREEMPTION CONFIRMATION STROBE LIGHT
		VEHICULAR SIGNAL HEAD
		VEHICULAR SIGNAL HEAD, OPTICALLY PROGRAMMED
		FLASHING BEACON
		PEDESTRIAN SIGNAL HEAD, (TYPE AS NOTED OR AS SPECIFIED)
RRSG	RRSG	RAILROAD SIGNAL
OR		SIGNAL POST AND BASE (ALPHA-NUMERIC DESIGNATION NOTED)
	20'	MAST ARM, SHAFT AND BASE (ARM LENGTH AS NOTED)
		HIGH MAST POLE OR TOWER
		SIGN AND POST
		SIGN AND POST (2 POSTS)
	20'	MAST ARM WITH LUMINAIRE
		OPTICAL PRE-EMPTION DETECTOR
		CONTROL CABINET, GROUND MOUNTED
		CONTROL CABINET, POLE MOUNTED
		FLASHING BEACON CONTROL AND METER PEDESTAL
		LOAD CENTER ASSEMBLY
		PULL BOX 12"x12" (OR AS NOTED)
		ELECTRIC HANDHOLE 12"x24" (OR AS NOTED)
		TRAFFIC SIGNAL CONDUIT

PAVEMENT MARKINGS SYMBOLS

EXISTING	PROPOSED	DESCRIPTION
		PAVEMENT ARROW - WHITE
ONLY	ONLY	LEGEND "ONLY" - WHITE
STOP	STOP	LEGEND "STOP" - WHITE
AHEAD	AHEAD	LEGEND "AHEAD" - WHITE
HWY	HWY	LEGEND "HWY" - WHITE
XING	XING	LEGEND "XING" - WHITE
	SL	STOP LINE - 12" WHITE LINE
	CW	CROSSWALK - 2-12" WHITE LINES
	SWL	SOLID WHITE LINE - 6"
	SYL	SOLID YELLOW LINE - 6"
	BWL	BROKEN WHITE LINE - 6" AT 10' LINE AND 30' GAP
	BYL	BROKEN YELLOW LINE - 6"
	DWL	DOTTED WHITE LINE- 6" AT 3' LINE AND 9' GAP
	DYL	DOTTED YELLOW LINE - 6" AT 3' LINE AND 9' GAP
	DWLEx	DOTTED WHITE LINE EXTENSION - 6"
	DYLEx	DOTTED YELLOW LINE EXTENSION - 6"
	DBWL	DOUBLE WHITE LINE - 2-6" LINES
	DBYL	DOUBLE YELLOW LINE - 2-6" LINES

ABBREVIATIONS

GENERAL

AADT	ANNUAL AVERAGE DAILY TRAFFIC
ABAN	ABANDON
ADJ	ADJUST
APPROX.	APPROXIMATE
A.C.	ASPHALT CONCRETE
ACCM PIPE	ASPHALT COATED CORRUGATED METAL PIPE
BIT.	BITUMINOUS
BC	BOTTOM OF CURB
BD.	BOUND
BL	BASELINE
BLDG	BUILDING
BM	BENCHMARK
BO	BY OTHERS
BOS	BOTTOM OF SLOPE
BR.	BRIDGE
CB	CATCH BASIN
CBCI	CATCH BASIN WITH CURB INLET
CC	CEMENT CONCRETE
CCM	CEMENT CONCRETE MASONRY
CEM	CEMENT
CI	CURB INLET
CIP	CAST IRON PIPE
CLF	CHAIN LINK FENCE
CL	CENTERLINE
CMP	CORRUGATED METAL PIPE
CSP	CORRUGATED STEEL PIPE
CO.	COUNTY
CONC	CONCRETE
CONT	CONTINUOUS
CONST	CONSTRUCTION
CR GR	CROWN GRADE
DHV	DESIGN HOURLY VOLUME
DI	DROP INLET
DIA	DIAMETER
DIP	DUCTILE IRON PIPE
DW	STEADY DON'T WALK - PORTLAND ORANGE
DWY	DRIVEWAY
ELEV (or EL.)	ELEVATION
EMB	EMBANKMENT
EOP	EDGE OF PAVEMENT
EXIST (or EX)	EXISTING
EXC	EXCAVATION
F&C	FRAME AND COVER
F&G	FRAME AND GRATE
FDN.	FOUNDATION
FLDSTN	FIELDSTONE
GAR	GARAGE
GD	GROUND
GG	GAS GATE
GI	GUTTER INLET
GIP	GALVANIZED IRON PIPE
GRAN	GRANITE
GRAV	GRAVEL
GRD	GUARD
HDW	HEADWALL
HMA	HOT MIX ASPHALT
HOR	HORIZONTAL
HYD	HYDRANT
INV	INVERT
JCT	JUNCTION
L	LENGTH OF CURVE
LB	LEACH BASIN
LP	LIGHT POLE
LT	LEFT
MAX	MAXIMUM
MB	MAILBOX
MH	MANHOLE
MHB	MASSACHUSETTS HIGHWAY BOUND
MIN	MINIMUM
NIC	NOT IN CONTRACT
NO.	NUMBER
PC	POINT OF CURVATURE
PCC	POINT OF COMPOUND CURVATURE
P.G.L.	PROFILE GRADE LINE
PI	POINT OF INTERSECTION
POC	POINT ON CURVE
POT	POINT ON TANGENT
PRC	POINT OF REVERSE CURVATURE
PROJ	PROJECT
PROP	PROPOSED
PSB	PLANTABLE SOIL BORROW
PT	POINT OF TANGENCY
PVC	POINT OF VERTICAL CURVATURE
PVI	POINT OF VERTICAL INTERSECTION
PVT	POINT OF VERTICAL TANGENCY
PVMT	PAVEMENT
PWW	PAVED WATER WAY

NATICK/FRAMINGHAM
COCHITUATE RAIL TRAIL

STATE	FED. AID PROJ. NO.	SHEET NO.	TOTAL SHEETS
MA	STP(TE)/TAP/CMQ-003S(206)	2	253
PROJECT FILE NO.	607732		

LEGEND & ABBREVIATIONS

ABBREVIATIONS (cont.)

GENERAL

R	RADIUS OF CURVATURE
R&D	REMOVE AND DISPOSE
RCP	REINFORCED CONCRETE PIPE
RD	ROAD
RDWY	ROADWAY
REM	REMOVE
RET	RETAIN
RET WALL	RETAINING WALL
ROW	RIGHT OF WAY
RR	RAILROAD
R&R	REMOVE AND RESET
R&S	REMOVE AND STACK
RT	RIGHT
SB	STONE BOUND
SHLD	SHOULDER
SMH	SEWER MANHOLE
ST	STREET
STA	STATION
SSD	STOPPING SIGHT DISTANCE
SHLO	STATE HIGHWAY LAYOUT LINE
SW	SIDEWALK
T	TANGENT DISTANCE OF CURVE/TRUCK %
TAN	TANGENT
TEMP	TEMPORARY
TC	TOP OF CURB
TOS	TOP OF SLOPE
TYP	TYPICAL
UP	UTILITY POLE
VAR	VARIES
VERT	VERTICAL
VC	VERTICAL CURVE
WCR	WHEEL CHAIR RAMP
WG	WATER GATE
WIP	WROUGHT IRON PIPE
WM	WATER METER/WATER MAIN
X-SECT	CROSS SECTION

TRAFFIC SIGNAL

CAB.	CABINET
CCVE	CLOSED CIRCUIT VIDEO EQUIPMENT
DW	STEADY DON'T WALK
FDW	FLASHING DON'T WALK
FR	FLASHING CIRCULAR RED
FRL	FLASHING RED LEFT ARROW
FRR	FLASHING RED RIGHT ARROW
FY	FLASHING CIRCULAR AMBER
FYL	FLASHING AMBER LEFT ARROW
FYR	FLASHING AMBER RIGHT ARROW
G	STEADY CIRCULAR GREEN
GL	STEADY GREEN LEFT ARROW
GR	STEADY GREEN RIGHT ARROW
GSL	STEADY GREEN SLASH LEFT ARROW
GSR	STEADY GREEN SLASH RIGHT ARROW
GV	STEADY GREEN VERTICAL ARROW
OL	OVERLAP
PED	PEDESTRIAN
PTZ	PAN, TILE, ZOOM
R	STEADY CIRCULAR RED
RL	STEADY RED LEFT ARROW
RR	STEADY RED RIGHT ARROW
TR SIG	TRAFFIC SIGNAL
TSC	TRAFFIC SIGNAL CONDUIT
W	STEADY WALK
Y	STEADY CIRCULAR AMBER
YL	STEADY AMBER LEFT ARROW

4576 LEGEND & ABBREV.DWG Plotted on 20-Aug-2018 11:06 AM

NATICK/FRAMINGHAM
COCHITUATE RAIL TRAIL

STATE	FED. AID PROJ. NO.	SHEET NO.	TOTAL SHEETS
MA	STP(TE)/TAP/CMQ-003S(206)	3	253
PROJECT FILE NO.	607732		

KEY PLAN

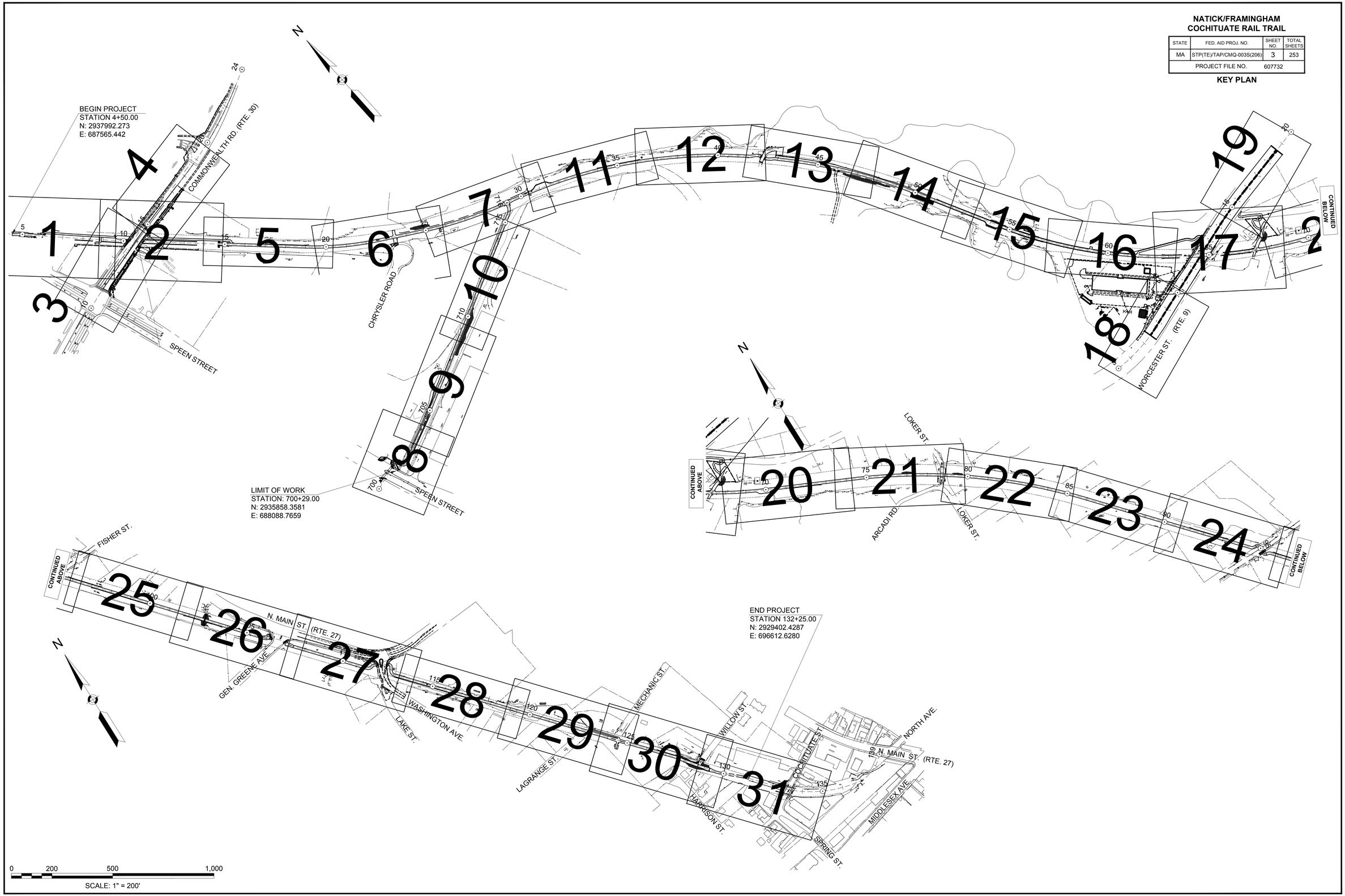

4578 KEY PLAN.DWG Plotted on 20-Aug-2018 11:06 AM

NATICK/FRAMINGHAM
COCHITUATE RAIL TRAIL

STATE	FED. AID PROJ. NO.	SHEET NO.	TOTAL SHEETS
MA	STP(TE)/TAP/CMQ-003S(206)	4	253
PROJECT FILE NO.	607732		

GENERAL NOTES & PAVEMENT NOTES

4576 GEN & PVMT NOTES.DWG Plotted on 20-Aug-2018 11:07 AM

GENERAL NOTES

1. REMOVED PER ADDENDUM NO. 3
2. THE ACCURACY AND COMPLETENESS OF ALL UNDERGROUND AND OVERHEAD UTILITIES AS SHOWN ON THE PLANS IS NOT GUARANTEED. IT SHALL BE THE CONTRACTOR'S RESPONSIBILITY TO DETERMINE EXACT LOCATION, SIZE, TYPE, DEPTH, ETC. OF ALL UNDERGROUND UTILITIES THAT MAY BE AFFECTED BY THE WORK. ALL TOWN-OWNED UTILITY STRUCTURES, WITHIN AREAS AFFECTED BY THE WORK, SHALL BE ADJUSTED OR REMODELED TO NEW LINE AND GRADE AS DIRECTED BY THE ENGINEER. ANY UTILITY AND/GUY POLES, WITHIN AREAS AFFECTED BY THE WORK, SHALL BE REMOVED AND RESET BY THE RESPECTIVE UTILITY COMPANY. ALTERATIONS TO UTILITIES AND UTILITY STRUCTURES NOT OWNED BY THE TOWN SHALL BE MADE BY THE RESPECTIVE UTILITY OWNERS. IT SHALL BE THE CONTRACTOR'S RESPONSIBILITY TO COORDINATE WORK IN ADVANCE WITH THOSE UTILITY OWNERS. THE CONTRACTOR MUST NOTIFY DIG-SAFE PRIOR TO ANY EXCAVATION IN PUBLIC OR PRIVATE WAYS OR UTILITY COMPANY RIGHT-OF-WAY OR EASEMENT.
3. WHERE AN EXISTING UTILITY IS FOUND TO CONFLICT WITH THE PROPOSED WORK, THE LOCATION, ELEVATION AND SIZE OF THE UTILITY STRUCTURE SHALL BE ACCURATELY DETERMINED AS SOON AS POSSIBLE BY THE CONTRACTOR AND THE INFORMATION FURNISHED TO THE ENGINEER FOR THE RESOLUTION OF THE CONFLICT.
4. THE CONTRACTOR SHALL BE RESPONSIBLE FOR MAINTAINING, BYPASSING AND SUPPORTING ALL EXISTING UTILITIES FOR THE DURATION OF THE PROJECT. THE CONTRACTOR SHALL BE RESPONSIBLE FOR REPAIRING OR REPLACING ANY UTILITIES DAMAGED DURING CONSTRUCTION.
5. THE CONTRACTOR SHALL VERIFY EXISTING GRADES. IF ANY ADJUSTMENT IS REQUIRED DUE TO DIFFERENT EXISTING GRADES FOUND IN THE FIELD, THE CONTRACTOR SHALL NOTIFY AND OBTAIN THE APPROVAL OF THE ENGINEER PRIOR TO PERFORMING THE WORK.
6. EROSION CONTROL DEVICES SHALL BE INSTALLED PRIOR TO THE START OF CONSTRUCTION, AND SHALL BE MAINTAINED THROUGHOUT CONSTRUCTION AND SHALL BE REMOVED UPON COMPLETION OF ALL THE WORK WHEN ALL DISTURBED AREAS ARE STABILIZED, TO THE SATISFACTION OF THE ENGINEER.
7. ANY EXISTING GRANITE CURB THAT CAN BE RE-USED SHALL BE R&R AS DIRECTED BY THE ENGINEER. NEW GRANITE CURB SHALL NOT BE INTERLAYED WITH R&R GRANITE CURB.
8. ALL TREES, SHRUBS AND HEDGES WITHIN THE THE LIMITS OF WORK SHALL BE RETAINED UNLESS OTHERWISE NOTED ON THE PLANS.
9. TREES AND FOLIAGE TO BE RETAINED, WHICH ENCROACHES UPON THE PATH AND/OR ADA CLEARANCE SHALL BE TRIMMED AS DIRECTED BY THE ENGINEER.
10. UNLESS OTHERWISE NOTED, ALL EXISTING WALLS AND FENCES WITHIN THE PROJECT LIMITS SHALL BE RETAINED.
11. WHEN WORKING NEXT TO EXISTING TREES, WALLS OR FENCES, THE CONTRACTOR SHALL EXERCISE EXTREME CAUTION NOT TO DISTURB THE EXISTING WALLS, TREES OR FENCES. IF THE CONTRACTOR DOES DAMAGE ANY EXISTING TREES, WALLS OR FENCES AS A RESULT OF THE CONSTRUCTION PROCESS, IT SHALL BE HIS/HER RESPONSIBILITY (THE CONTRACTOR) TO REPAIR ALL DAMAGES AS DIRECTED BY THE ENGINEER. ALL WORK ASSOCIATED WITH THE REPAIR OR REPLACEMENT OF EXISTING TREES, WALLS OR FENCES SHALL BE CONSIDERED AS INCLUDED IN THE BID PRICE AND NO ADDITIONAL COMPENSATION WILL BE ALLOWED THEREFORE.
12. EXISTING SIDEWALK, IN AREAS OF STONE, BRICK OR CONCRETE WALLS TO REMAIN, SHALL BE SAW-CUT 12 INCHES FROM THE EXISTING WALL AND EXCAVATED, BY MACHINE, UP TO THAT SAW-CUT LINE. EXCAVATION OF THE REMAINDER OF THE EXISTING SIDEWALK, FROM THE SAW-CUT LINE TO THE EXISTING WALL, SHALL BE DONE BY "HAND-WORK," AS DIRECTED BY THE ENGINEER.
13. IN AREAS OF NEW SIDEWALK, NEW EDGE OF PAVEMENT, CURB WITHOUT SIDEWALK OR OTHER WORK ADJACENT TO EXISTING GRASS AREAS, LOAM AND SEED SHALL BE PROVIDED AS NECESSARY TO REPAIR ANY DAMAGE TO THE GRADE CAUSED BY THE CONSTRUCTION PROCESS, AS DIRECTED BY THE ENGINEER.
14. ALL AREAS OUTSIDE THE LIMITS OF THE PROPOSED WORK THAT HAVE BEEN DISTURBED BY THE CONTRACTOR'S OPERATIONS SHALL BE RESTORED BY THE CONTRACTOR TO THEIR ORIGINAL CONDITION AT THE CONTRACTOR'S EXPENSE, TO THE SATISFACTION OF THE ENGINEER AND THE PROPERTY OWNER.
15. JOINTS BETWEEN NEW HOT MIX ASPHALT (HMA) ROADWAY PAVEMENT AND SAW-CUT EXISTING PAVEMENT SHALL BE SEALED WITH BITUMEN AND BACKSANDED.
16. THE CONTRACTOR SHALL SURVEY ALL EXISTING PAVEMENT MARKINGS AND SHALL RE-STRIPE PROPOSED PAVEMENT MARKINGS TO MATCH PRE- CONSTRUCTION MARKINGS UNLESS OTHERWISE SHOWN ON THE PLANS OR DIRECTED BY THE ENGINEER.
17. SIDEWALK AND DRIVEWAY REPAIR SHALL BE COMPLETED ONLY AS DIRECTED BY THE ENGINEER.
18. THE CONTRACTOR SHALL PERFORM CONSTRUCTION ACTIVITIES IN ACCORDANCE WITH THE ORDER OF CONDITIONS, WATER QUALITY CERTIFICATE AND ALL OTHER PERMITS REQUIRED. ALL THE ABOVE PERMITS ARE FOUND IN THE CONTRACT DOCUMENTS.
19. HORIZONTAL COORDINATE SYSTEM IS NAD83. THE VERTICAL DATUM IS NAVD88.

PAVEMENT NOTES

SHARED-USE ASPHALT PATH (SEE BRIDGE PLANS [SHEET 183] - FOR APPROACH SECTION PAVEMENT NOTES)

SURFACE COURSE	1.5" SUPERPAVE SURFACE COURSE - 9.5 (SSC-9.5) OVER
	ASPHALT EMULSION FOR TACK COAT (RS-1H)
INTERMEDIATE COURSE	2.5" SUPERPAVE INTERMEDIATE COURSE - 19.0 (SIC - 19.0)
SUB BASE	8" GRAVEL BORROW, TYPE B

FULL DEPTH BOX WIDENING (LESS THAN OR EQUAL TO 4 FEET)

SURFACE COURSE	1.5" SUPERPAVE SURFACE COURSE - 9.5 (SSC-9.5) OVER
	ASPHALT EMULSION FOR TACK COAT (RS-1H)
INTERMEDIATE COURSE	2.5" SUPERPAVE INTERMEDIATE COURSE - 19.0 (SIC - 19.0)
BASE	6" HES CEMENT CONCRETE (3,000 PSI, ITEM 431)
SUB BASE	8" GRAVEL BORROW, TYPE B

FULL DEPTH PAVEMENT (GREATER THAN 4 FEET)

SURFACE COURSE	1.5" SUPERPAVE SURFACE COURSE - 9.5 (SSC-9.5) OVER
	ASPHALT EMULSION FOR TACK COAT (RS-1H)
INTERMEDIATE COURSE	2.5" SUPERPAVE INTERMEDIATE COURSE - 19.0 (SIC - 19.0) OVER
	ASPHALT EMULSION FOR TACK COAT (RS-1H)
BASE COURSE	3.5" SUPERPAVE BASE COURSE - 25.0 (SBC-25.0)
SUB BASE	4" DENSE GRADED CRUSHED STONE FOR SUB BASE OVER
	8" GRAVEL BORROW, TYPE B

PAVEMENT MICROMILLING AND OVERLAY

SURFACE COURSE	1.5" SUPERPAVE SURFACE COURSE - 9.5 (SSC-9.5) OVER
	ASPHALT EMULSION FOR TACK COAT (RS-1H)
PAVEMENT MICROMILLING	1.75" ± 0.75" PAVEMENT MICROMILLING

CEMENT CONCRETE SIDEWALK AND WHEELCHAIR RAMPS

SURFACE COURSE	4" CEMENT CONCRETE (AIR ENTRAINED 4000 PSI, 3/4", 610)
SUB BASE	8" GRAVEL BORROW, TYPE B

HOT MIX ASPHALT WALK

SURFACE COURSE	1.25" SUPERPAVE SURFACE COURSE 9.5 (SSC-9.5) OVER
	ASPHALT EMULSION FOR TACK COAT (RS-1H) OVER
	1.25" SUPERPAVE SURFACE COURSE 9.5 (SSC-9.5)
SUB BASE	8" GRAVEL BORROW, TYPE B

HOT MIX ASPHALT DRIVEWAY

SURFACE COURSE	1.5" SUPERPAVE SURFACE COURSE - 9.5 (SSC-9.5)
	ASPHALT EMULSION FOR TACK COAT (RS-1H)
INTERMEDIATE COURSE	2" SUPERPAVE INTERMEDIATE COURSE - 19.0 (SIC - 19.0)
SUB BASE	8" GRAVEL BORROW, TYPE B

GRAVEL PATH

SURFACE COURSE	8" GRAVEL BORROW, TYPE B

NOTES

1. HOT MIX ASPHALT (HMA), HMA FOR PATCHING, ASPHALT EMULSION FOR TACK COAT AND HMA JOINT SEALANT SHALL BE IN ACCORDANCE WITH SECTION 450 QUALITY ASSURANCE OF HMA SPECIFICATIONS.

NATICK/FRAMINGHAM
COCHITUATE RAIL TRAIL

STATE	FED. AID PROJ. NO.	SHEET NO.	TOTAL SHEETS
MA	STP(TE)/TAP/CMQ-003S(206)	5	253
PROJECT FILE NO.	607732		

TYPICAL SECTIONS

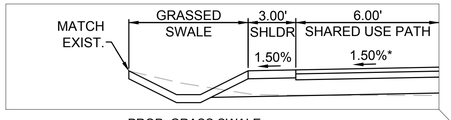

PROP. GRASS SWALE
0'-2' WIDE BOTTOM, 1' DEEP, 2:1 SIDE SLOPES
STATION 23+70 TO 30+30 LEFT

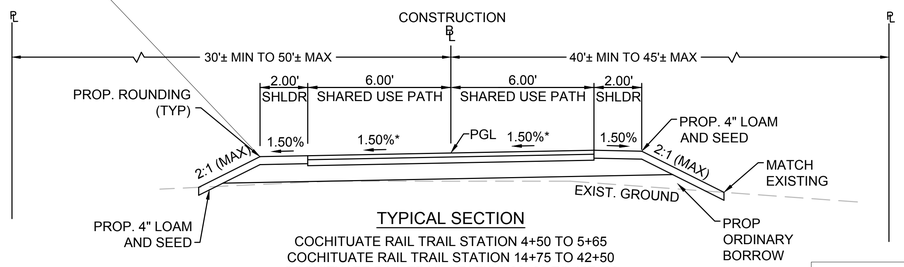

TYPICAL SECTION
COCHITUATE RAIL TRAIL STATION 4+50 TO 5+65
COCHITUATE RAIL TRAIL STATION 14+75 TO 42+50
COCHITUATE RAIL TRAIL STATION 83+00 TO 107+00
COCHITUATE RAIL TRAIL STATION 129+50 TO 131+25
SPEEN STREET SPUR STATION 701+50 TO 716+00
NOT TO SCALE

*TOLERANCE FOR CONSTRUCTION ±0.5%

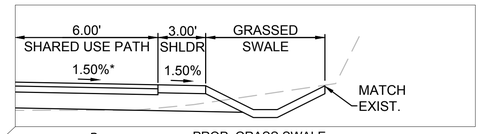

PROP. GRASS SWALE
0'-2' WIDE BOTTOM, 1' DEEP, 2:1 SIDE SLOPES
STATION 44+00 TO 49+00 RIGHT

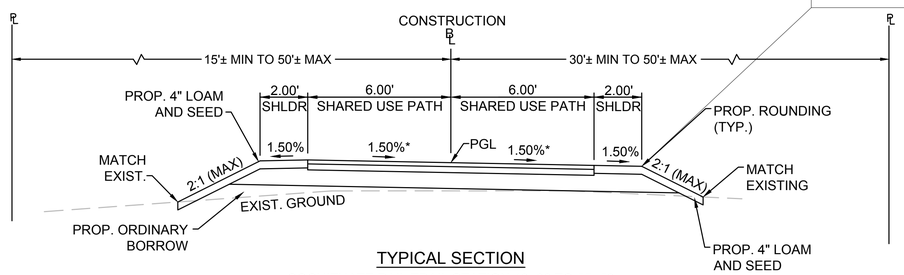

TYPICAL SECTION
COCHITUATE RAIL TRAIL STATION 43+00 TO 55+50
COCHITUATE RAIL TRAIL STATION 56+75 TO 63+55
COCHITUATE RAIL TRAIL STATION 65+70 TO 82+50
COCHITUATE RAIL TRAIL STATION 107+50 TO 129+00
NOT TO SCALE

*TOLERANCE FOR CONSTRUCTION ±0.5%

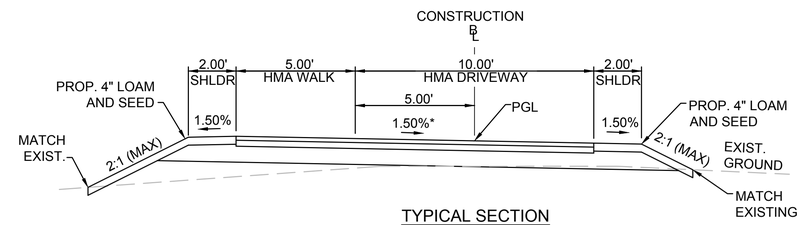

TYPICAL SECTION
BACON STREET CONNECTION 500+00± TO 501+44±
NOT TO SCALE

*TOLERANCE FOR CONSTRUCTION ±0.5%

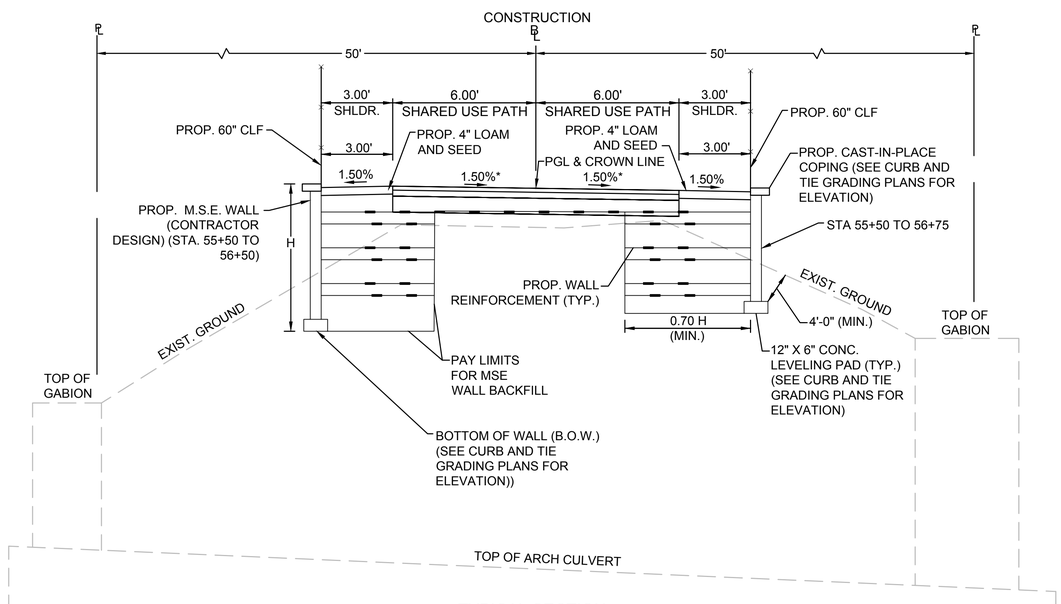

TYPICAL SECTION
COCHITUATE RAIL TRAIL STATION 55+50 TO 56+75
NOT TO SCALE

*TOLERANCE FOR CONSTRUCTION ±0.5%

4576 TYPICAL SECTIONS.DWG Plotted on 20-Aug-2018 11:07 AM

NATICK/FRAMINGHAM
COCHITUATE RAIL TRAIL

STATE	FED. AID PROJ. NO.	SHEET NO.	TOTAL SHEETS
MA	STP(TE)/TAP/CMQ-003S(206)	6	253
PROJECT FILE NO.	607732		

TYPICAL SECTIONS

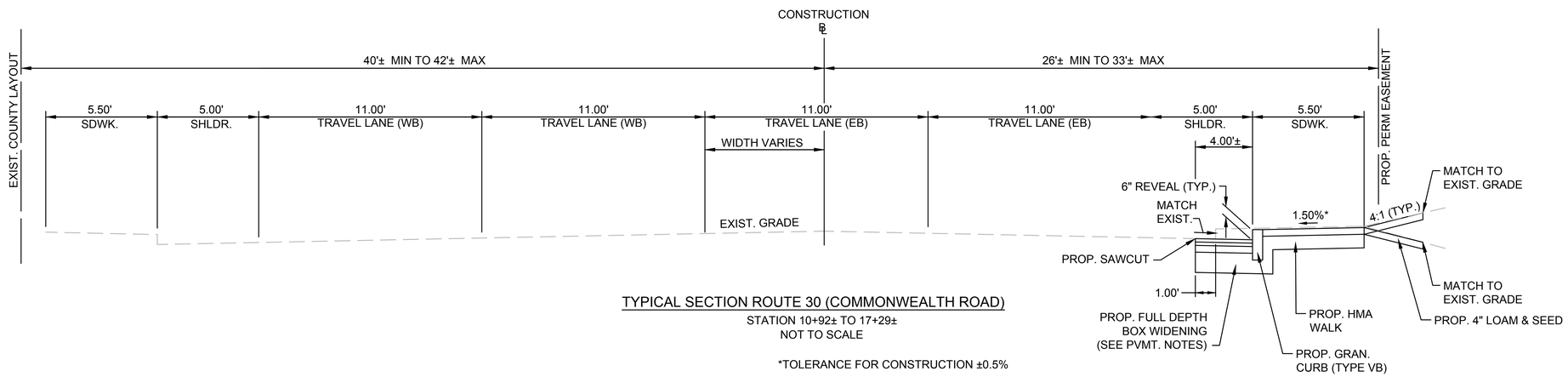

TYPICAL SECTION ROUTE 30 (COMMONWEALTH ROAD)
STATION 10+92± TO 17+29±
NOT TO SCALE

*TOLERANCE FOR CONSTRUCTION ±0.5%

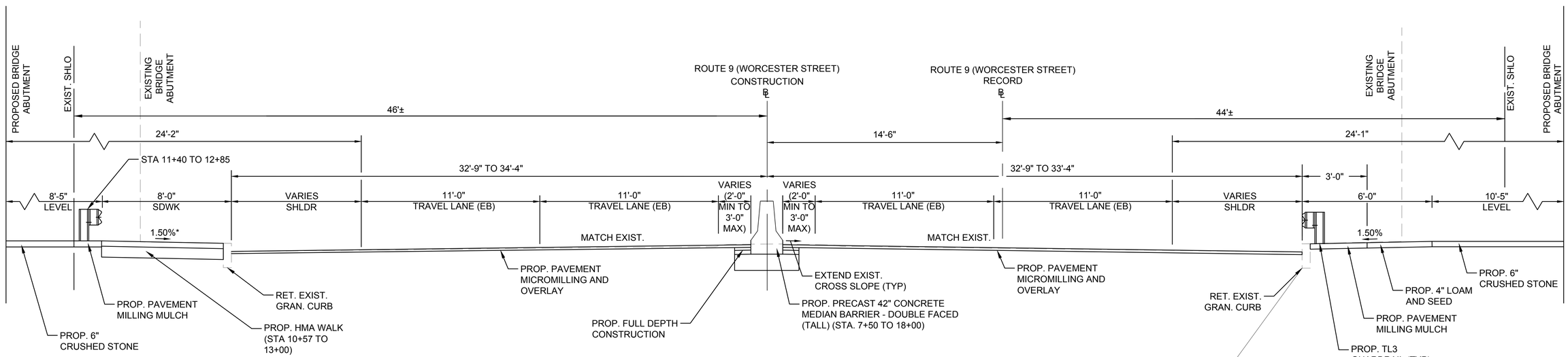

TYPICAL SECTION ROUTE 9 (WORCESTER STREET)
STATION 6+30± TO 18+80±
NOT TO SCALE

*TOLERANCE FOR CONSTRUCTION ±0.5%

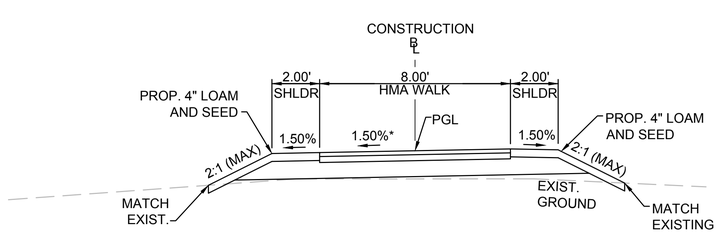

TYPICAL SECTION
ROUTE 30 SOUTH WALKWAY STATION 300+13± TO 304+44±
ROUTE 9 NORTH WALKWAY STATION 400+06± TO 403+48±
ROUTE 9 SOUTH WALKWAY STATION 600+10± TO 602+77±
NOT TO SCALE

*TOLERANCE FOR CONSTRUCTION ±0.5%

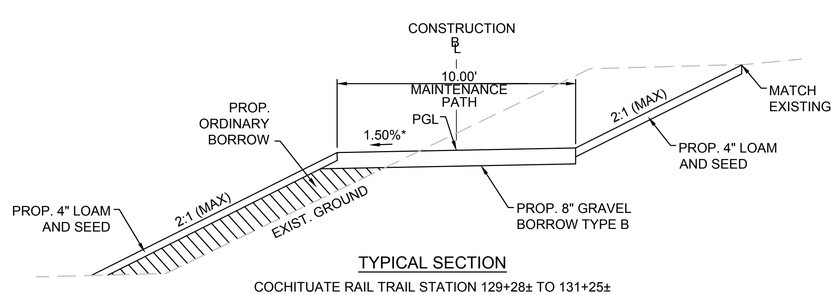

TYPICAL SECTION
COCHITUATE RAIL TRAIL STATION 129+28± TO 131+25±
NOT TO SCALE

*TOLERANCE FOR CONSTRUCTION ±0.5%

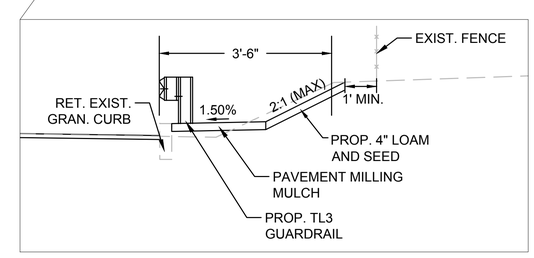

TYPICAL SECTION ROUTE 9 DETAIL
STATION 11+00 TO 12+50 RT
NOT TO SCALE

4576 TYPICAL SECTIONS.DWG Plotted on 20-Aug-2018 11:07 AM

HIGHWAY GUARD DETAILS	TRAFFIC SIGNAL CONDUIT	WATER SUPPLY ALTERATIONS	DRAINAGE DETAILS
NONE	NONE	NONE	NONE

NATICK/FRAMINGHAM
COCHITUATE RAIL TRAIL

STATE	FED. AID PROJ. NO.	SHEET NO.	TOTAL SHEETS
MA	STP(TE)/TAP/CMQ-003S(206)	7	253
PROJECT FILE NO.	607732		

CONSTRUCTION PLAN No. 1

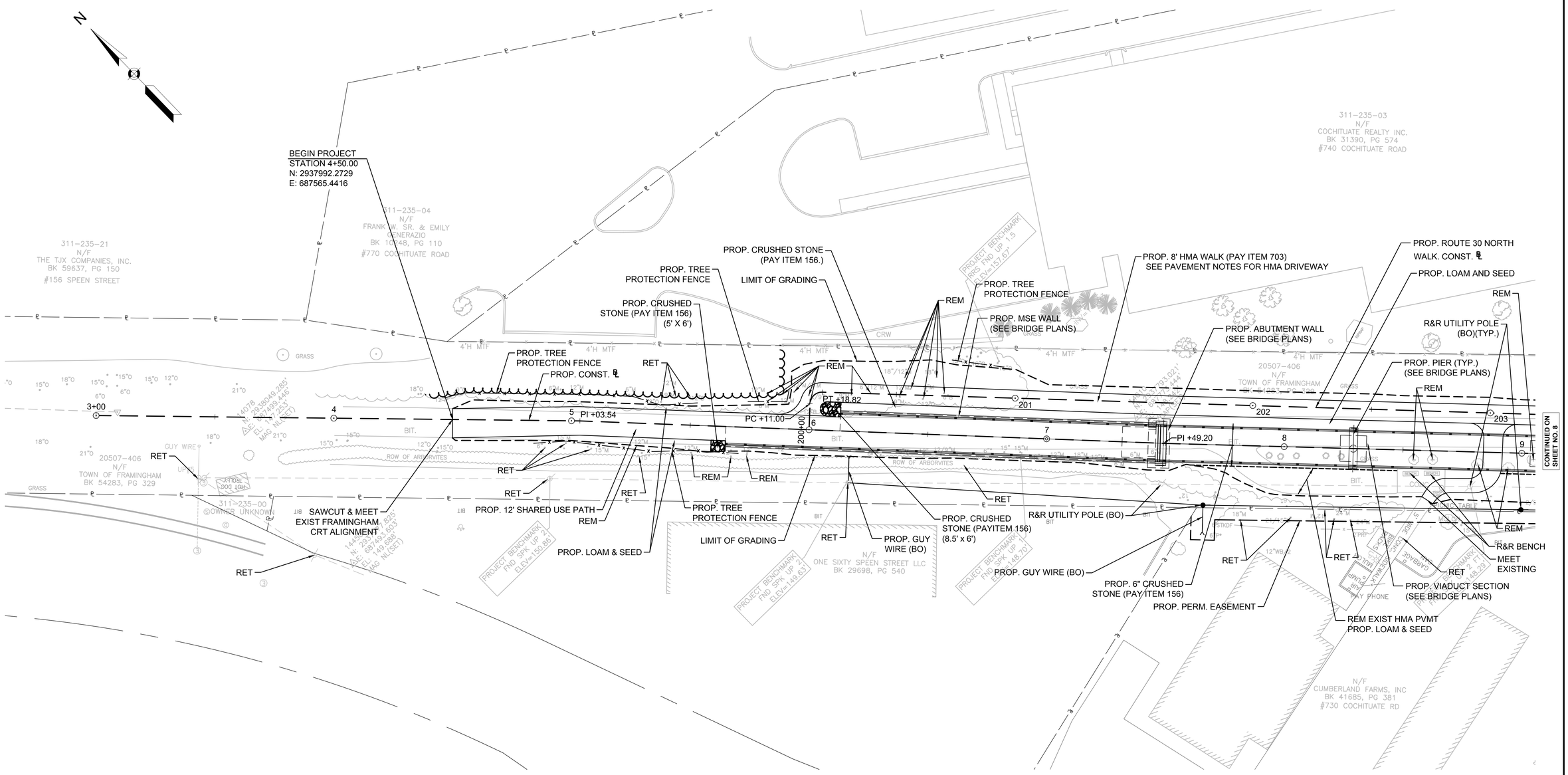

0 20 50 100
SCALE: 1" = 20'

FOR PROFILE:
SEE SHEET NOS. 38 & 67

4576 CONST PLANS 1-16.DWG Plotted on 20-Aug-2018 11:07 AM

HIGHWAY GUARD DETAILS	TRAFFIC SIGNAL CONDUIT	WATER SUPPLY ALTERATIONS	DRAINAGE DETAILS
NONE	NONE	NONE	NONE

NATICK/FRAMINGHAM
COCHITUATE RAIL TRAIL

STATE	FED. AID PROJ. NO.	SHEET NO.	TOTAL SHEETS
MA	STP(TE)/TAP/CMQ-003S(206)	8	253
PROJECT FILE NO.	607732		

CONSTRUCTION PLAN No. 2

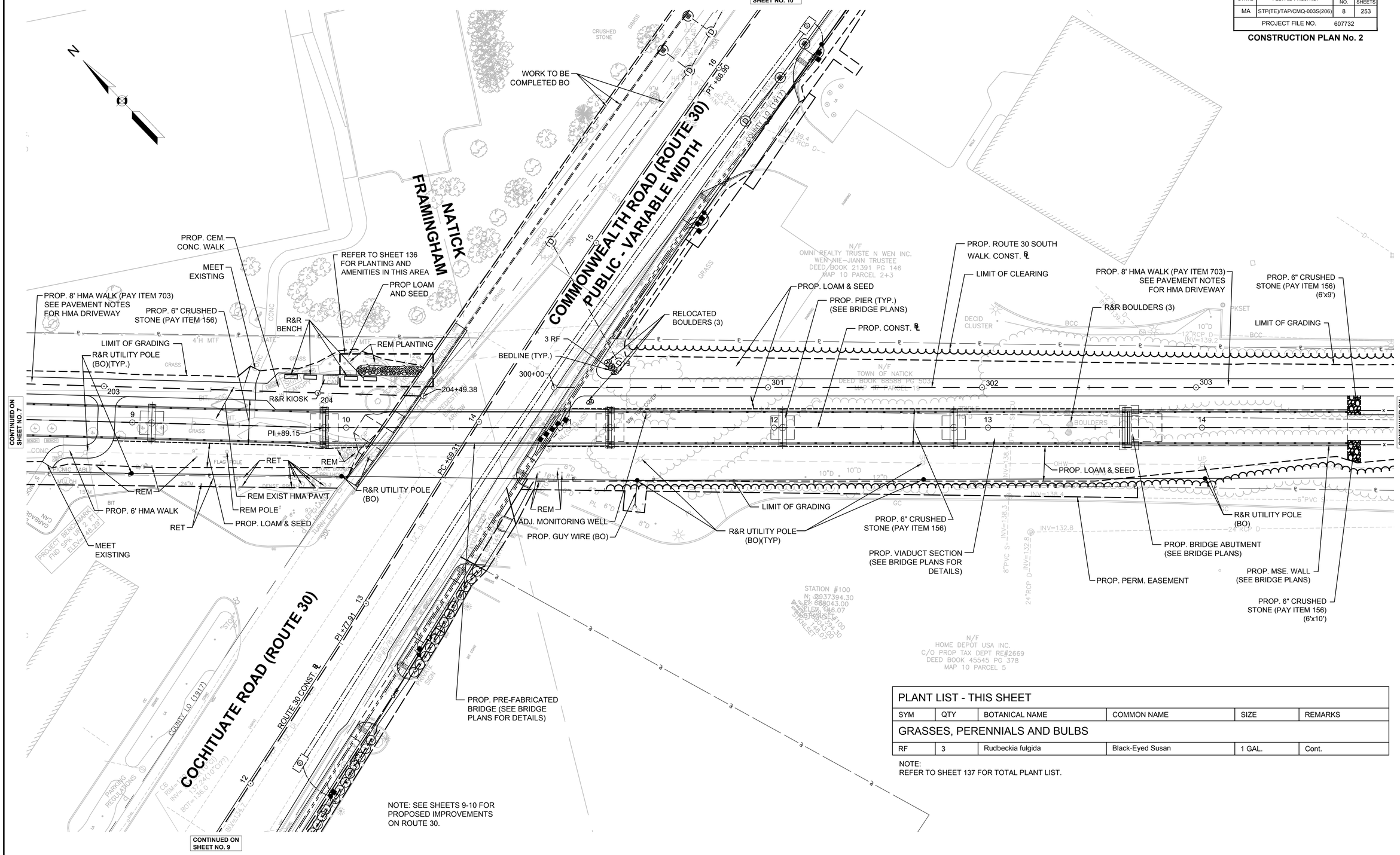

NOTE: SEE SHEETS 9-10 FOR PROPOSED IMPROVEMENTS ON ROUTE 30.

PLANT LIST - THIS SHEET					
SYM	QTY	BOTANICAL NAME	COMMON NAME	SIZE	REMARKS
GRASSES, PERENNIALS AND BULBS					
RF	3	Rudbeckia fulgida	Black-Eyed Susan	1 GAL.	Cont.

NOTE:
REFER TO SHEET 137 FOR TOTAL PLANT LIST.

0 20 50 100
SCALE: 1" = 20'

FOR PROFILE:
SEE SHEET NOS. 39 & 67

4576 CONST PLANS 1-16.DWG Plotted on 20-Aug-2018 11:07 AM

HIGHWAY GUARD DETAILS	TRAFFIC SIGNAL CONDUIT	WATER SUPPLY ALTERATIONS	DRAINAGE DETAILS
NONE	SEE BELOW	NONE	SEE BELOW

NATICK/FRAMINGHAM
COCHITUATE RAIL TRAIL

STATE	FED. AID PROJ. NO.	SHEET NO.	TOTAL SHEETS
MA	STP(TE)/TAP/CMQ-003S(206)	9	253
PROJECT FILE NO.	607732		

CONSTRUCTION PLAN No. 3

NOTE:
1. SEE SHEET 14 FOR CRT PLANS.
2. CURB AND SIDEWALK IMPROVEMENTS ALONG ROUTE 30 WESTBOUND TO BE COMPLETED BO PRIOR TO PROJECT FILE NO. 607732.

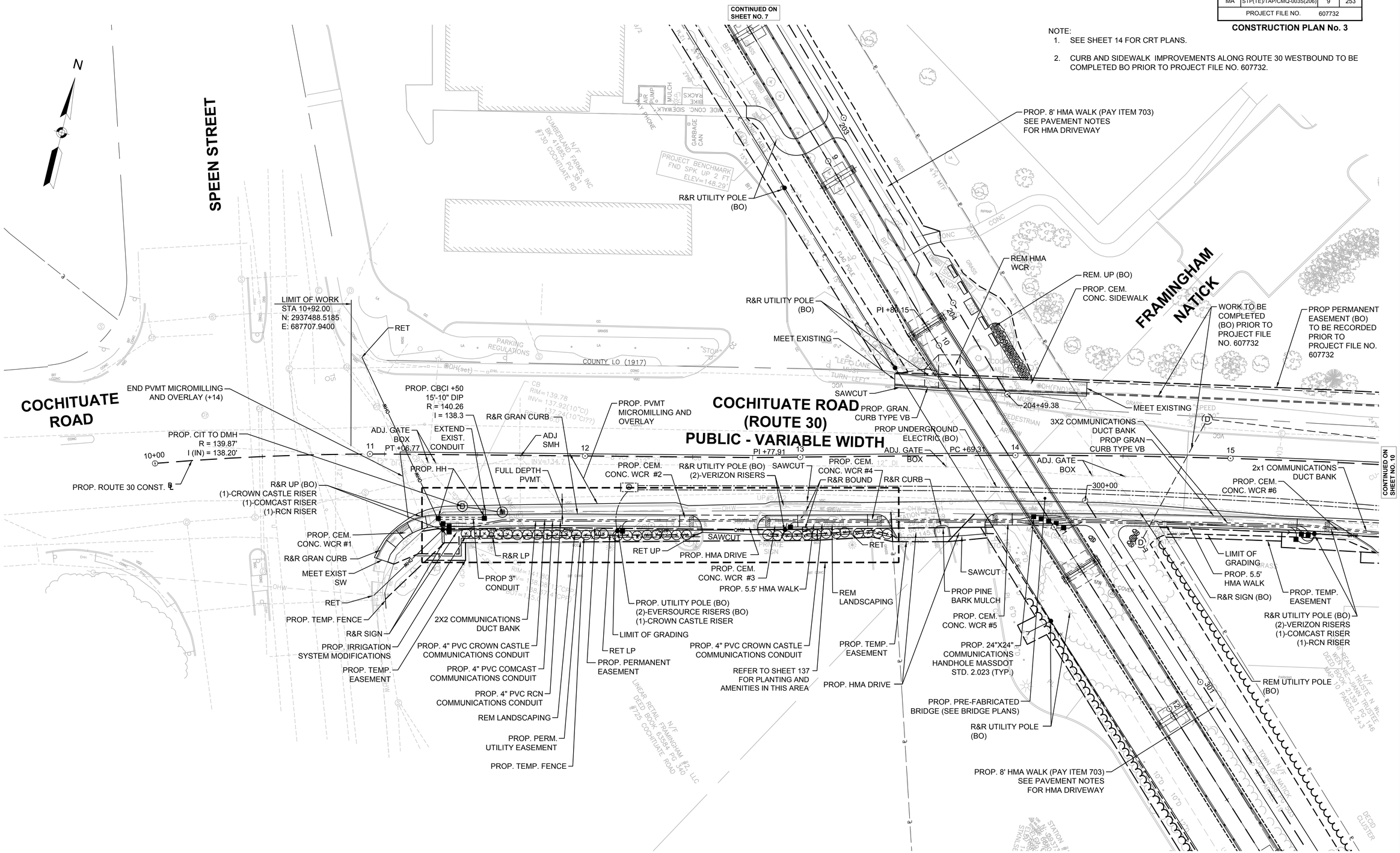

FOR PROFILE: SEE SHEET NO. 68

4576 CONST PLANS 1-16.DWG Plotted on 20-Aug-2018 11:07 AM

HIGHWAY GUARD DETAILS	TRAFFIC SIGNAL CONDUIT	WATER SUPPLY ALTERATIONS	DRAINAGE DETAILS
NONE	NONE	NONE	SEE BELOW

NATICK/FRAMINGHAM
COCHITUATE RAIL TRAIL

STATE	FED. AID PROJ. NO.	SHEET NO.	TOTAL SHEETS
MA	STP(TE)/TAP/CMQ-003S(206)	10	253
PROJECT FILE NO.	607732		

CONSTRUCTION PLAN No. 4

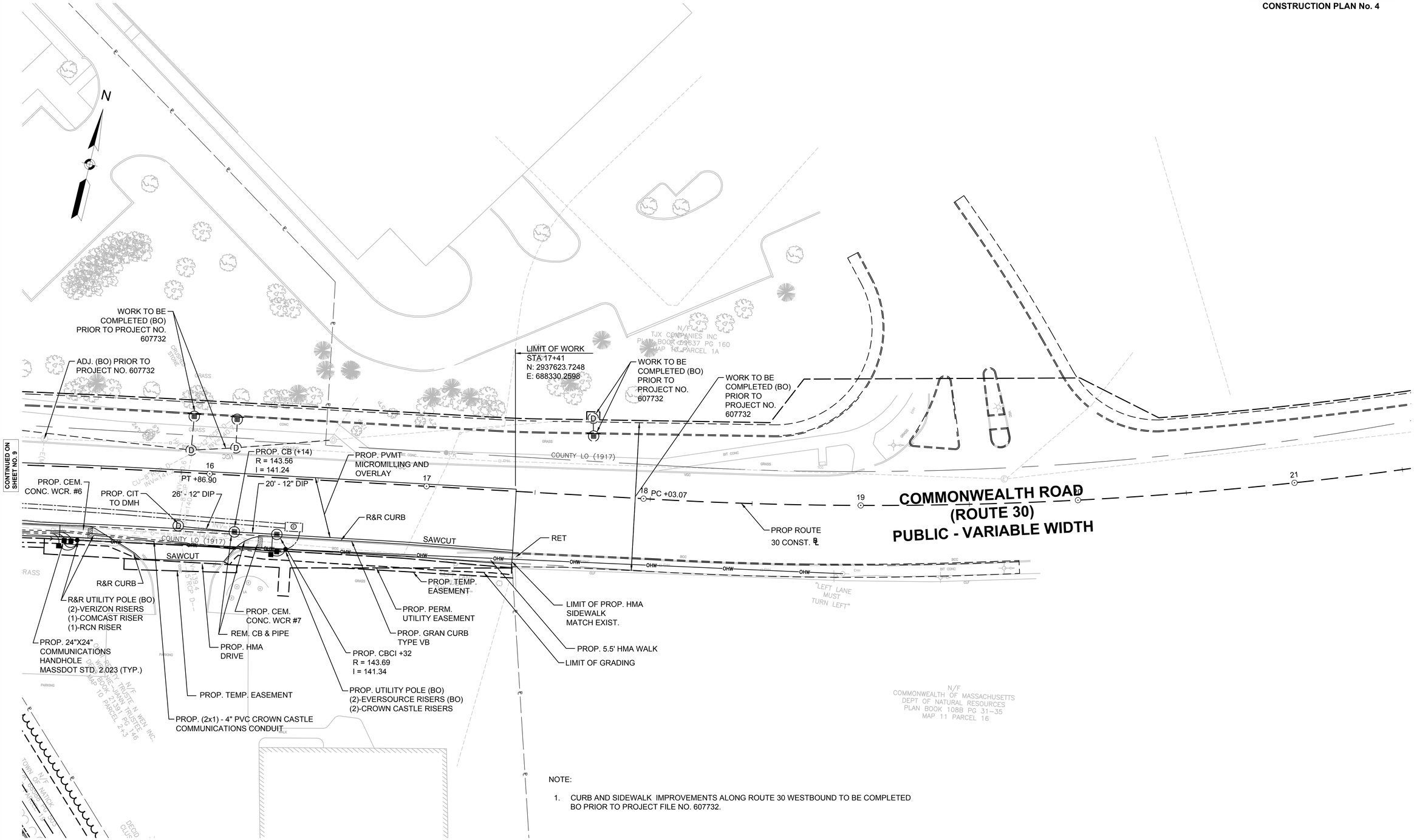

NOTE:

1. CURB AND SIDEWALK IMPROVEMENTS ALONG ROUTE 30 WESTBOUND TO BE COMPLETED BO PRIOR TO PROJECT FILE NO. 607732.

FOR PROFILE:
SEE SHEET NO. 68

4576 CONST PLANS 1-16.DWG Plotted on 20-Aug-2018 11:08 AM

HIGHWAY GUARD DETAILS	TRAFFIC SIGNAL CONDUIT	WATER SUPPLY ALTERATIONS	DRAINAGE DETAILS
NONE	NONE	NONE	NONE

NATICK/FRAMINGHAM
COCHITUATE RAIL TRAIL

STATE	FED. AID PROJ. NO.	SHEET NO.	TOTAL SHEETS
MA	STP(TE)/TAP/CMQ-003S(206)	11	253
PROJECT FILE NO.	607732		

CONSTRUCTION PLAN No. 5

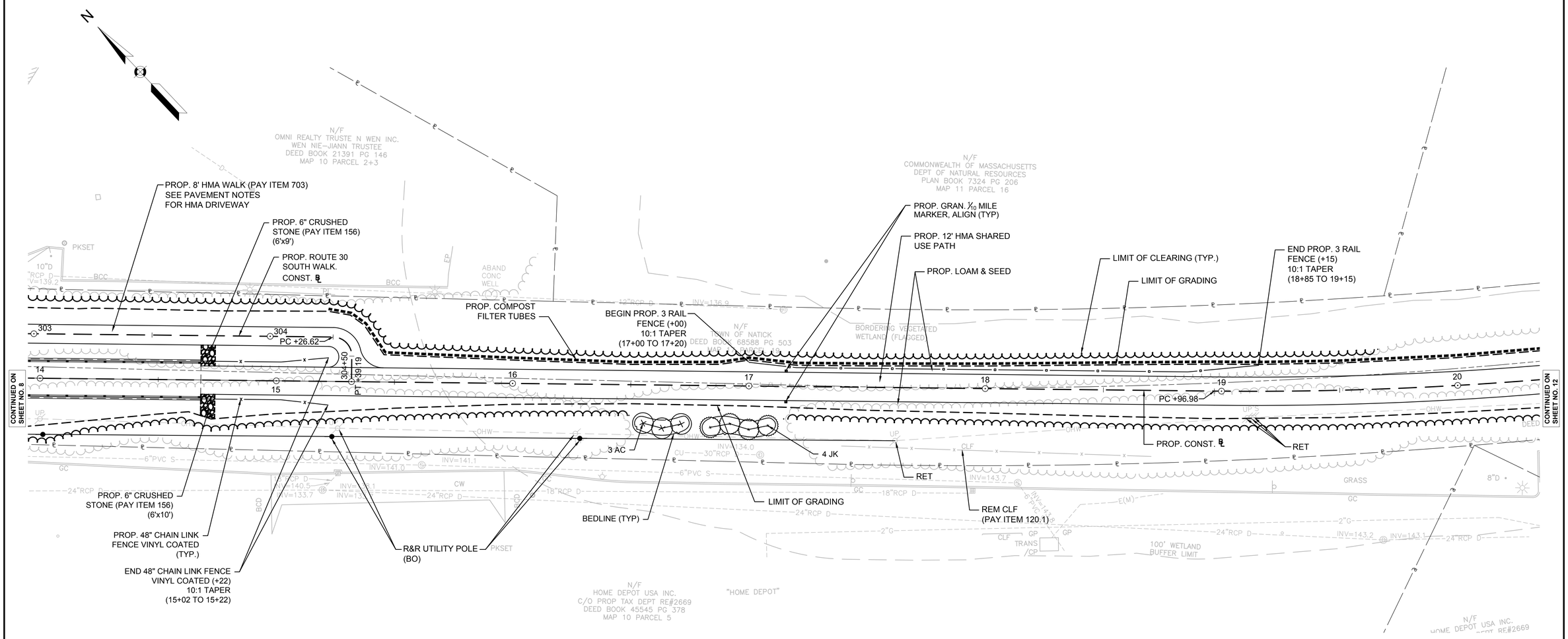

PLANT LIST - THIS SHEET					
SYM	QTY	BOTANICAL NAME	COMMON NAME	SIZE	REMARKS
TREES					
AC	3	Amelanchier canadensis 'Ace of Hearts'	Shadblow	8'-10'	B&B
JK	4	Juniperus chinensis 'Keteleeri'	Keteleeri Juniper	8'-9' Ht.	B&B

NOTE:
REFER TO SHEET 137 FOR TOTAL PLANT LIST.

0 20 50 100
SCALE: 1" = 20'

FOR PROFILE:
SEE SHEET NO. 40

4576 CONST PLANS 1-16.DWG Plotted on 20-Aug-2018 11:08 AM

HIGHWAY GUARD DETAILS	TRAFFIC SIGNAL CONDUIT	WATER SUPPLY ALTERATIONS	DRAINAGE DETAILS
NONE	NONE	NONE	NONE

NATICK/FRAMINGHAM
COCHITUATE RAIL TRAIL

STATE	FED. AID PROJ. NO.	SHEET NO.	TOTAL SHEETS
MA	STP(TE)/TAP/CMQ-003S(206)	12	253
PROJECT FILE NO.	607732		

CONSTRUCTION PLAN No. 6

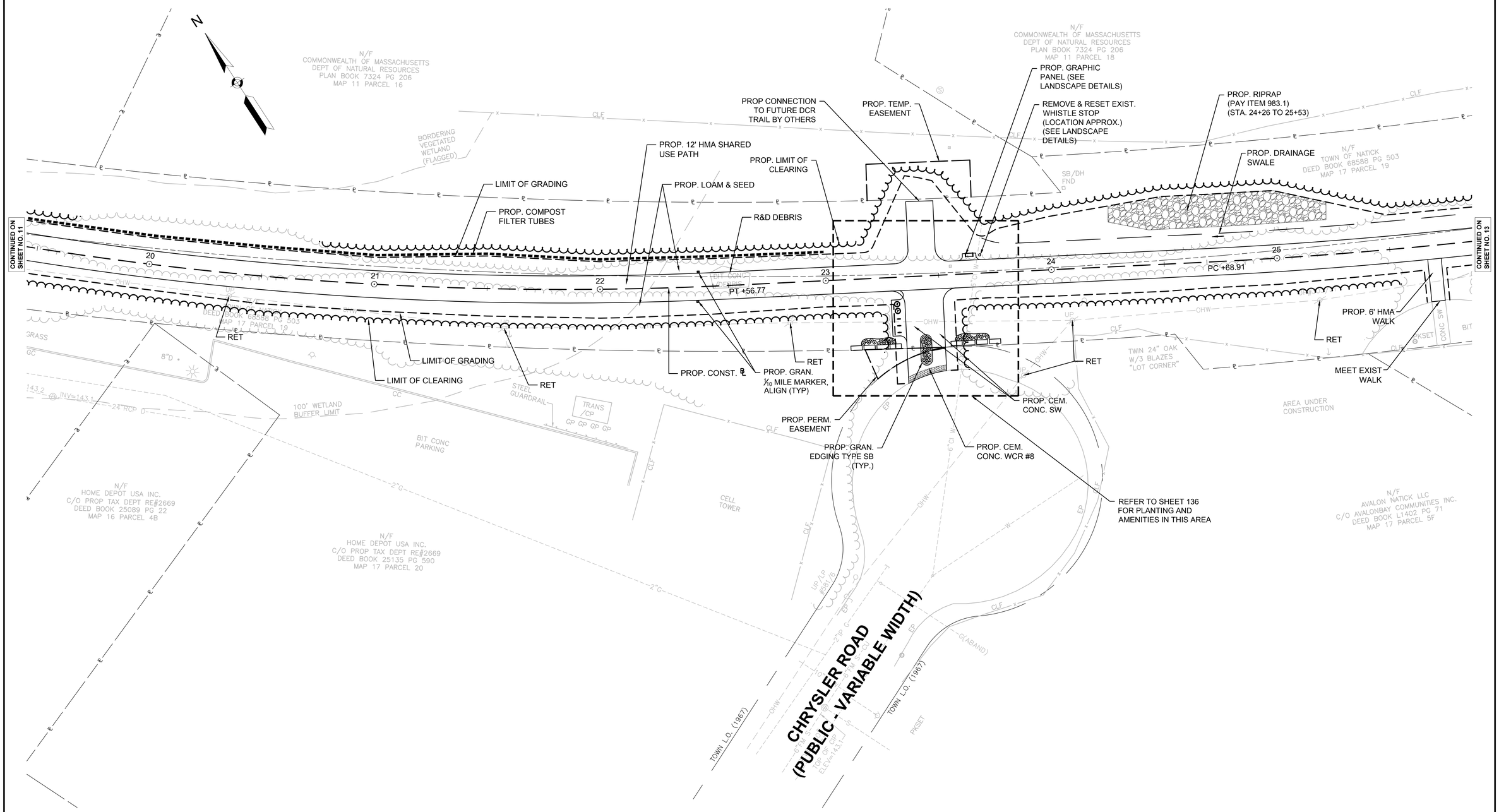

FOR PROFILE:
SEE SHEET NO. 41

4576 CONST PLANS 1-16.DWG Plotted on 20-Aug-2018 11:08 AM

HIGHWAY GUARD DETAILS	TRAFFIC SIGNAL CONDUIT	WATER SUPPLY ALTERATIONS	DRAINAGE DETAILS
NONE	SEE BELOW	NONE	SEE BELOW

NATICK/FRAMINGHAM
COCHITUATE RAIL TRAIL

STATE	FED. AID PROJ. NO.	SHEET NO.	TOTAL SHEETS
MA	STP(TE)/TAP/CMQ-003S(206)	13	253
PROJECT FILE NO.	607732		

CONSTRUCTION PLAN No. 7

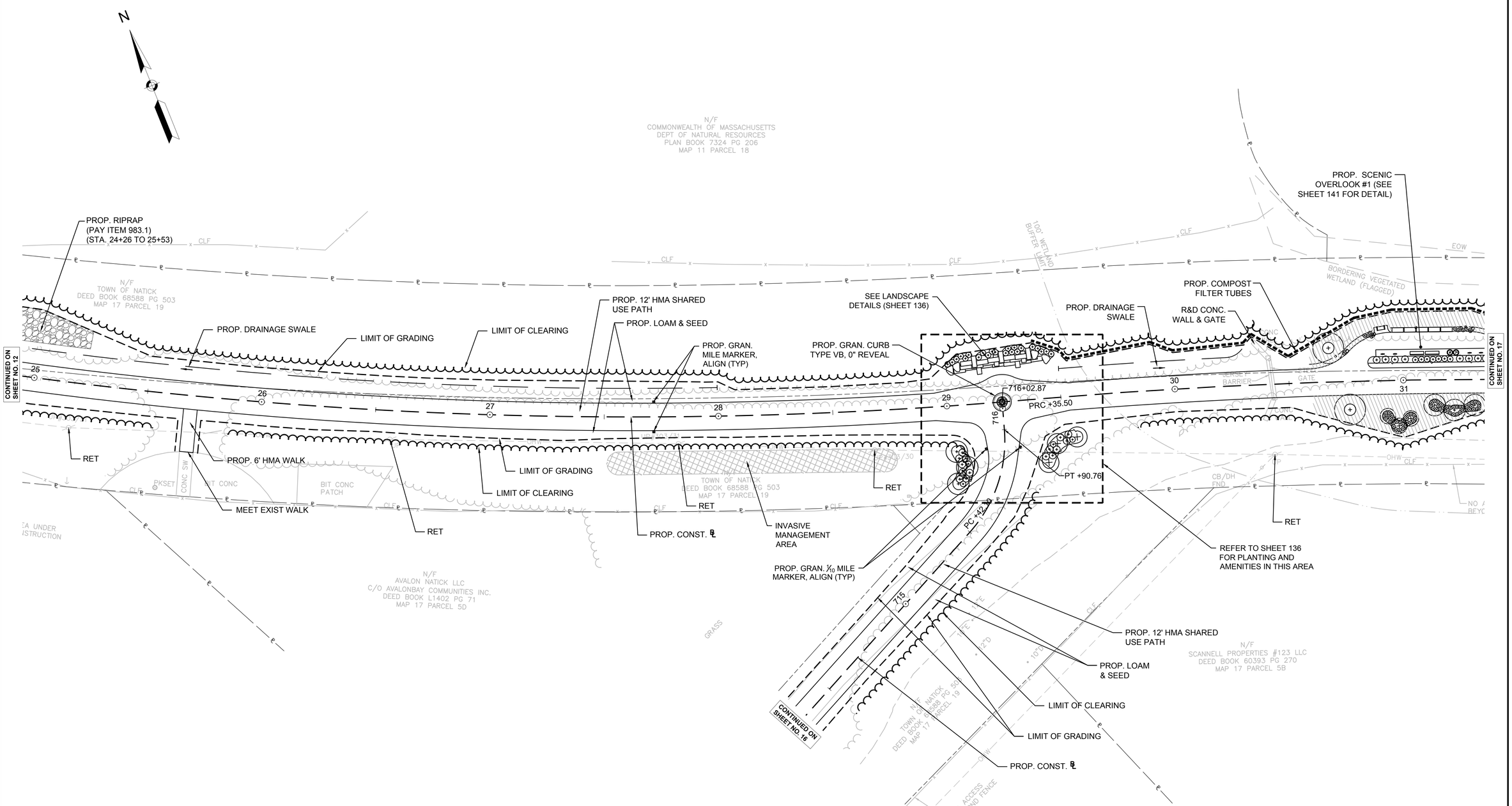

FOR PROFILE:
SEE SHEET NOS. 42 & 64

4576 CONST PLANS 1-16.DWG Plotted on 20-Aug-2018 11:08 AM

HIGHWAY GUARD DETAILS

NONE

TRAFFIC SIGNAL CONDUIT

SEE TRAFFIC SIGNAL PLAN

WATER SUPPLY ALTERATIONS

NONE

DRAINAGE DETAILS

NONE

NATICK/FRAMINGHAM COCHITUATE RAIL TRAIL

STATE	FED. AID PROJ. NO.	SHEET NO.	TOTAL SHEETS
MA	STP(TE)/TAP/CMQ-003S(206)	14	253
PROJECT FILE NO.	607732		

CONSTRUCTION PLAN No. 8

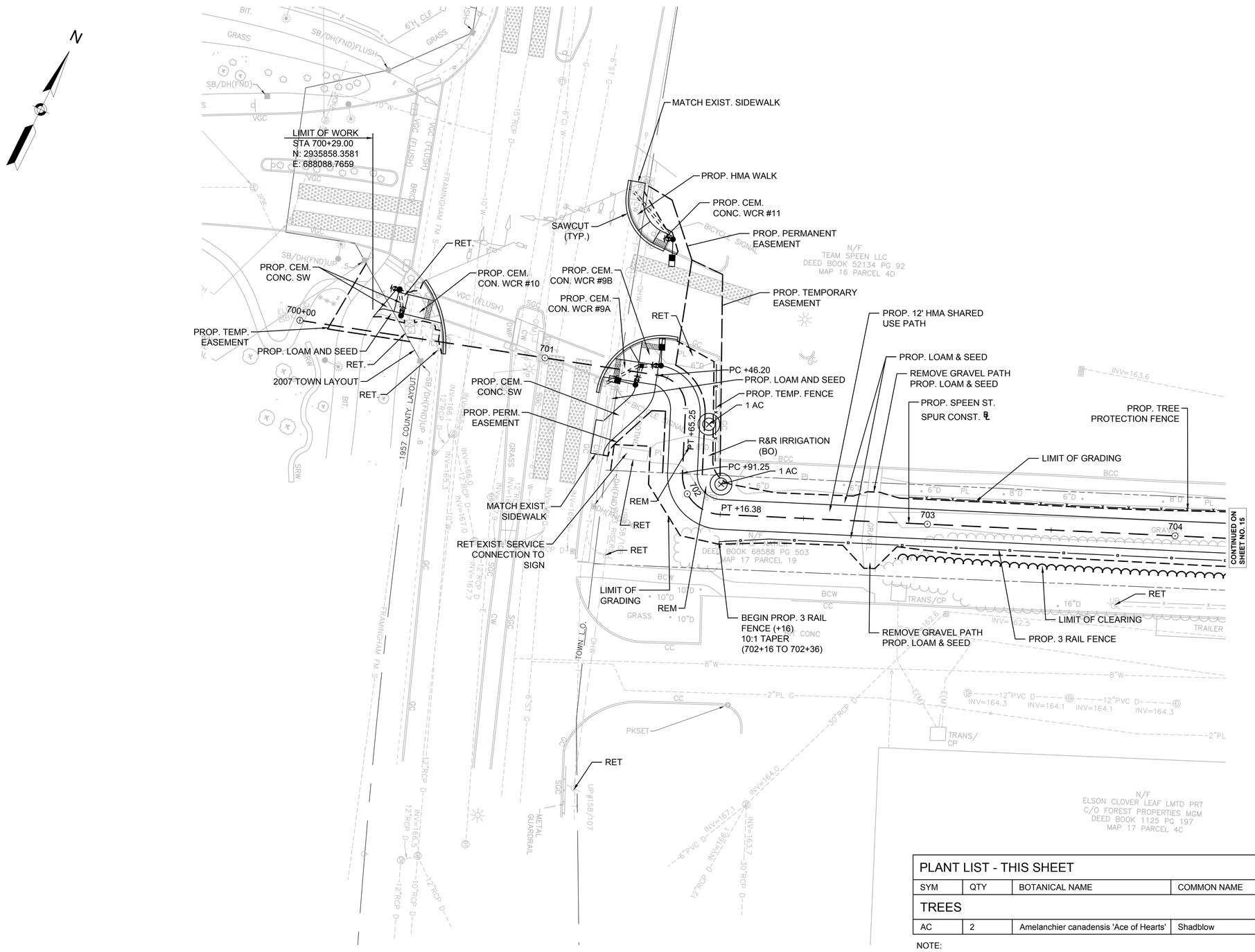

PLANT LIST - THIS SHEET					
SYM	QTY	BOTANICAL NAME	COMMON NAME	SIZE	REMARKS
TREES					
AC	2	Amelanchier canadensis 'Ace of Hearts'	Shadblow	8'-10'	B&B

NOTE:
REFER TO SHEET 137 FOR TOTAL PLANT LIST.

0 20 50 100

SCALE: 1" = 20'

FOR PROFILE:
SEE SHEET NO. 62

4576 CONST PLANS 1-16.DWG Plotted on 20-Aug-2018 11:08 AM

HIGHWAY GUARD DETAILS	TRAFFIC SIGNAL CONDUIT	WATER SUPPLY ALTERATIONS	DRAINAGE DETAILS
NONE	NONE	NONE	NONE

NATICK/FRAMINGHAM
COCHITUATE RAIL TRAIL

STATE	FED. AID PROJ. NO.	SHEET NO.	TOTAL SHEETS
MA	STP(TE)/TAP/CMQ-003S(206)	15	253
PROJECT FILE NO.	607732		

CONSTRUCTION PLAN No. 9

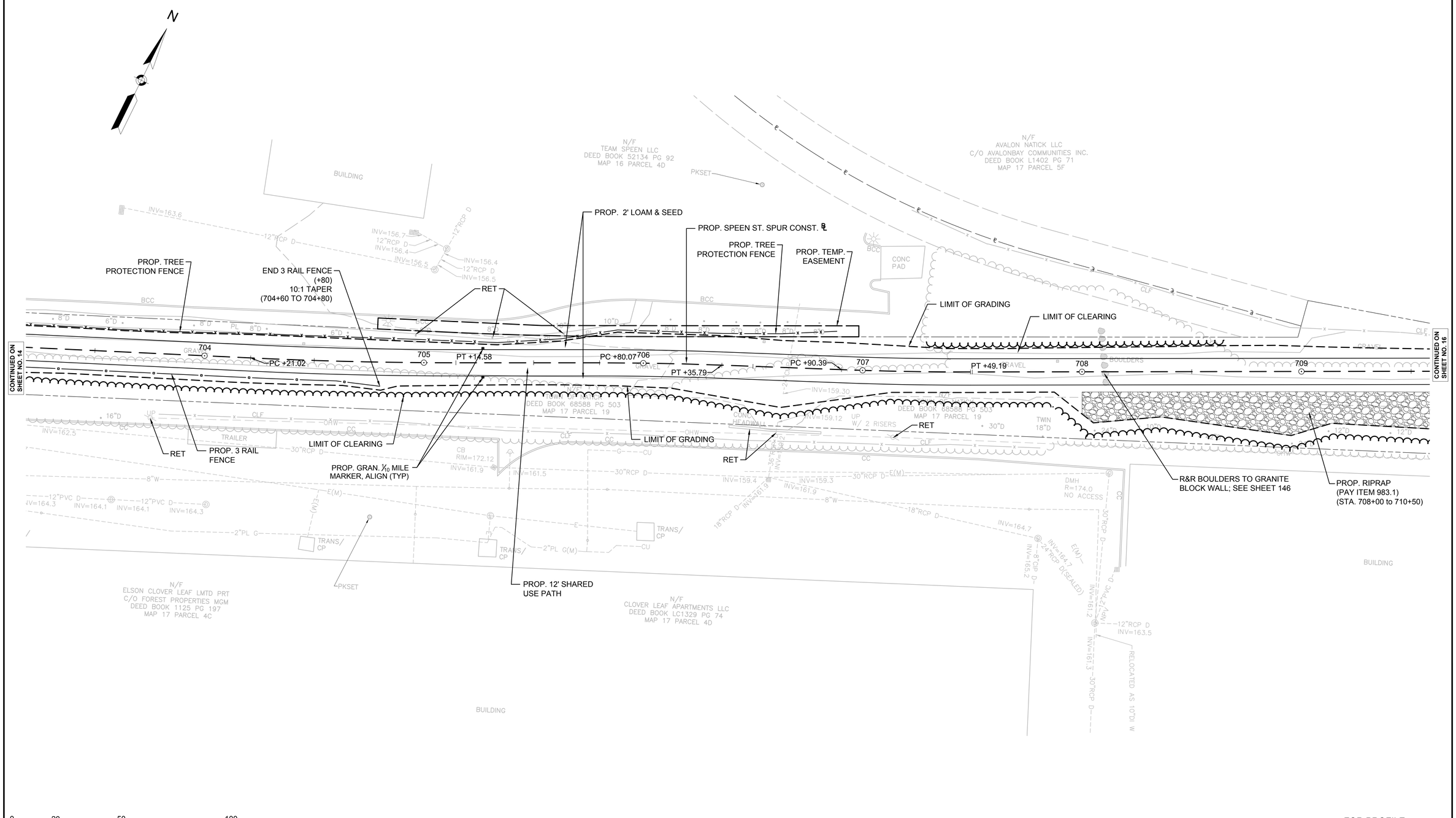

FOR PROFILE:
SEE SHEET NOS. 62-63

4576 CONST PLANS 1-16.DWG Plotted on 20-Aug-2018 11:08 AM

HIGHWAY GUARD DETAILS	TRAFFIC SIGNAL CONDUIT	WATER SUPPLY ALTERATIONS	DRAINAGE DETAILS
NONE	NONE	NONE	NONE

NATICK/FRAMINGHAM
COCHITUATE RAIL TRAIL

STATE	FED. AID PROJ. NO.	SHEET NO.	TOTAL SHEETS
MA	STP(TE)/TAP/CMQ-003S(206)	16	253
PROJECT FILE NO.	607732		

CONSTRUCTION PLAN No. 10

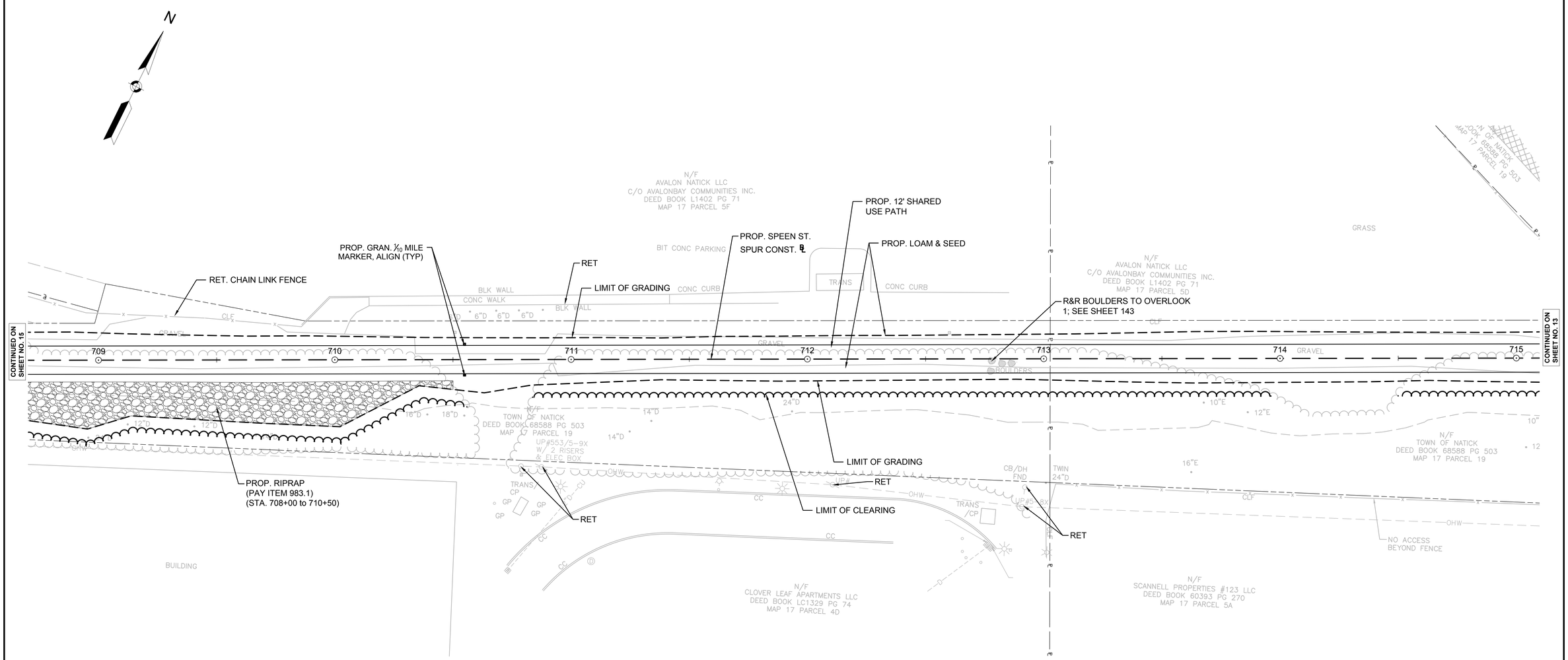

0 20 50 100
SCALE: 1" = 20'

FOR PROFILE:
SEE SHEET NOS. 63-64

4576 CONST PLANS 1-16.DWG Plotted on 20-Aug-2018 11:09 AM

CONFORMS TO ADDENDUM NO. 3 NOVEMBER 21, 2018

HIGHWAY GUARD DETAILS	TRAFFIC SIGNAL CONDUIT	WATER SUPPLY ALTERATIONS	DRAINAGE DETAILS
NONE	NONE	NONE	SEE BELOW

NATICK/FRAMINGHAM
COCHITUATE RAIL TRAIL

STATE	FED. AID PROJ. NO.	SHEET NO.	TOTAL SHEETS
MA	STP(TE)/TAP/CMQ-003S(206)	17	253
PROJECT FILE NO.	607732		

CONSTRUCTION PLAN No. 11

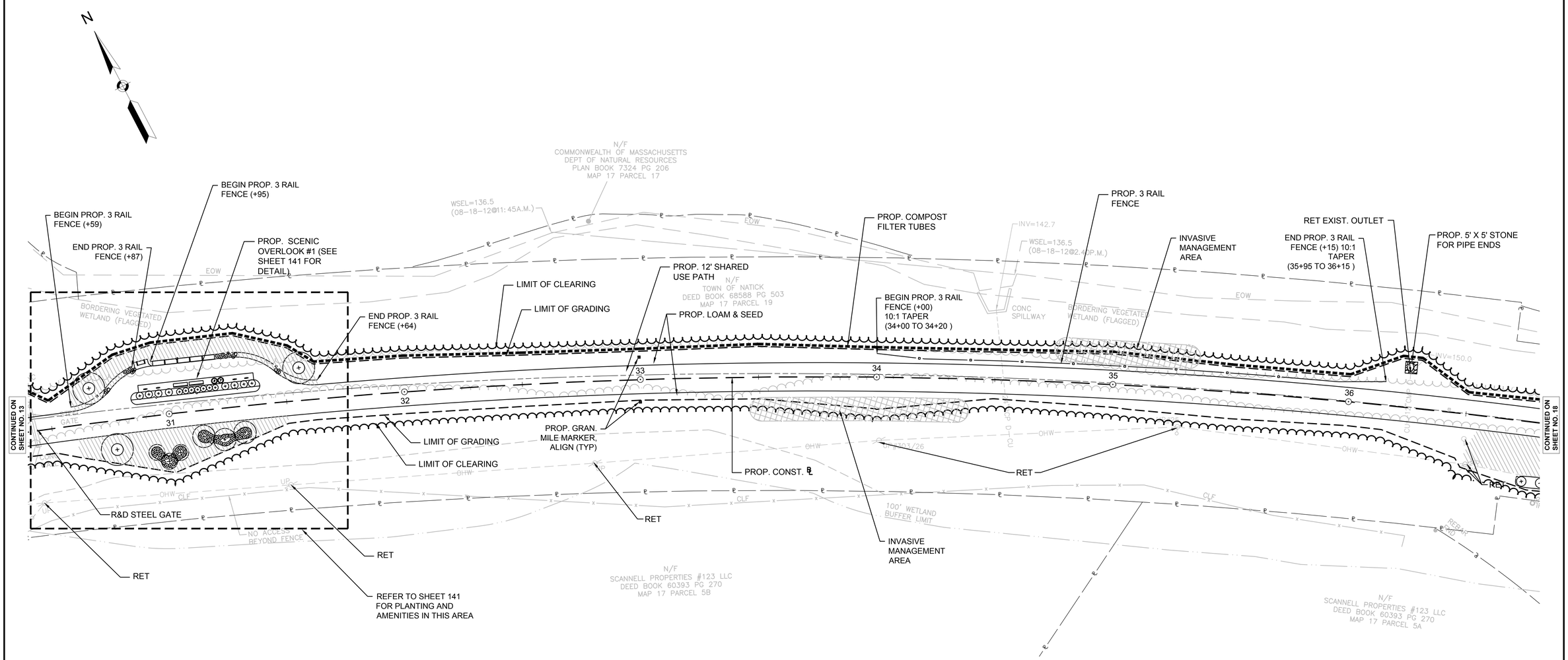

0 20 50 100
SCALE: 1" = 20'

FOR PROFILE:
SEE SHEET NOS. 43

4576 CONST PLANS 1-16.DWG Plotted on 20-Aug-2018 11:09 AM

HIGHWAY GUARD DETAILS	TRAFFIC SIGNAL CONDUIT	WATER SUPPLY ALTERATIONS	DRAINAGE DETAILS
NONE	NONE	NONE	SEE BELOW

NATICK/FRAMINGHAM
COCHITUATE RAIL TRAIL

STATE	FED. AID PROJ. NO.	SHEET NO.	TOTAL SHEETS
MA	STP(TE)/TAP/CMQ-003S(206)	18	253
PROJECT FILE NO.	607732		

CONSTRUCTION PLAN No. 12

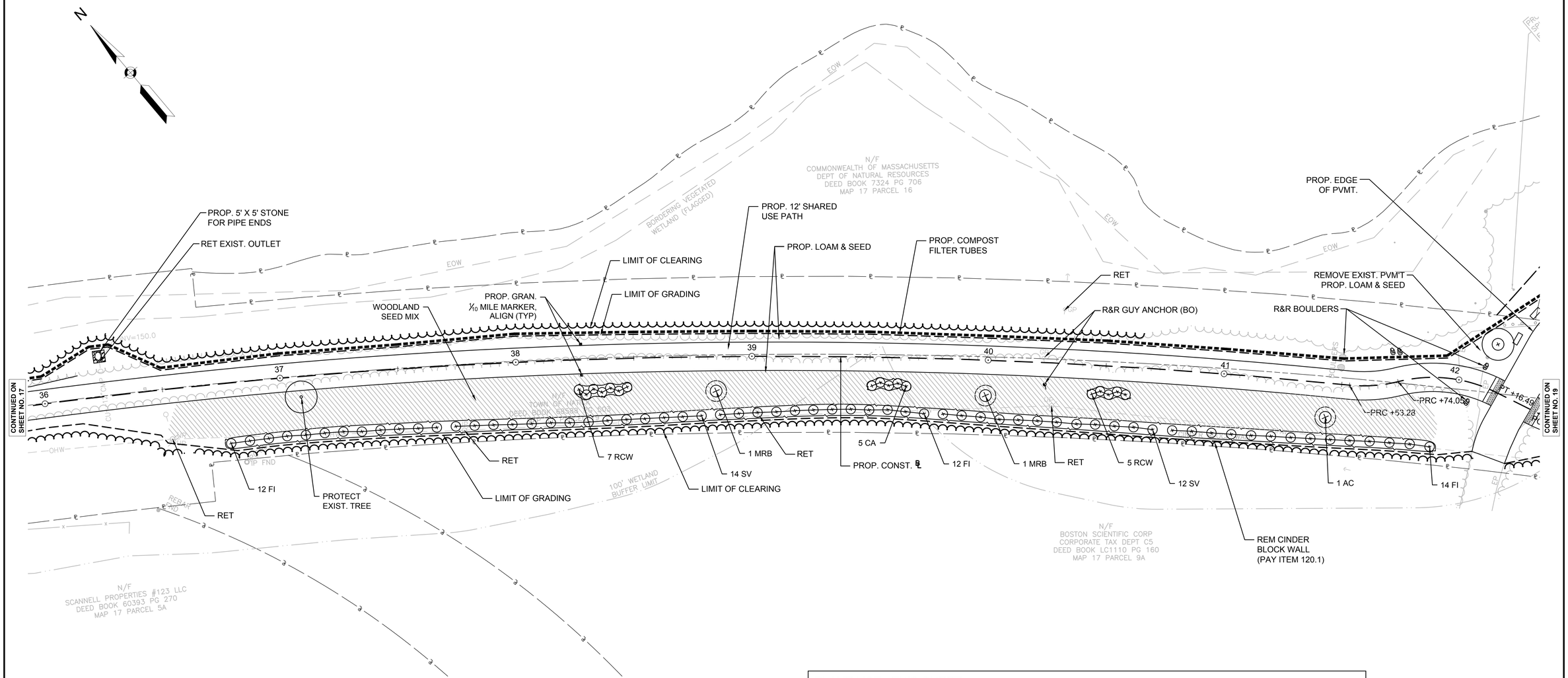

PLANT LIST - THIS SHEET					
SYM	QTY	BOTANICAL NAME	COMMON NAME	SIZE	REMARKS
TREES					
AC	1	Amelanchier canadensis 'Ace of Hearts'	Shadblow	8'-10'	B&B
MRB	2	Malus x 'Red Baron'	Red Baron Crabapple	1.5"-2" Cal.	B&B
SHRUBS					
CA	5	Clethra alnifolia	Summersweet	3'-4'	B&B
FI	38	Forsythia intermedia	Forsythia	3'-4'	B&B
RCW	12	Rhododendron 'Cunningham's White'	Cunningham's White Rhododendron	3'-4'	B&B
SV	26	Syringa x 'Penda'	Lilac	3'-4'	B&B

NOTE:
REFER TO SHEET 137 FOR TOTAL PLANT LIST.

0 20 50 100
SCALE: 1" = 20'

FOR PROFILE:
SEE SHEET NO. 44

4576 CONST PLANS 1-16.DWG Plotted on 20-Aug-2018 11:09 AM

HIGHWAY GUARD DETAILS	TRAFFIC SIGNAL CONDUIT	WATER SUPPLY ALTERATIONS	DRAINAGE DETAILS
NONE	NONE	NONE	NONE

NATICK/FRAMINGHAM
COCHITUATE RAIL TRAIL

STATE	FED. AID PROJ. NO.	SHEET NO.	TOTAL SHEETS
MA	STP(TE)/TAP/CMQ-003S(206)	19	253
PROJECT FILE NO.	607732		

CONSTRUCTION PLAN No. 13

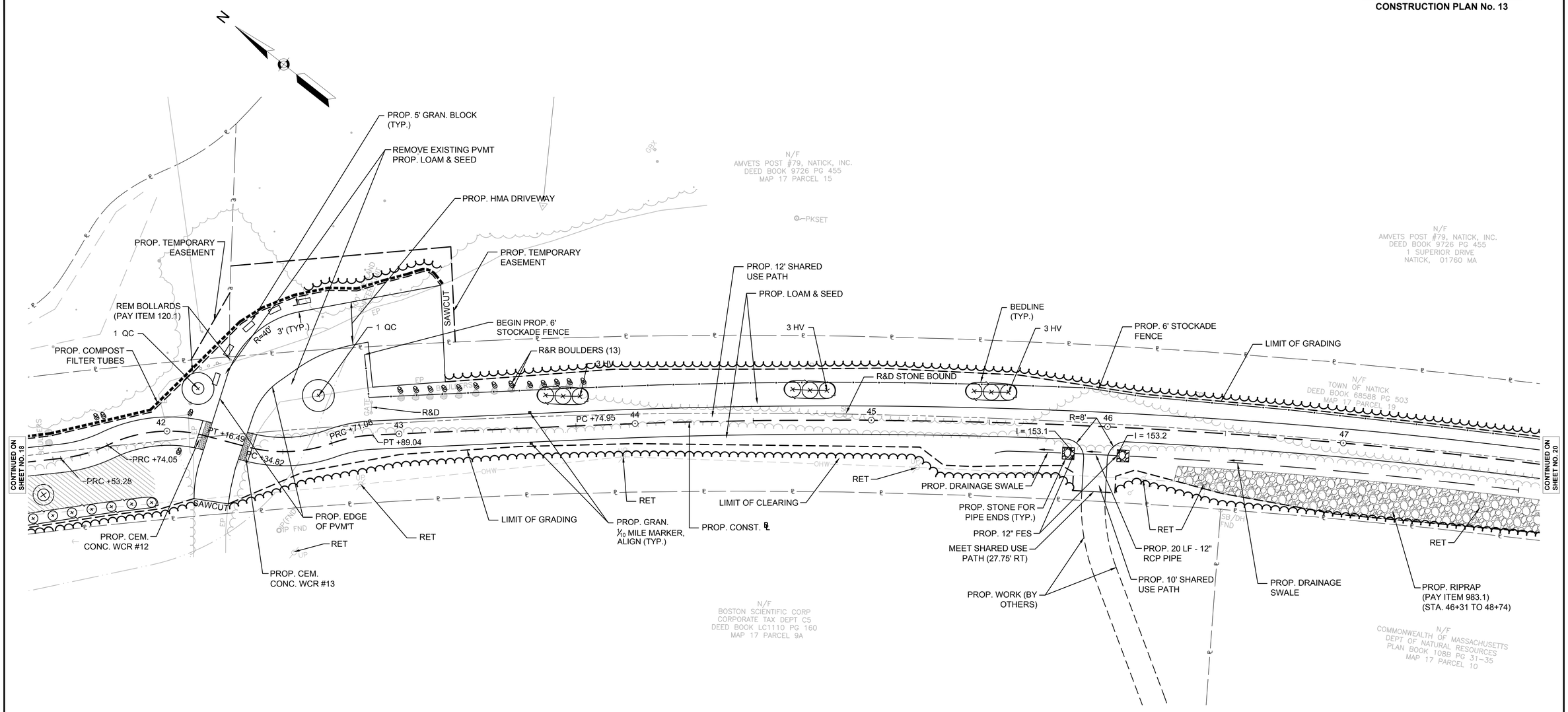

PLANT LIST - THIS SHEET

SYM	QTY	BOTANICAL NAME	COMMON NAME	SIZE	REMARKS
TREES AND SHRUBS					
HV	9	Hamamelis virginiana	Witch Hazel	3'-4'	Cont.
QC	2	Quercus palustris	Pin Oak	2"-2.5" Cal.	B&B

NOTE:
REFER TO SHEET 137 FOR TOTAL PLANT LIST.

0 20 50 100
SCALE: 1" = 20'

FOR PROFILE:
SEE SHEET NO. 45-46

4576 CONST PLANS 1-16.DWG Plotted on 20-Aug-2018 11:09 AM

HIGHWAY GUARD DETAILS	TRAFFIC SIGNAL CONDUIT	WATER SUPPLY ALTERATIONS	DRAINAGE DETAILS
NONE	SEE BELOW	NONE	SEE BELOW

NATICK/FRAMINGHAM
COCHITUATE RAIL TRAIL

STATE	FED. AID PROJ. NO.	SHEET NO.	TOTAL SHEETS
MA	STP(TE)/TAP/CMQ-003S(206)	20	253
PROJECT FILE NO.	607732		

CONSTRUCTION PLAN No. 14

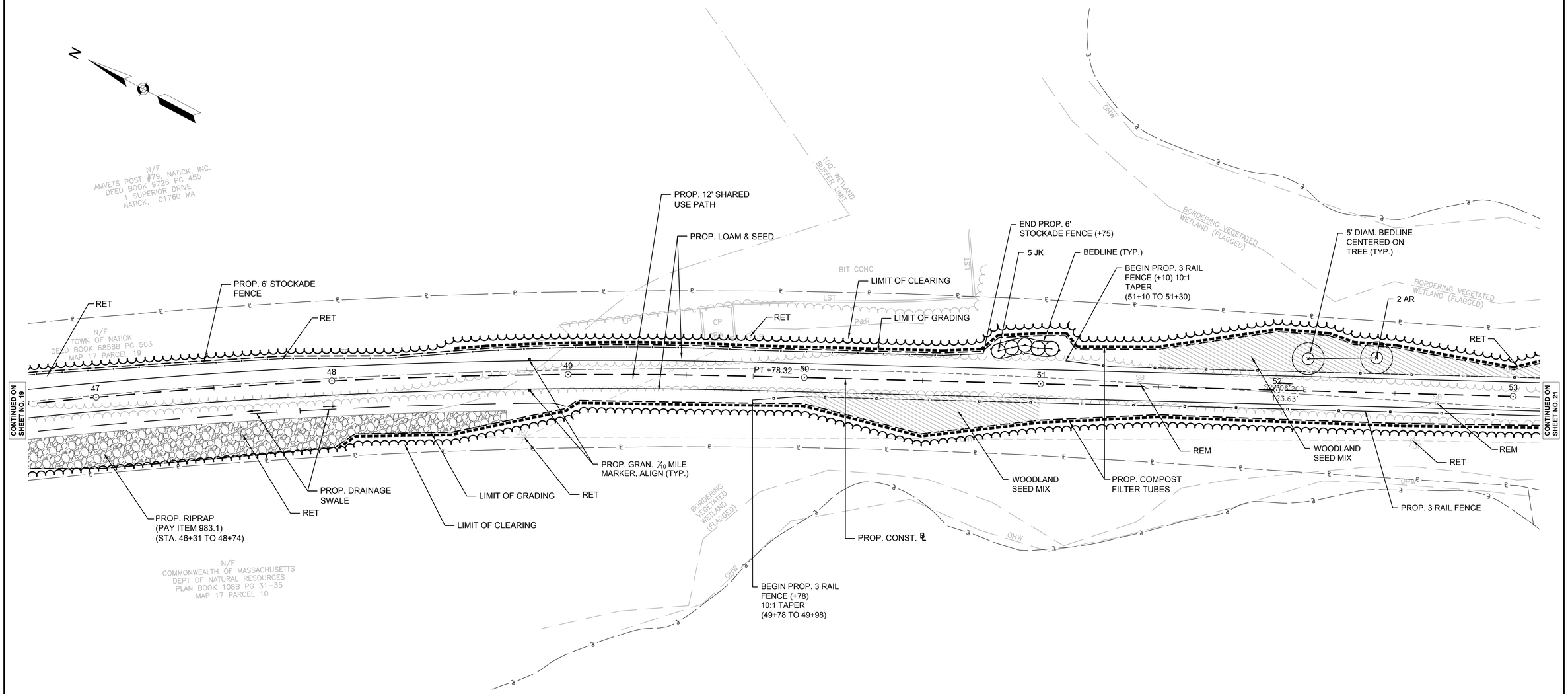

PLANT LIST - THIS SHEET					
SYM	QTY	BOTANICAL NAME	COMMON NAME	SIZE	REMARKS
TREES					
AR	2	Acer rubrum 'October Glory'	Red Maple	2"-2.5" Cal.	B&B
JK	5	Juniperus chinensis 'Keteleeri"	Keteleeri Juniper	8'-9' Ht.	B&B

NOTE:
REFER TO SHEET 137 FOR TOTAL PLANT LIST.

0 20 50 100
SCALE: 1" = 20'

FOR PROFILE:
SEE SHEET NO. 46

4576 CONST PLANS 1-16.DWG Plotted on 20-Aug-2018 11:09 AM

CONFORMS TO ADDENDUM NO. 3 NOVEMBER 21, 2018

HIGHWAY GUARD DETAILS	TRAFFIC SIGNAL CONDUIT	WATER SUPPLY ALTERATIONS	DRAINAGE DETAILS
NONE	NONE	NONE	NONE

NATICK/FRAMINGHAM
COCHITUATE RAIL TRAIL

STATE	FED. AID PROJ. NO.	SHEET NO.	TOTAL SHEETS
MA	STP(TE)/TAP/CMQ-003S(206)	21	253
PROJECT FILE NO.	607732		

CONSTRUCTION PLAN No. 15

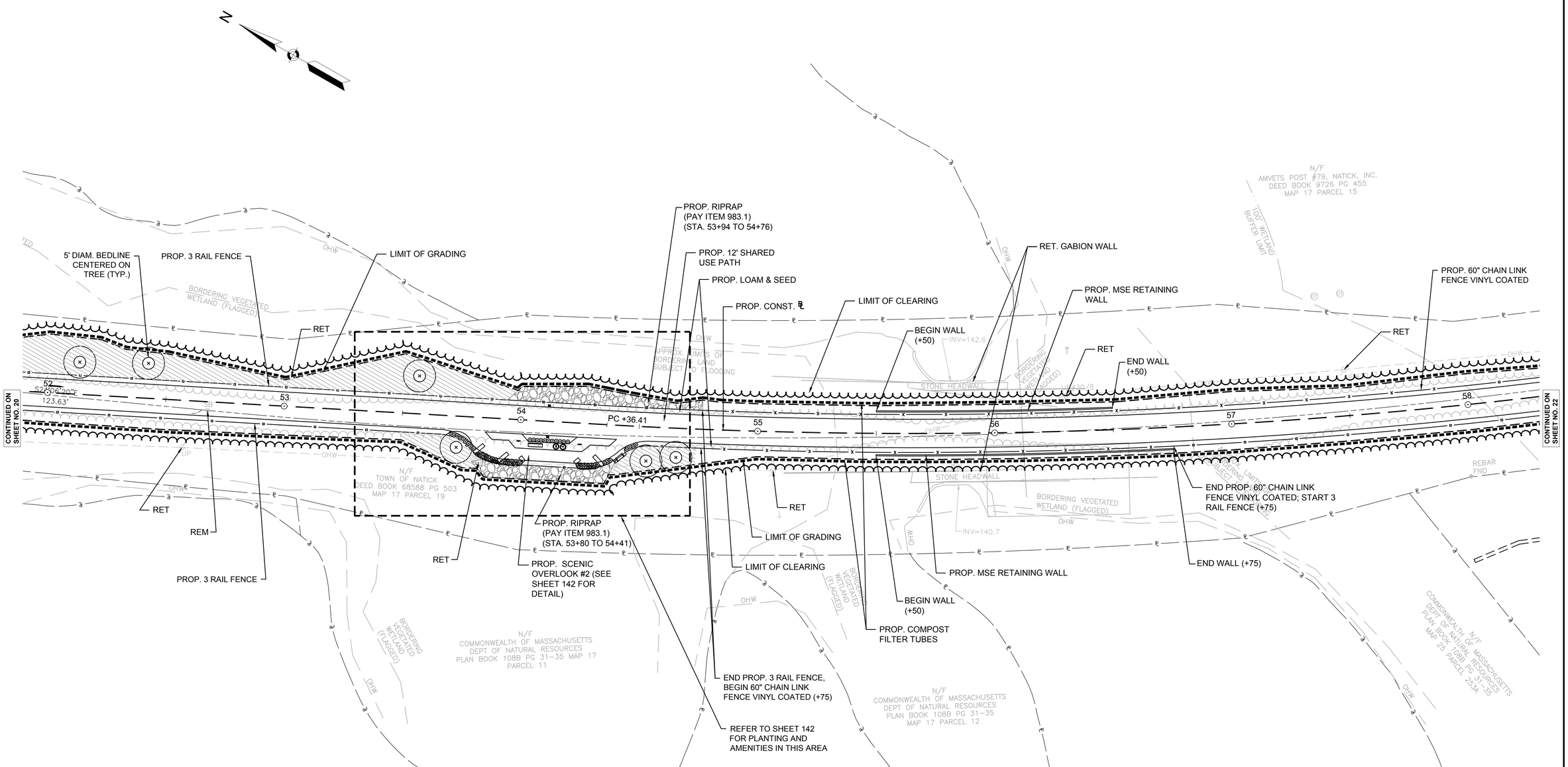

0 20 50 100
SCALE: 1" = 20'

FOR PROFILE:
SEE SHEET NOS. 46-47

4576 CONST PLANS 1-16.DWG Plotted on 20-Aug-2018 11:09 AM

HIGHWAY GUARD DETAILS	TRAFFIC SIGNAL CONDUIT	WATER SUPPLY ALTERATIONS	DRAINAGE DETAILS
NONE	NONE	NONE	NONE

NATICK/FRAMINGHAM
COCHITUATE RAIL TRAIL

STATE	FED. AID PROJ. NO.	SHEET NO.	TOTAL SHEETS
MA	STP(TE)/TAP/CMQ-003S(206)	22	253
PROJECT FILE NO.	607732		

CONSTRUCTION PLAN No. 16

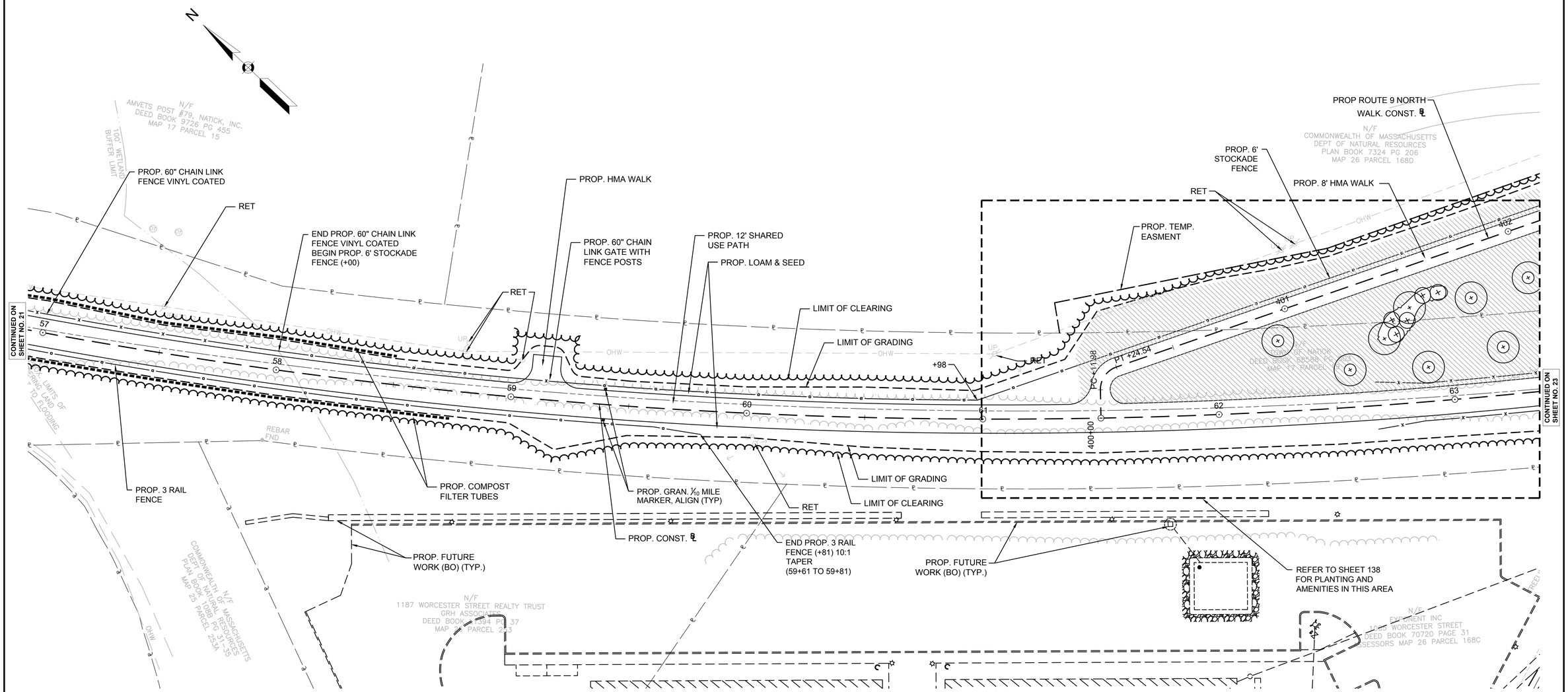

0 20 50 100
SCALE: 1" = 20'

FOR PROFILE:
SEE SHEET NOS. 47-48 & 65

4576 CONST PLANS 1-16.DWG Plotted on 20-Aug-2018 11:10 AM

HIGHWAY GUARD DETAILS

GUARD RAIL TL-3 (SINGLE FACED)
STA 11+00 RT (TANGENT END TREATMENT) TO
STA 13+25 RT (T.S.)
STA 11+40 LT (T.S.) TO
STA 12+85 LT (TANGENT END TREATMENT)

TRAFFIC SIGNAL CONDUIT

NONE

WATER SUPPLY ALTERATIONS

SEE BELOW

DRAINAGE DETAILS

NONE

NATICK/FRAMINGHAM
COCHITUATE RAIL TRAIL

STATE	FED. AID PROJ. NO.	SHEET NO.	TOTAL SHEETS
MA	STP(TE)/TAP/CMQ-003S(206)	23	253
PROJECT FILE NO.		607732	

CONSTRUCTION PLAN No. 17

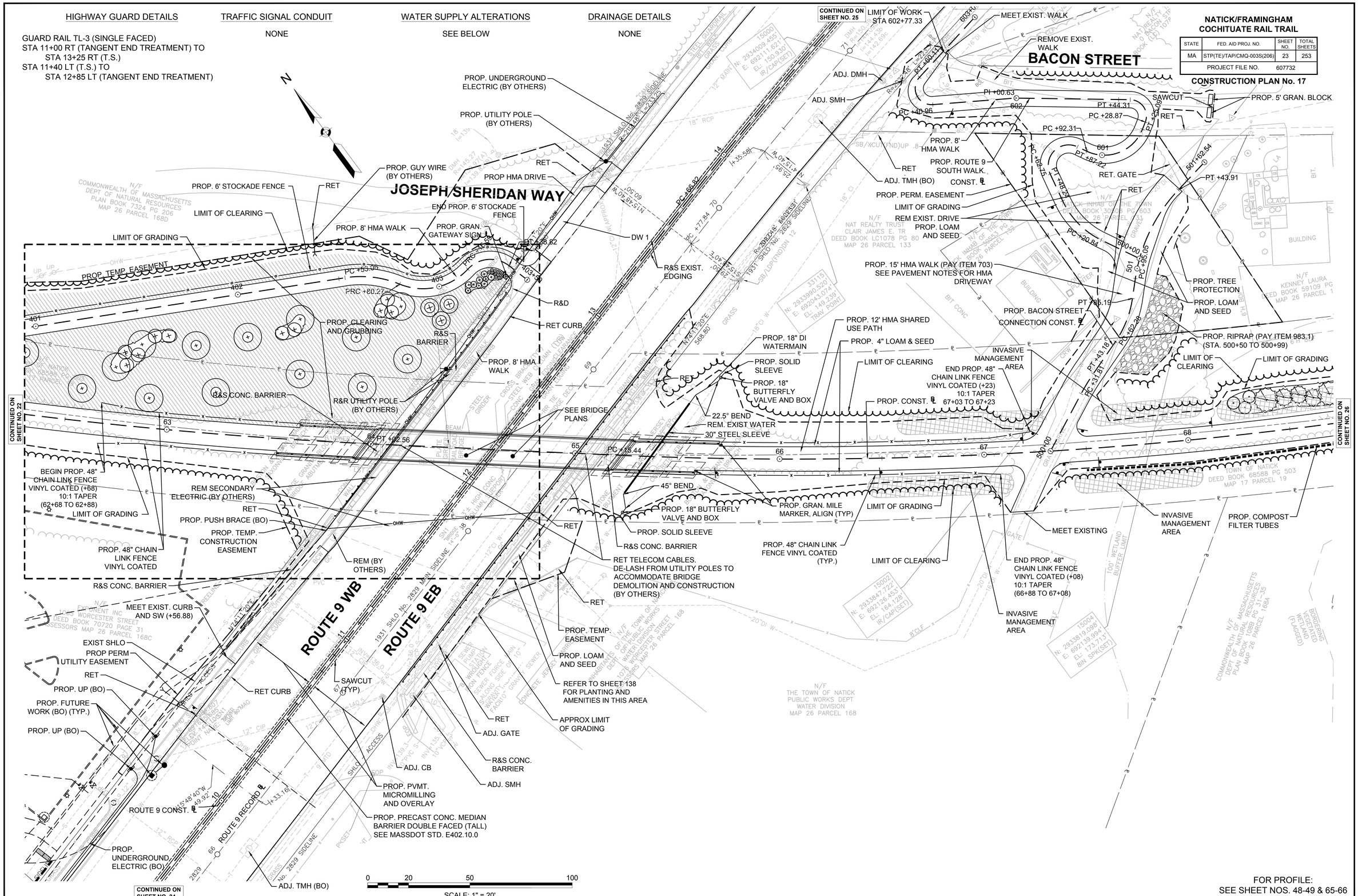

FOR PROFILE:
SEE SHEET NOS. 48-49 & 65-66

4576 CONST PLANS 17-31.DWG Plotted on 20-Aug-2018 11:10 AM

HIGHWAY GUARD DETAILS	TRAFFIC SIGNAL CONDUIT	WATER SUPPLY ALTERATIONS	DRAINAGE DETAILS
NONE	NONE	NONE	NONE

NATICK/FRAMINGHAM
COCHITUATE RAIL TRAIL

STATE	FED. AID PROJ. NO.	SHEET NO.	TOTAL SHEETS
MA	STP(TE)/TAP/CMQ-003S(206)	24	253
PROJECT FILE NO.	607732		

CONSTRUCTION PLAN No. 18

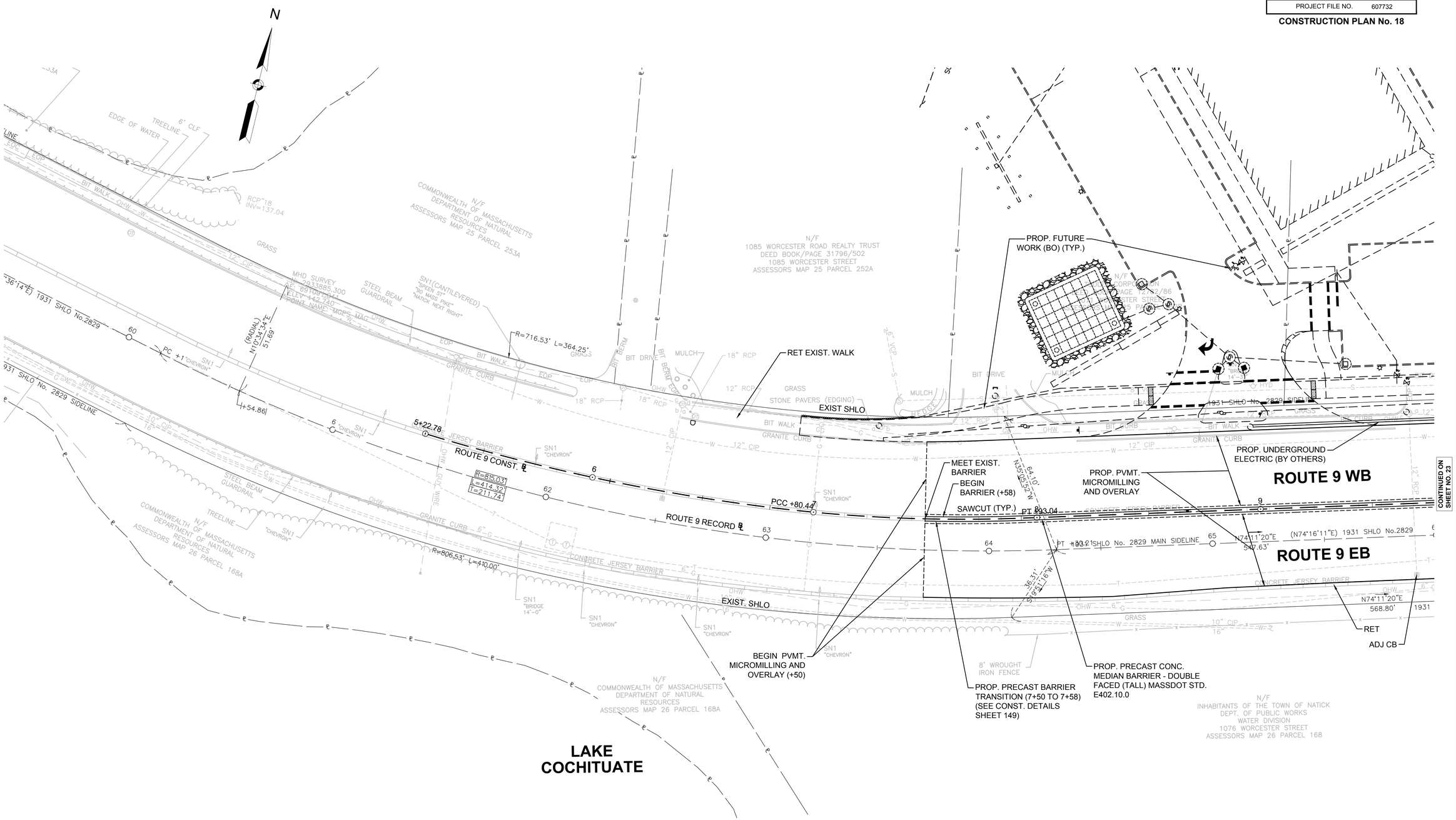

4576 CONST PLANS 17-31.DWG Plotted on 20-Aug-2018 11:10 AM

HIGHWAY GUARD DETAILS

TRANSITION TO RIGID BARRIER (DOUBLE FACED) STA 17+77 (CONNECT TO PROP. CONC. MEDIAN BARRIER) TO STA 18+23 (CONNECT TO PROP. TRANSITION TO NCHRP 350 GUARDRAIL)

TRANSITION TO NCHRP 350 GUARDRAIL STA 18+23 (CONNECT TO TRANSITION TO RIGID BARRIER [DOUBLE FACED]) TO STA 18+58 (CONNECT TO EXIST. HWY. GD.)

TRAFFIC SIGNAL CONDUIT

NONE

WATER SUPPLY ALTERATIONS

NONE

DRAINAGE DETAILS

NONE

NATICK/FRAMINGHAM
COCHITUATE RAIL TRAIL

STATE	FED. AID PROJ. NO.	SHEET NO.	TOTAL SHEETS
MA	STP(TE)/TAP/CMQ-003S(206)	25	253
PROJECT FILE NO.	607732		

CONSTRUCTION PLAN No. 19

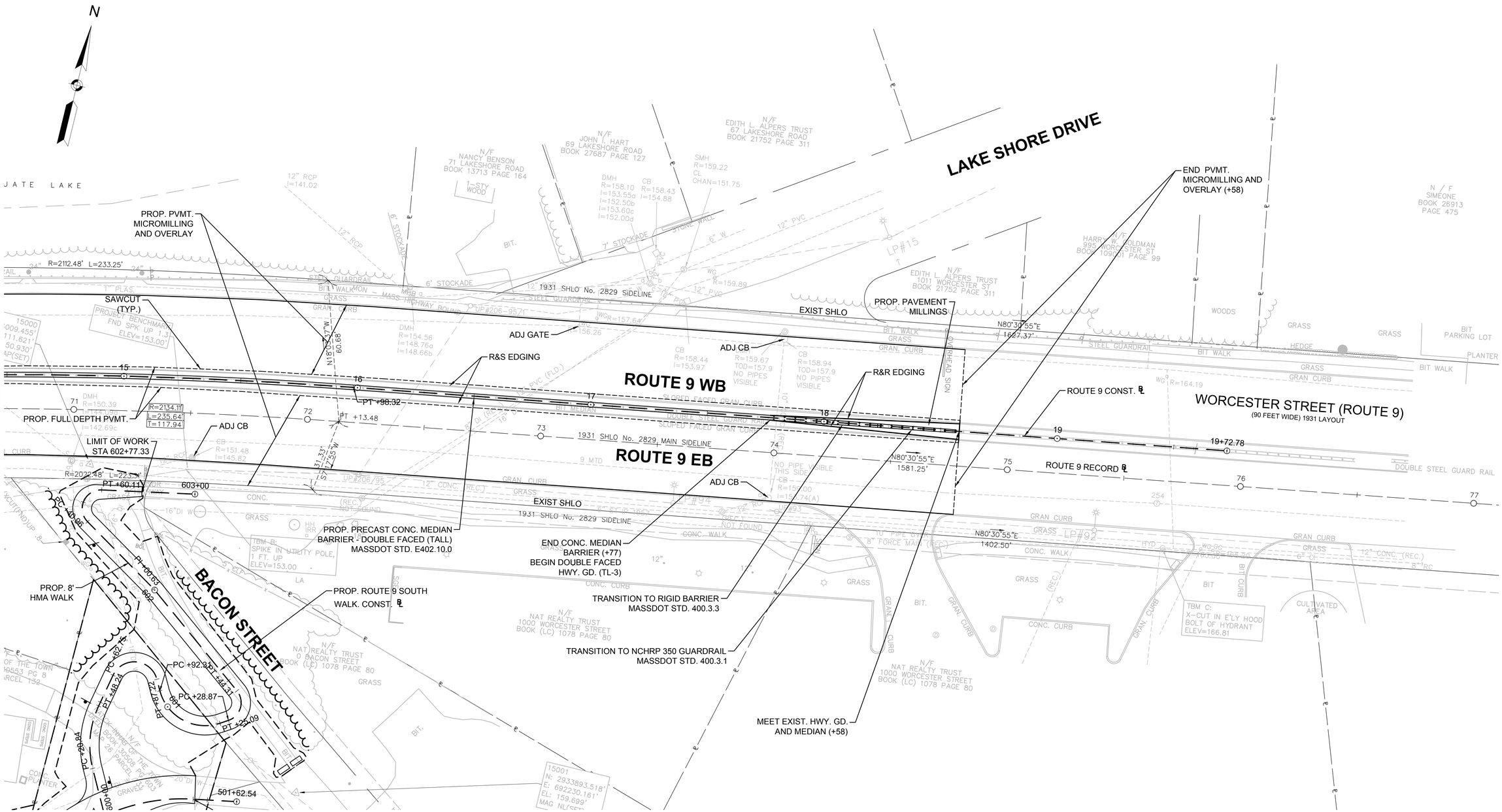

4576 CONST PLANS 17-31.DWG Plotted on 31-Aug-2018 10:11 AM

HIGHWAY GUARD DETAILS	TRAFFIC SIGNAL CONDUIT	WATER SUPPLY ALTERATIONS	DRAINAGE DETAILS
NONE	NONE	NONE	NONE

NATICK/FRAMINGHAM
COCHITUATE RAIL TRAIL

STATE	FED. AID PROJ. NO.	SHEET NO.	TOTAL SHEETS
MA	STP(TE)/TAP/CMQ-003S(206)	26	253
PROJECT FILE NO.	607732		

CONSTRUCTION PLAN No. 20

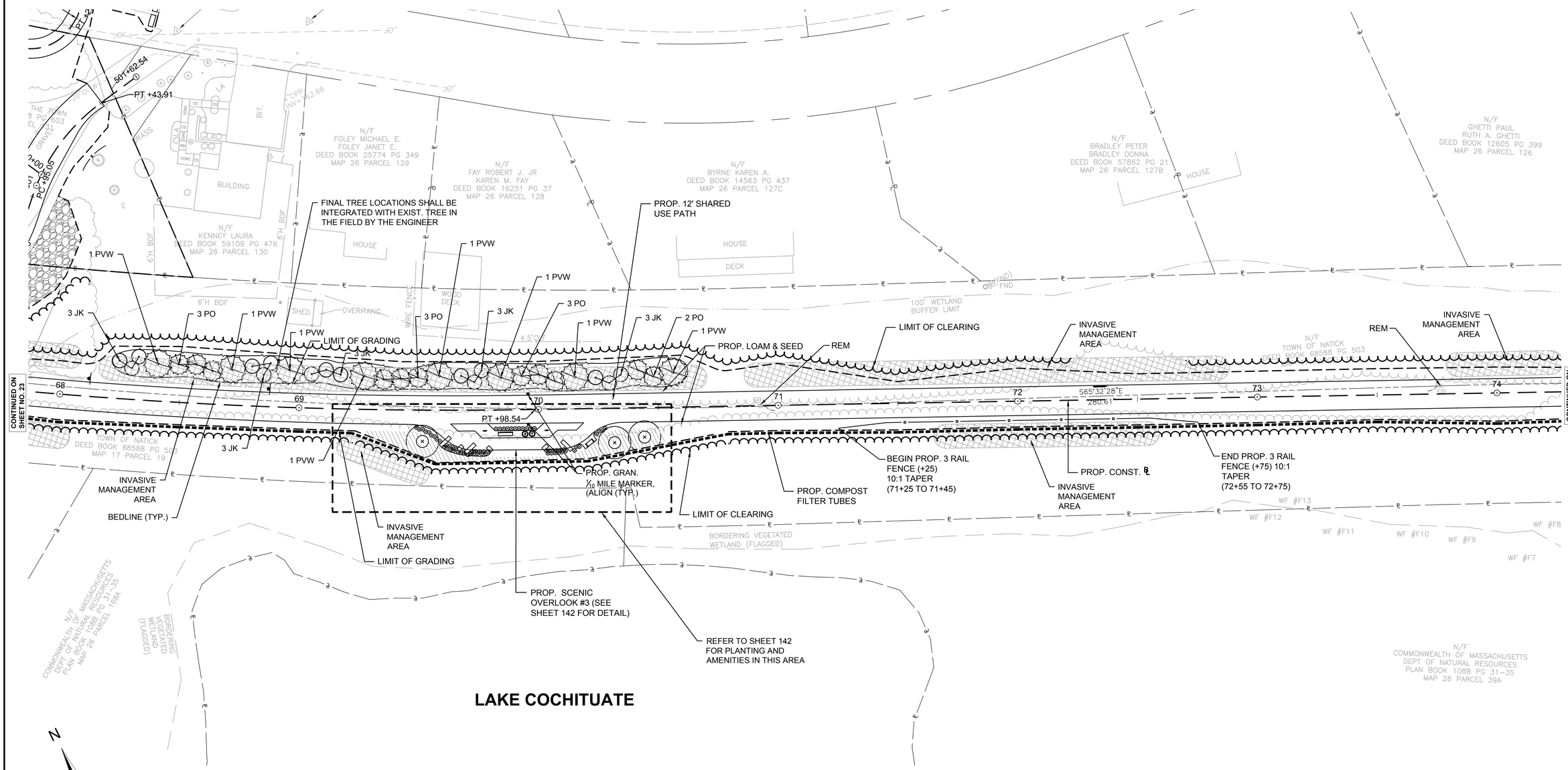

PLANT LIST - THIS SHEET					
SYM	QTY	BOTANICAL NAME	COMMON NAME	SIZE	REMARKS
TREES					
JK	15	Juniperus chinensis 'Keteleeri'	Keteleeri Juniper	8'-9' Ht.	B&B
PO	11	Picea omorika	Serbian Spruce	8'-10' Ht.	B&B
PVW	8	Pinus 'Vanderwolf'	Vanderwolf Pine	10'-12' Ht.	B&B

NOTE:
REFER TO SHEET 137 FOR TOTAL PLANT LIST.

FOR PROFILE:
SEE SHEET NOS. 49-50

4576 CONST PLANS 17-31.DWG Plotted on 20-Aug-2018 11:10 AM

HIGHWAY GUARD DETAILS	TRAFFIC SIGNAL CONDUIT	WATER SUPPLY ALTERATIONS	DRAINAGE DETAILS
NONE	NONE	NONE	NONE

NATICK/FRAMINGHAM
COCHITUATE RAIL TRAIL

STATE	FED. AID PROJ. NO.	SHEET NO.	TOTAL SHEETS
MA	STP(TE)/TAP/CMQ-003S(206)	27	253
PROJECT FILE NO.	607732		

CONSTRUCTION PLAN No. 21

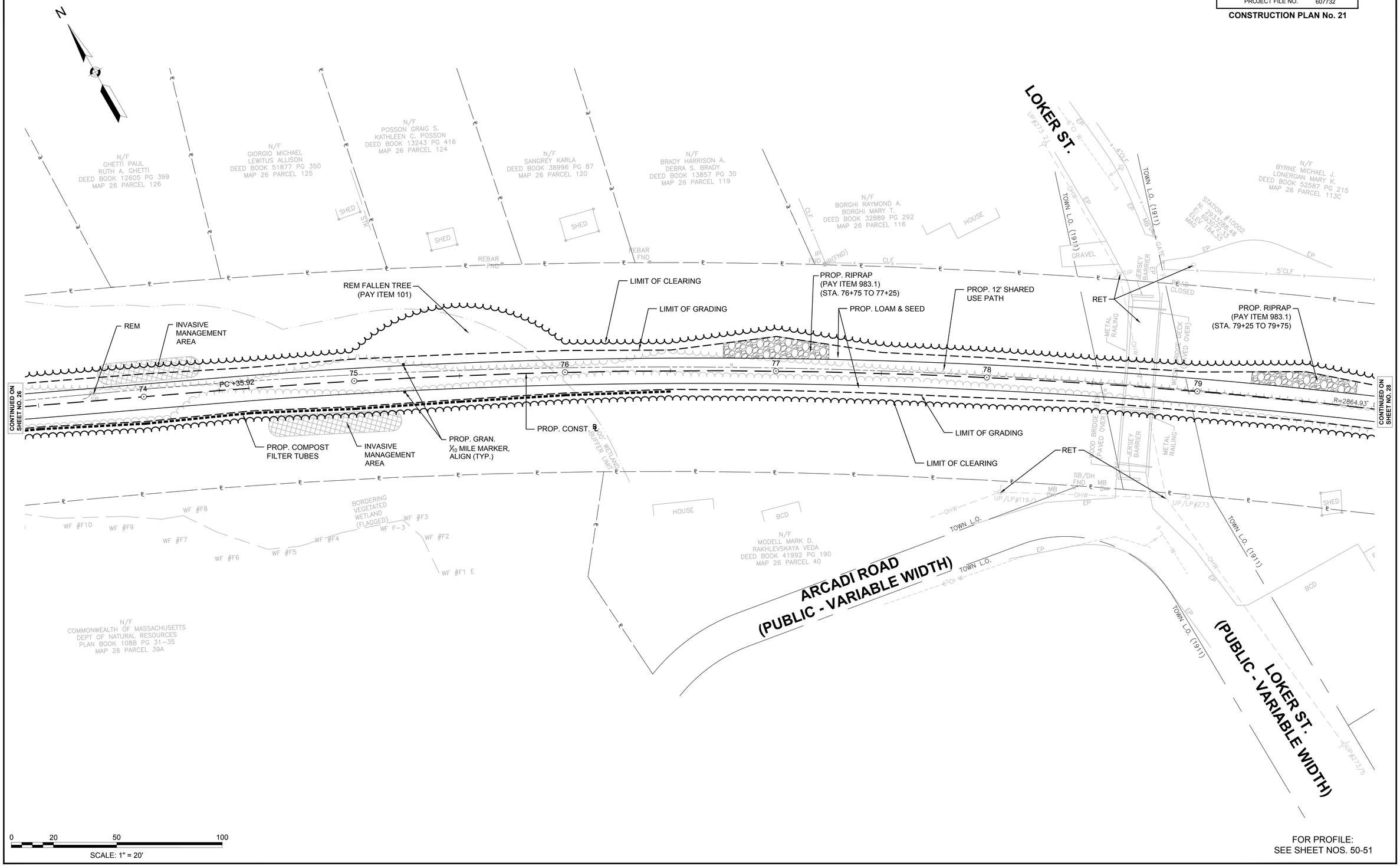

FOR PROFILE:
SEE SHEET NOS. 50-51

4576 CONST PLANS 17-31.DWG Plotted on 31-Aug-2018 10:12 AM

HIGHWAY GUARD DETAILS	TRAFFIC SIGNAL CONDUIT	WATER SUPPLY ALTERATIONS	DRAINAGE DETAILS
NONE	NONE	NONE	NONE

NATICK/FRAMINGHAM
COCHITUATE RAIL TRAIL

STATE	FED. AID PROJ. NO.	SHEET NO.	TOTAL SHEETS
MA	STP(TE)/TAP/CMQ-003S(206)	28	253
PROJECT FILE NO.	607732		

CONSTRUCTION PLAN No. 22

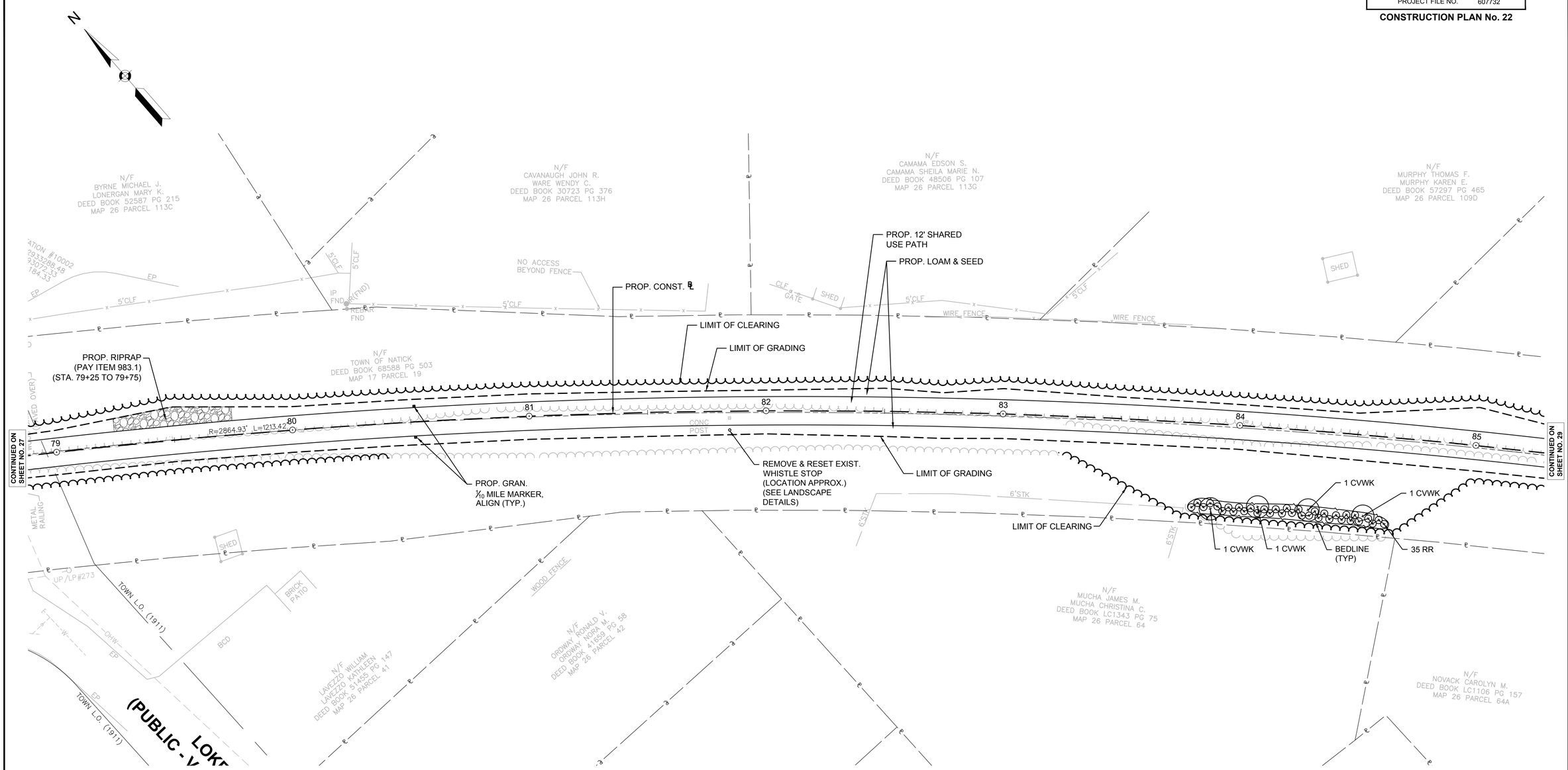

PLANT LIST - THIS SHEET					
SYM	QTY	BOTANICAL NAME	COMMON NAME	SIZE	REMARKS
TREES					
CVWK	4	Crataegus viridis 'Winter King'	Winter King Hawthorn	1"-1.5" Cal.	B&B
SHRUBS					
RR	35	Rosa 'Radsunny'	Sunny Knock Out Rose	2 GAL	CONT

NOTE:
REFER TO SHEET 137 FOR TOTAL PLANT LIST.

0 20 50 100
SCALE: 1" = 20'

FOR PROFILE:
SEE SHEET NOS. 51-52

4576 CONST PLANS 17-31.DWG Plotted on 20-Aug-2018 11:11 AM

HIGHWAY GUARD DETAILS	TRAFFIC SIGNAL CONDUIT	WATER SUPPLY ALTERATIONS	DRAINAGE DETAILS
NONE	NONE	NONE	NONE

NATICK/FRAMINGHAM
COCHITUATE RAIL TRAIL

STATE	FED. AID PROJ. NO.	SHEET NO.	TOTAL SHEETS
MA	STP(TE)/TAP/CMQ-003S(206)	29	253
PROJECT FILE NO.	607732		

CONSTRUCTION PLAN No. 23

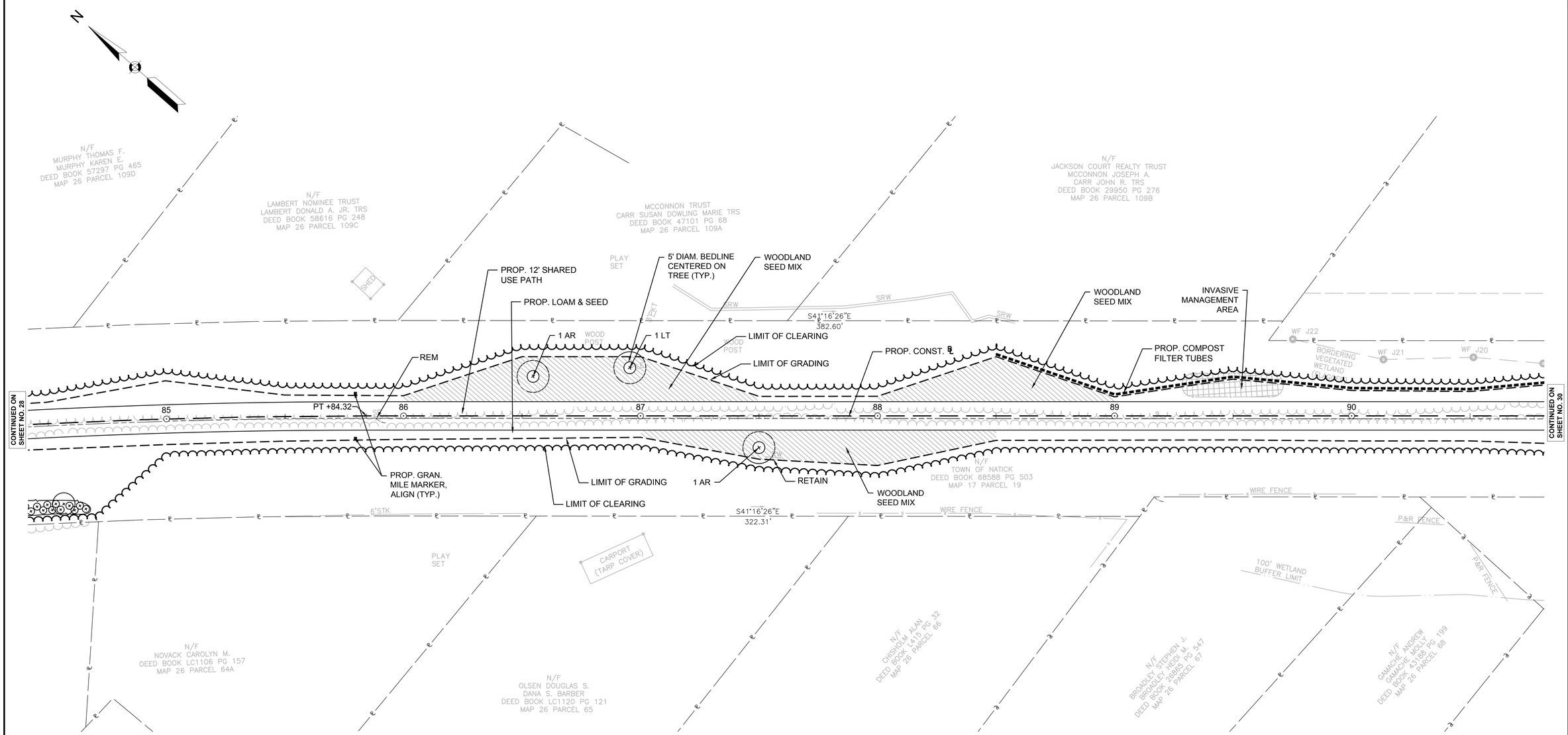

PLANT LIST - THIS SHEET

SYM	QTY	BOTANICAL NAME	COMMON NAME	SIZE	REMARKS
TREES					
AR	2	Acer rubrum 'October Glory'	Red Maple	2"-2.5" Cal.	B&B
LT	1	Liriodendron tulipifera	Tulip Tree	2.5"-3" Cal.	B&B

NOTE:
REFER TO SHEET 137 FOR TOTAL PLANT LIST.

FOR PROFILE:
SEE SHEET NOS. 52-53

4576 CONST PLANS 17-31.DWG Plotted on 20-Aug-2018 11:11 AM

HIGHWAY GUARD DETAILS	TRAFFIC SIGNAL CONDUIT	WATER SUPPLY ALTERATIONS	DRAINAGE DETAILS
NONE	NONE	NONE	NONE

NATICK/FRAMINGHAM
COCHITUATE RAIL TRAIL

STATE	FED. AID PROJ. NO.	SHEET NO.	TOTAL SHEETS
MA	STP(TE)/TAP/CMQ-003S(206)	30	253
PROJECT FILE NO.	607732		

CONSTRUCTION PLAN No. 24

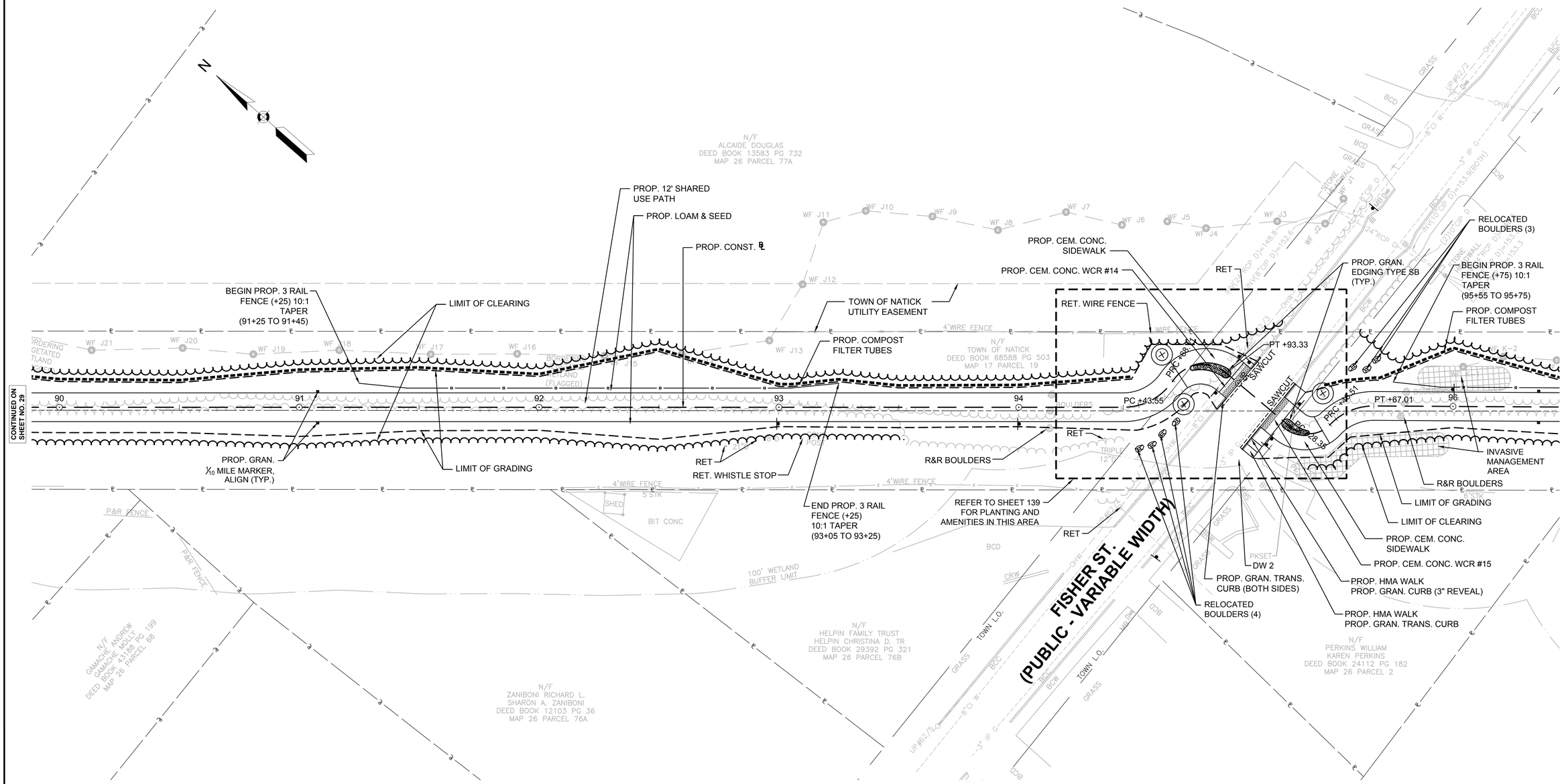

0 20 50 100
SCALE: 1" = 20'

FOR PROFILE:
SEE SHEET NOS. 53-54

4576 CONST PLANS 17-31.DWG Plotted on 20-Aug-2018 11:11 AM

HIGHWAY GUARD DETAILS

NONE

TRAFFIC SIGNAL CONDUIT

SEE BELOW

WATER SUPPLY ALTERATIONS

NONE

DRAINAGE DETAILS

SEE BELOW

NATICK/FRAMINGHAM
COCHITUATE RAIL TRAIL

STATE	FED. AID PROJ. NO.	SHEET NO.	TOTAL SHEETS
MA	STP(TE)/TAP/CMQ-003S(206)	31	253
PROJECT FILE NO.	607732		

CONSTRUCTION PLAN No. 25

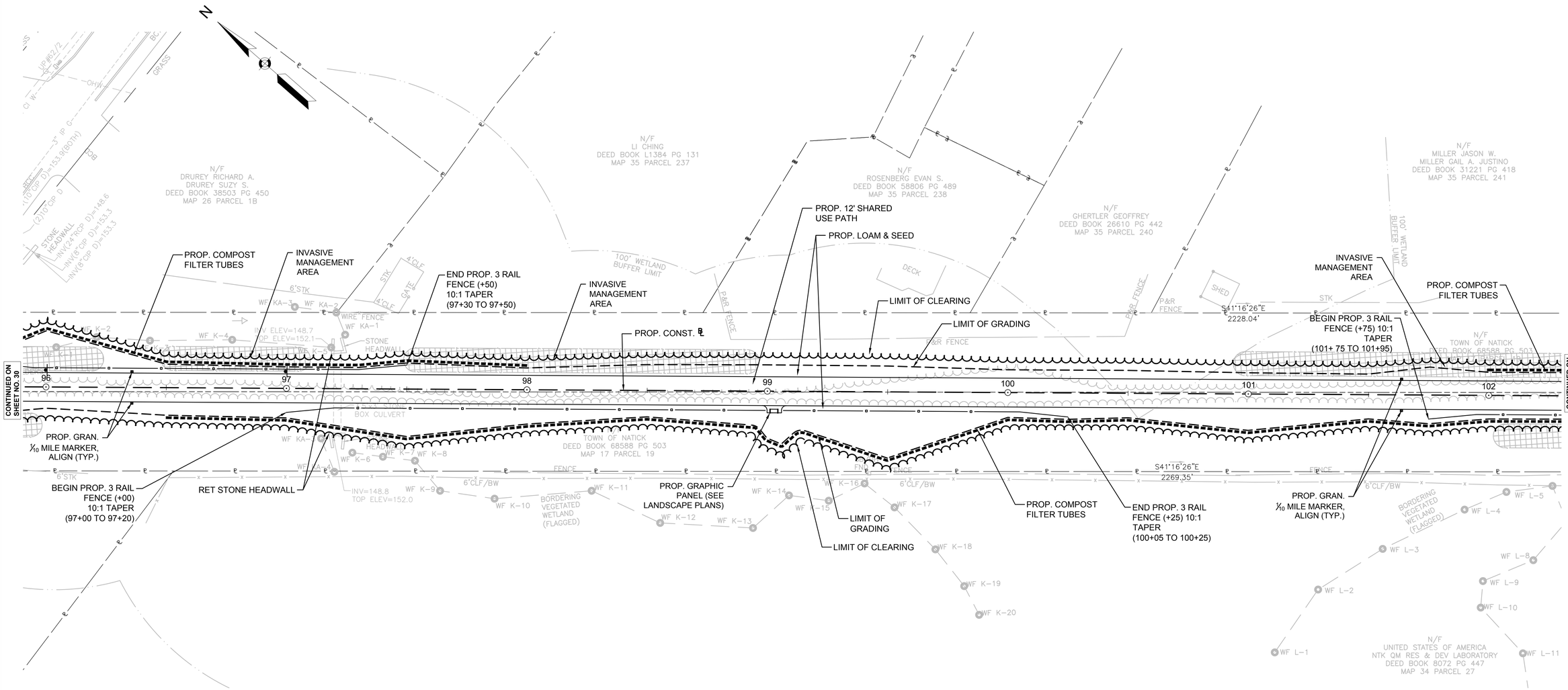

0 20 50 100

SCALE: 1" = 20'

FOR PROFILE:
SEE SHEET NOS. 54-55

4576 CONST PLANS 17-31.DWG Plotted on 20-Aug-2018 11:15 AM

HIGHWAY GUARD DETAILS	TRAFFIC SIGNAL CONDUIT	WATER SUPPLY ALTERATIONS	DRAINAGE DETAILS
NONE	NONE	NONE	NONE

NATICK/FRAMINGHAM
COCHITUATE RAIL TRAIL

STATE	FED. AID PROJ. NO.	SHEET NO.	TOTAL SHEETS
MA	STP(TE)/TAP/CMQ-003S(206)	32	253
PROJECT FILE NO.	607732		

CONSTRUCTION PLAN No. 26

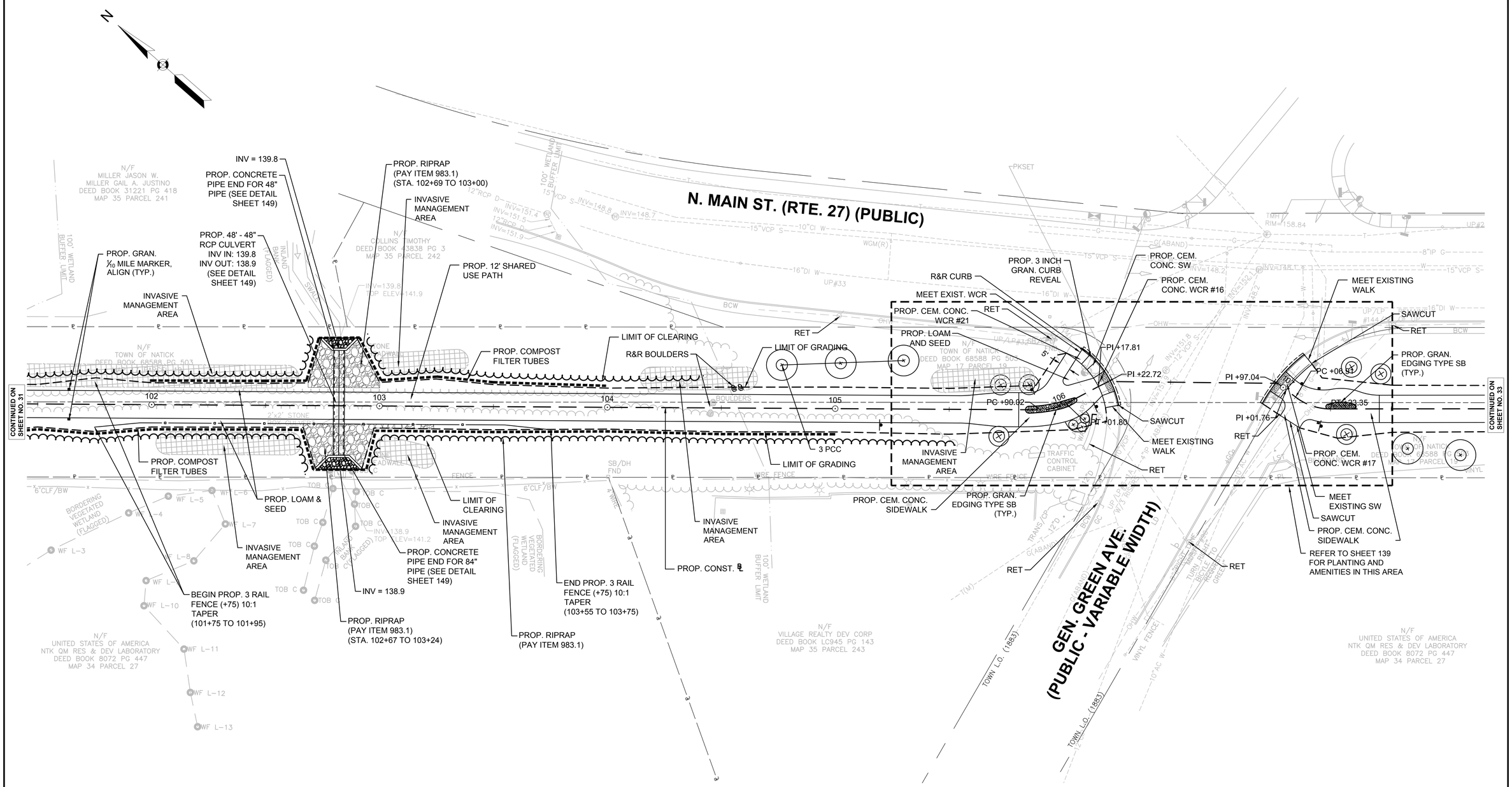

PLANT LIST - THIS SHEET					
SYM	QTY	BOTANICAL NAME	COMMON NAME	SIZE	REMARKS
TREES					
PCC	3	Pyrus calleryana 'Chanticleer'	Chanticleer Pear	2"-2.5" Cal.	B&B

NOTE:
REFER TO SHEET 137 FOR TOTAL PLANT LIST.

FOR PROFILE:
SEE SHEET NOS. 55-56

4576 CONST PLANS 17-31.DWG Plotted on 20-Aug-2018 11:16 AM

HIGHWAY GUARD DETAILS	TRAFFIC SIGNAL CONDUIT	WATER SUPPLY ALTERATIONS	DRAINAGE DETAILS
NONE	NONE	NONE	NONE

NATICK/FRAMINGHAM
COCHITUATE RAIL TRAIL

STATE	FED. AID PROJ. NO.	SHEET NO.	TOTAL SHEETS
MA	STP(TE)/TAP/CMQ-003S(206)	33	253
PROJECT FILE NO.	607732		

CONSTRUCTION PLAN No. 27

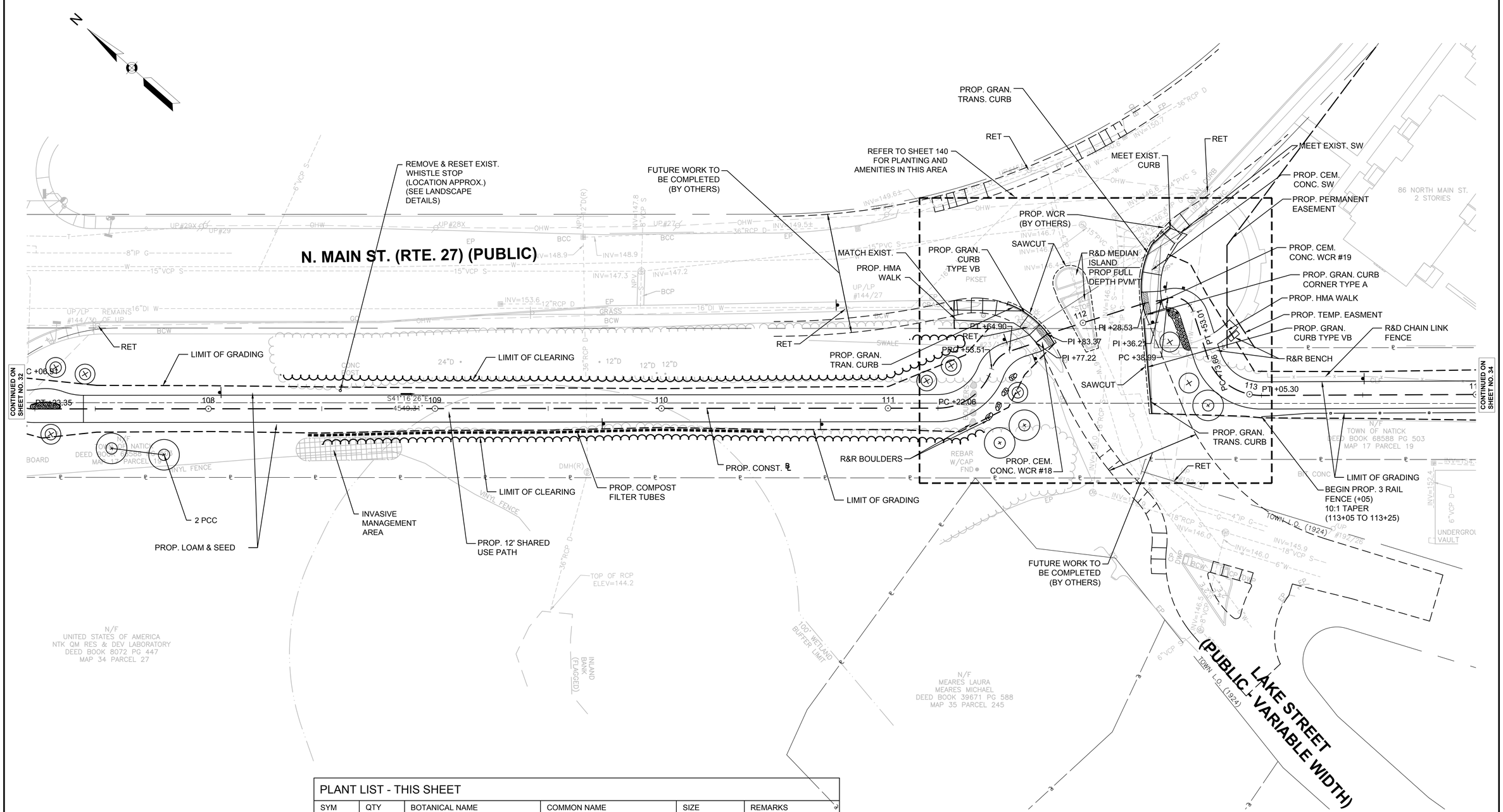

PLANT LIST - THIS SHEET					
SYM	QTY	BOTANICAL NAME	COMMON NAME	SIZE	REMARKS
TREES					
PCC	2	Pyrus calleryana 'Chanticleer'	Chanticleer Pear	2"-2.5" Cal.	B&B

NOTE:
REFER TO SHEET 137 FOR TOTAL PLANT LIST.

FOR PROFILE:
SEE SHEET NOS. 57-58

4576 CONST PLANS 17-31.DWG Plotted on 20-Aug-2018 11:16 AM

HIGHWAY GUARD DETAILS	TRAFFIC SIGNAL CONDUIT	WATER SUPPLY ALTERATIONS	DRAINAGE DETAILS
NONE	NONE	NONE	NONE

NATICK/FRAMINGHAM
COCHITUATE RAIL TRAIL

STATE	FED. AID PROJ. NO.	SHEET NO.	TOTAL SHEETS
MA	STP(TE)/TAP/CMQ-003S(206)	34	253
PROJECT FILE NO.	607732		

CONSTRUCTION PLAN No. 28

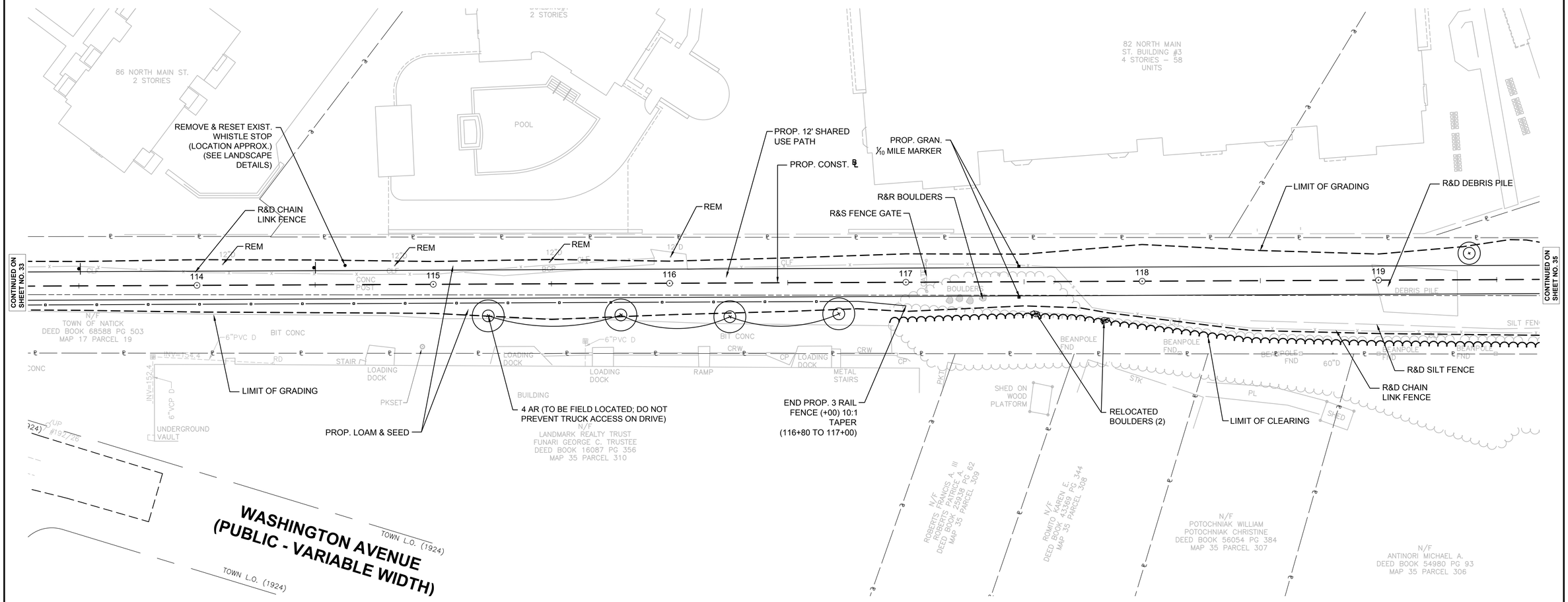

PLANT LIST - THIS SHEET					
SYM	QTY	BOTANICAL NAME	COMMON NAME	SIZE	REMARKS
TREES					
AR	4	Acer rubrum 'October Glory'	Red Maple	2"-2.5" Cal.	B&B

NOTE:
REFER TO SHEET 137 FOR TOTAL PLANT LIST.

FOR PROFILE:
SEE SHEET NOS. 58-59

4576 CONST PLANS 17-31.DWG Plotted on 20-Aug-2018 11:16 AM

HIGHWAY GUARD DETAILS	TRAFFIC SIGNAL CONDUIT	WATER SUPPLY ALTERATIONS	DRAINAGE DETAILS
NONE	NONE	NONE	NONE

NATICK/FRAMINGHAM
COCHITUATE RAIL TRAIL

STATE	FED. AID PROJ. NO.	SHEET NO.	TOTAL SHEETS
MA	STP(TE)/TAP/CMQ-003S(206)	35	253
PROJECT FILE NO.	607732		

CONSTRUCTION PLAN No. 29

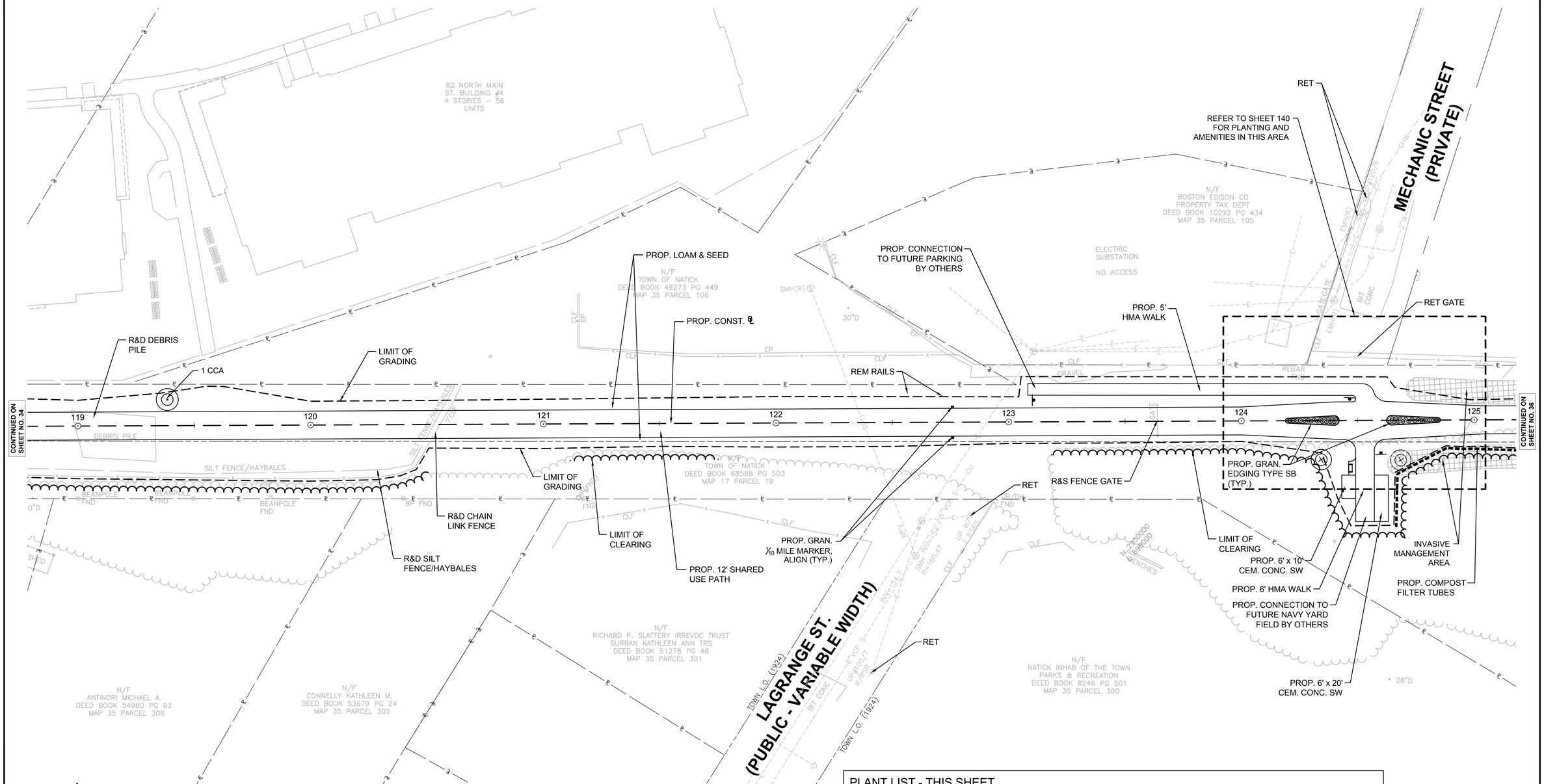

PLANT LIST - THIS SHEET					
SYM	QTY	BOTANICAL NAME	COMMON NAME	SIZE	REMARKS
TREES					
CCA	1	Cercis canadensis	Eastern Redbud	1.5"-2" Cal.	B&B

NOTE:
REFER TO SHEET 137 FOR TOTAL PLANT LIST.

FOR PROFILE:
SEE SHEET NOS. 59-60

4576 CONST PLANS 17-31.DWG Plotted on 20-Aug-2018 11:16 AM

HIGHWAY GUARD DETAILS	TRAFFIC SIGNAL CONDUIT	WATER SUPPLY ALTERATIONS	DRAINAGE DETAILS
NONE	NONE	NONE	NONE

NATICK/FRAMINGHAM
COCHITUATE RAIL TRAIL

STATE	FED. AID PROJ. NO.	SHEET NO.	TOTAL SHEETS
MA	STP(TE)/TAP/CMQ-003S(206)	36	253
PROJECT FILE NO.	607732		

CONSTRUCTION PLAN No. 30

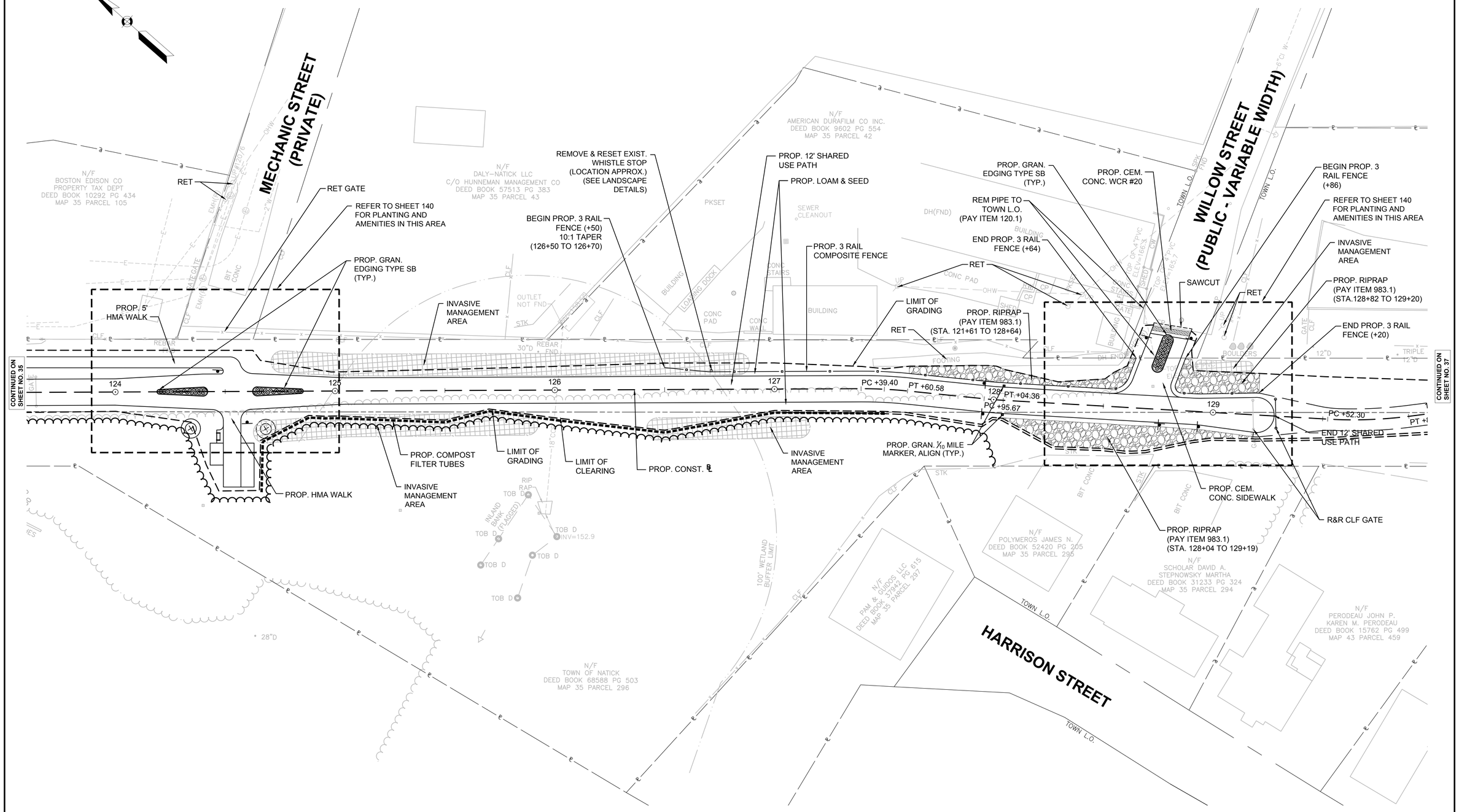

FOR PROFILE:
SEE SHEET NO. 60

4576 CONST PLANS 17-31.DWG Plotted on 20-Aug-2018 11:16 AM

HIGHWAY GUARD DETAILS	TRAFFIC SIGNAL CONDUIT	WATER SUPPLY ALTERATIONS	DRAINAGE DETAILS
NONE	NONE	NONE	NONE

NATICK/FRAMINGHAM
COCHITUATE RAIL TRAIL

STATE	FED. AID PROJ. NO.	SHEET NO.	TOTAL SHEETS
MA	STP(TE)/TAP/CMQ-003S(206)	37	253
PROJECT FILE NO.	607732		

CONSTRUCTION PLAN No. 31

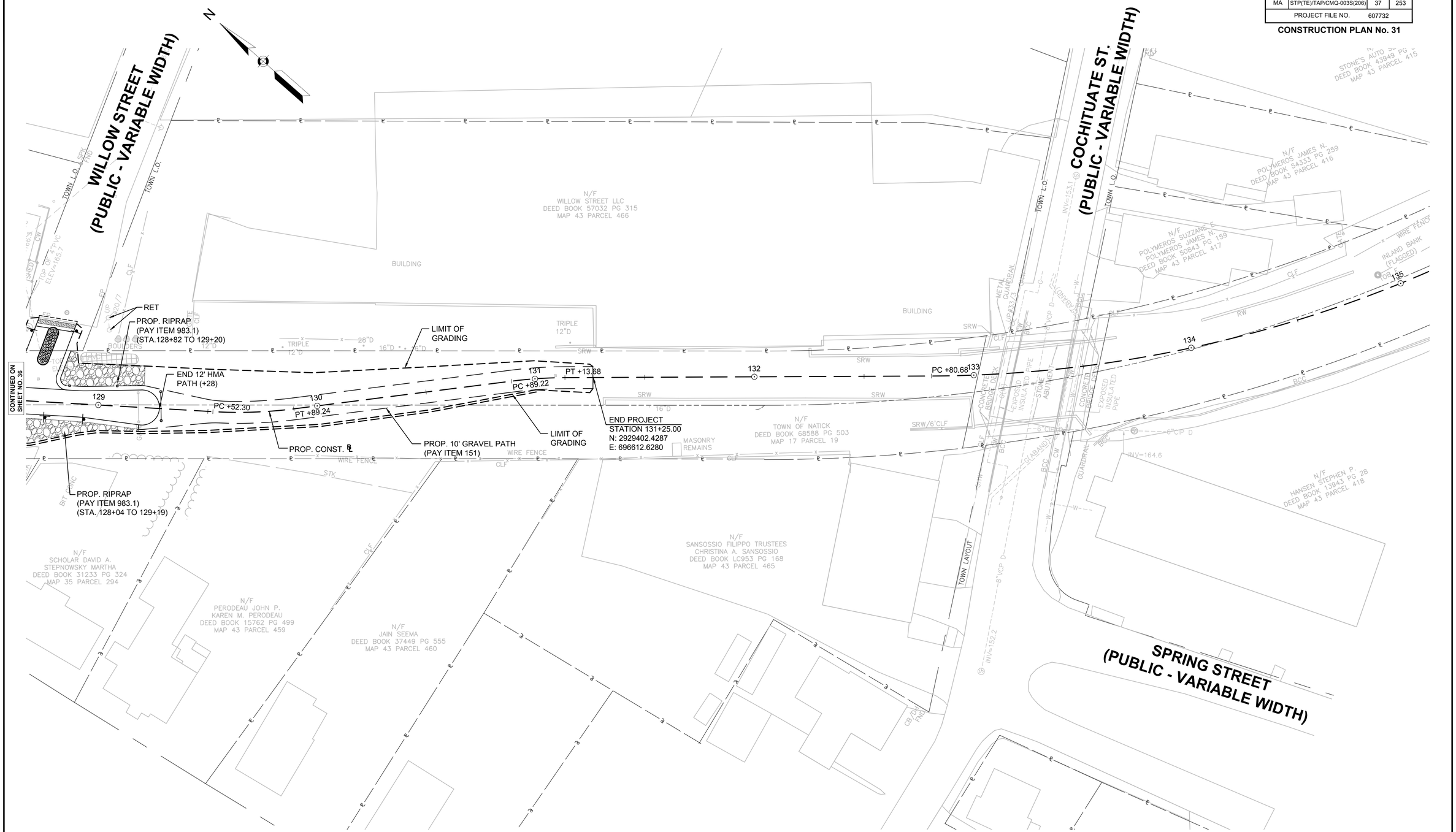

0 20 50 100
SCALE: 1" = 20'

FOR PROFILE:
SEE SHEET NOS. 60-61

4576 CONST PLANS 17-31.DWG Plotted on 20-Aug-2018 11:16 AM

NATICK/FRAMINGHAM
COCHITUATE RAIL TRAIL

STATE	FED. AID PROJ. NO.	SHEET NO.	TOTAL SHEETS
MA	STP(TE)/TAP/CMQ-003S(206)	38	253
PROJECT FILE NO.	607732		

PROFILE

4578 PROFILES.DWG Plotted on 20-Aug-2018 11:17 AM

CRT MAIN BL

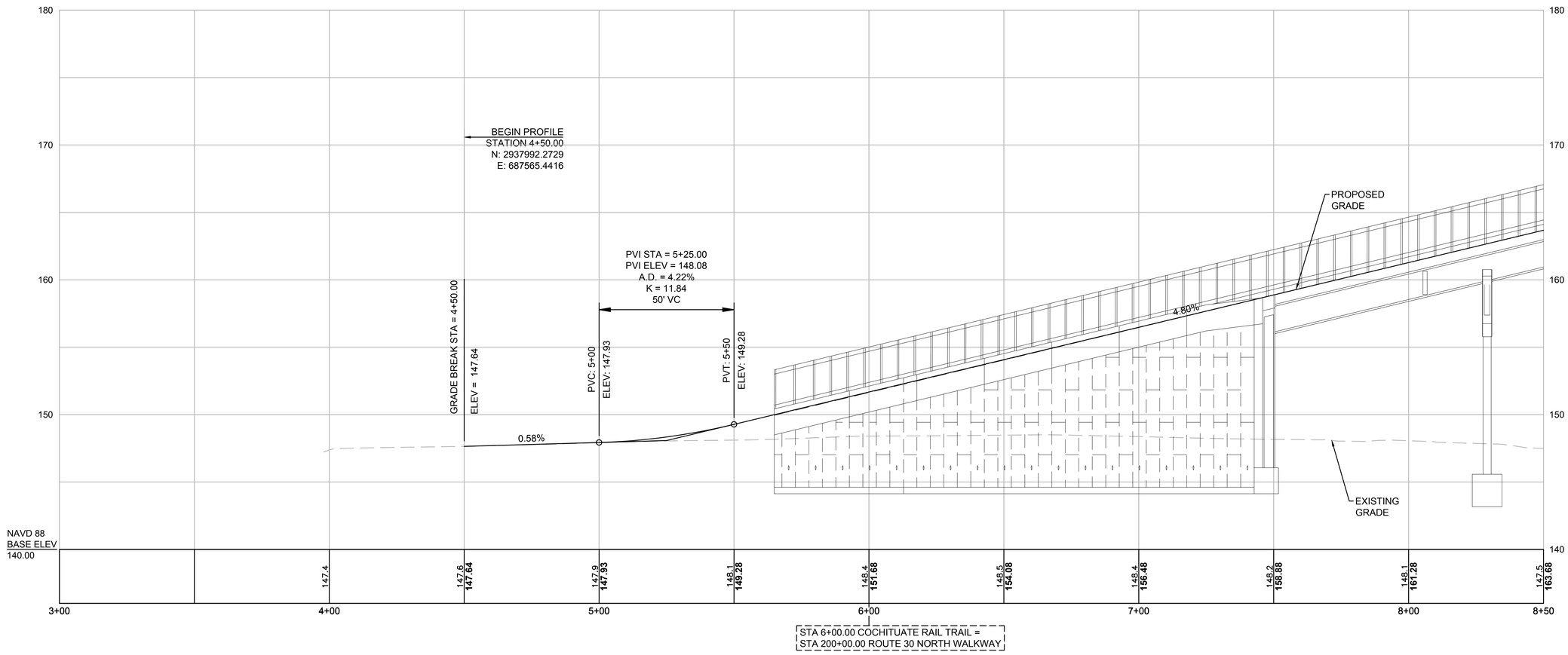

CONTINUED ON SHEET NO. 39

NOTE:
RUNNING SLOPES SHALL NOT EXCEED ONE-IN-20 (1:20) (5.0%).

HOR. SCALE IN FEET
20 0 20 40
4 0 4 8
VER. SCALE IN FEET

FOR CONSTRUCTION PLANS:
SEE SHEET NO. 7

NATICK/FRAMINGHAM
COCHITUATE RAIL TRAIL

STATE	FED. AID PROJ. NO.	SHEET NO.	TOTAL SHEETS
MA	STP(TE)/TAP/CMQ-003S(206)	39	253
PROJECT FILE NO.	607732		

PROFILE

4578 PROFILES.DWG Plotted on 20-Aug-2018 11:17 AM

CRT MAIN BL

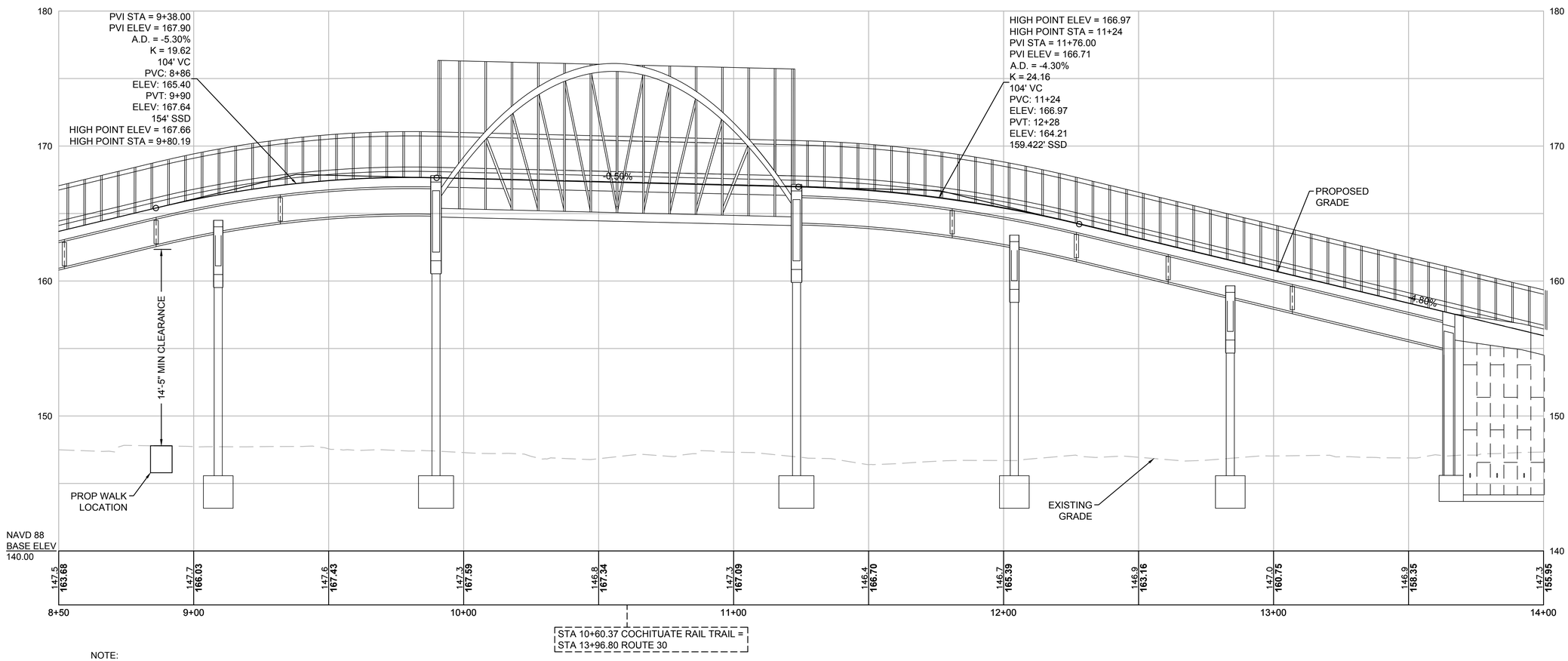

NOTE:
RUNNING SLOPES SHALL NOT EXCEED ONE-IN-20 (1:20) (5.0%).

CONTINUED ON SHEET NO. 38

CONTINUED ON SHEET NO. 40

HOR. SCALE IN FEET
20 0 20 40
4 0 4 8
VER. SCALE IN FEET

FOR CONSTRUCTION PLANS:
SEE SHEET NO. 8

NATICK/FRAMINGHAM
COCHITUATE RAIL TRAIL

STATE	FED. AID PROJ. NO.	SHEET NO.	TOTAL SHEETS
MA	STP(TE)/TAP/CMQ-003S(206)	40	253
PROJECT FILE NO.	607732		

PROFILE

4578 PROFILES.DWG Plotted on 20-Aug-2018 11:17 AM

CRT MAIN BL

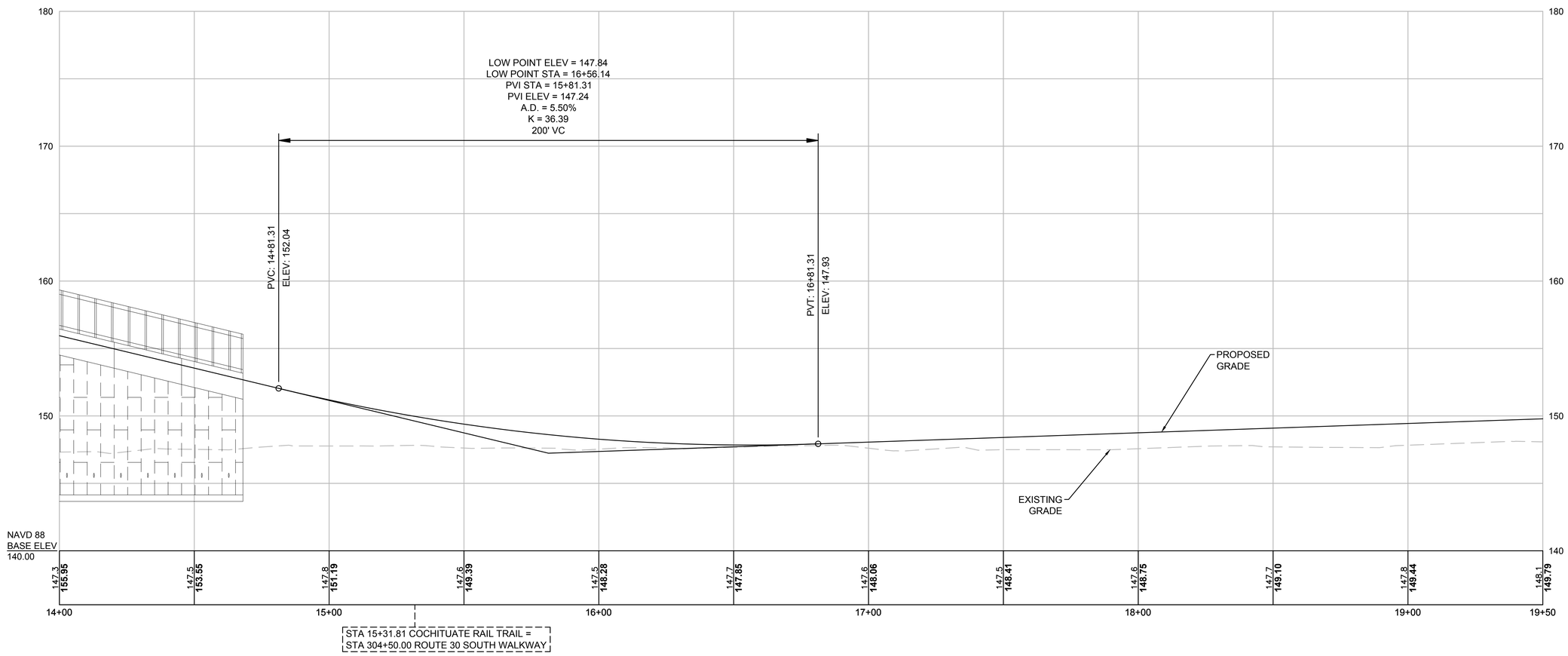

CONTINUED ON SHEET NO. 39

CONTINUED ON SHEET NO. 41

NOTE:
RUNNING SLOPES SHALL NOT EXCEED ONE-IN-20 (1:20) (5.0%).

HOR. SCALE IN FEET
20 0 20 40
4 0 4 8
VER. SCALE IN FEET

FOR CONSTRUCTION PLANS:
SEE SHEET NO. 11

NATICK/FRAMINGHAM
COCHITUATE RAIL TRAIL

STATE	FED. AID PROJ. NO.	SHEET NO.	TOTAL SHEETS
MA	STP(TE)/TAP/CMQ-003S(206)	41	253
PROJECT FILE NO.	607732		

PROFILE

4578 PROFILES.DWG Plotted on 20-Aug-2018 11:18 AM

CRT MAIN BL

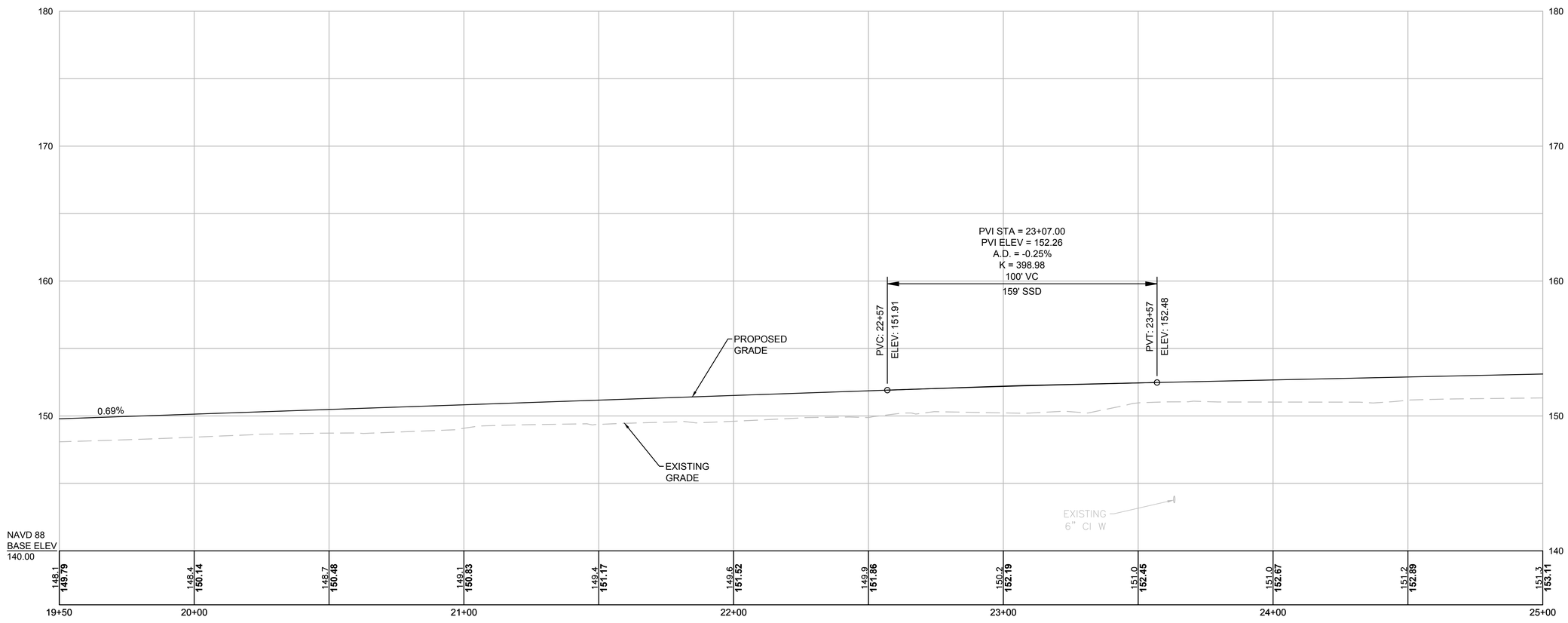

CONTINUED ON SHEET NO. 40

CONTINUED ON SHEET NO. 42

HOR. SCALE IN FEET
20 0 20 40
4 0 4 8
VER. SCALE IN FEET

FOR CONSTRUCTION PLANS:
SEE SHEET NO. 12

NATICK/FRAMINGHAM
COCHITUATE RAIL TRAIL

STATE	FED. AID PROJ. NO.	SHEET NO.	TOTAL SHEETS
MA	STP(TE)/TAP/CMQ-003S(206)	42	253
PROJECT FILE NO.	607732		

PROFILE

4578 PROFILES.DWG Plotted on 20-Aug-2018 11:18 AM

CRT MAIN BL

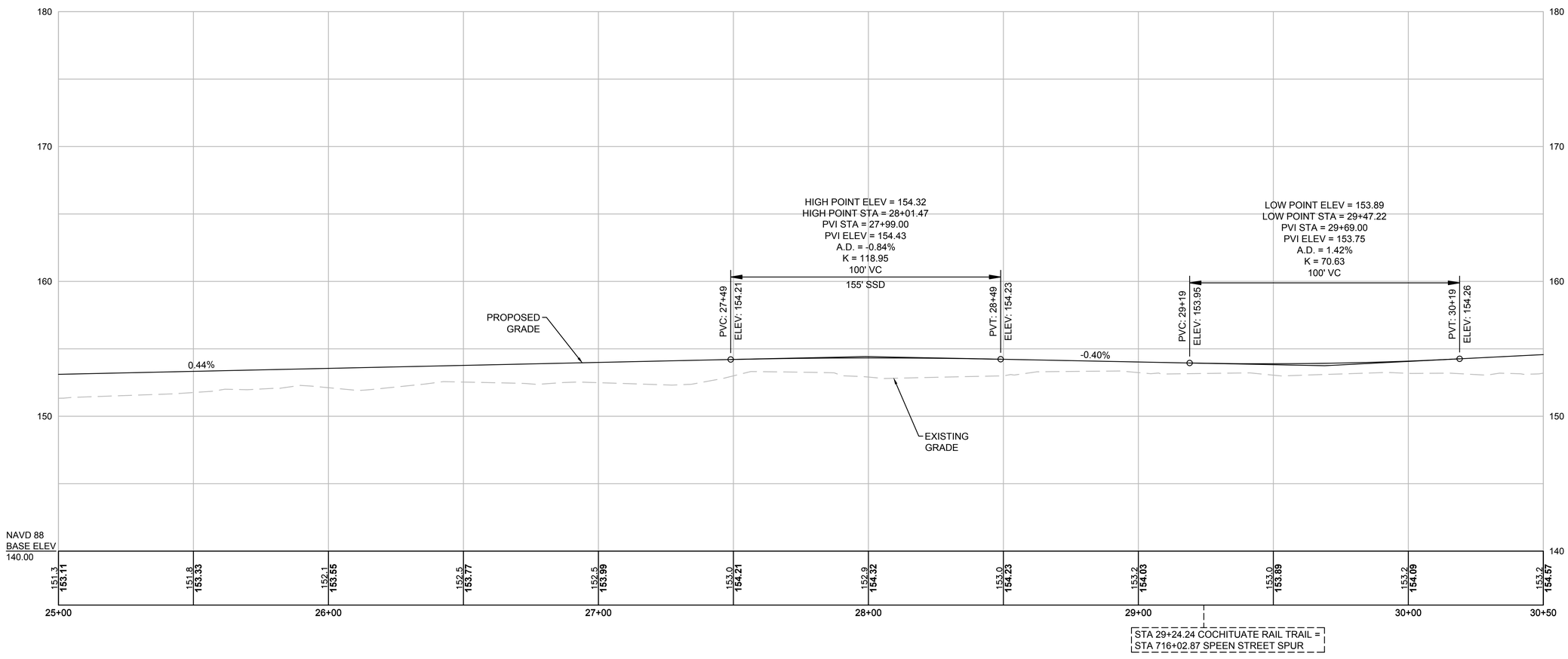

CONTINUED ON SHEET NO. ##

CONTINUED ON SHEET NO. ##

HOR. SCALE IN FEET
20 0 20 40
4 0 4 8
VER. SCALE IN FEET

FOR CONSTRUCTION PLANS:
SEE SHEET NO. 13

NATICK/FRAMINGHAM
COCHITUATE RAIL TRAIL

STATE	FED. AID PROJ. NO.	SHEET NO.	TOTAL SHEETS
MA	STP(TE)/TAP/CMQ-003S(206)	43	253
PROJECT FILE NO.	607732		

PROFILE

4578 PROFILES.DWG Plotted on 20-Aug-2018 11:18 AM

CRT MAIN BL

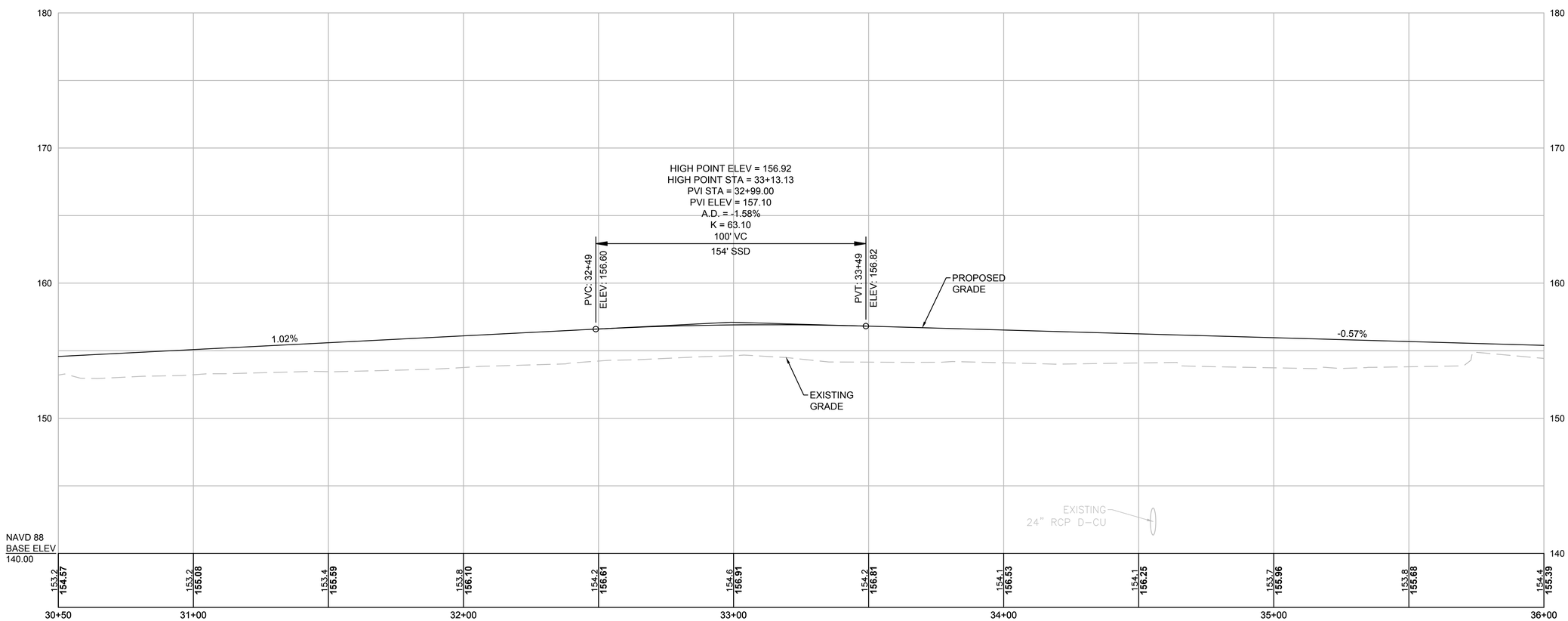

CONTINUED ON SHEET NO. 42

CONTINUED ON SHEET NO. 44

HOR. SCALE IN FEET
20 0 20 40
4 0 4 8
VER. SCALE IN FEET

FOR CONSTRUCTION PLANS:
SEE SHEET NO. 17

NATICK/FRAMINGHAM
COCHITUATE RAIL TRAIL

STATE	FED. AID PROJ. NO.	SHEET NO.	TOTAL SHEETS
MA	STP(TE)/TAP/CMQ-003S(206)	44	253
PROJECT FILE NO.	607732		

PROFILE

Plotted on 20-Aug-2018 11:18 AM

4578 PROFILES.DWG

CRT MAIN BL

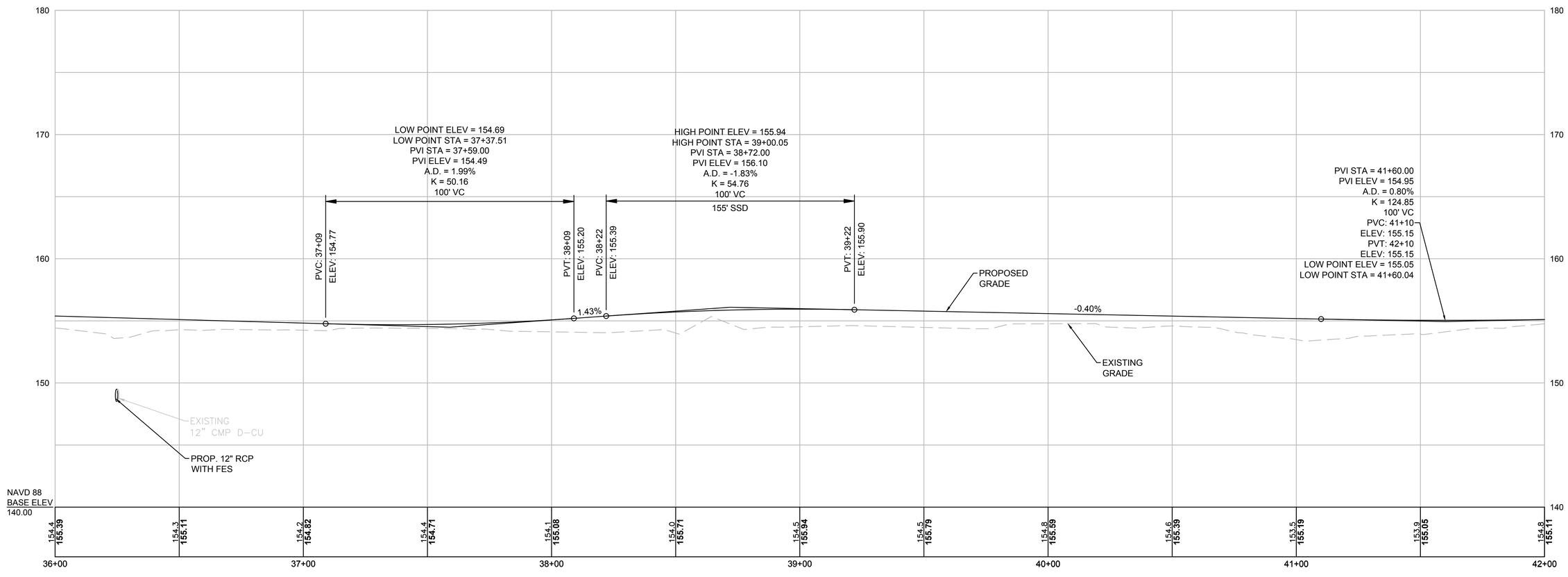

CONTINUED ON SHEET NO. 43

CONTINUED ON SHEET NO. 45

HOR. SCALE IN FEET
20 0 20 40
4 0 4 8
VER. SCALE IN FEET

FOR CONSTRUCTION PLANS:
SEE SHEET NOS. 18

NATICK/FRAMINGHAM
COCHITUATE RAIL TRAIL

STATE	FED. AID PROJ. NO.	SHEET NO.	TOTAL SHEETS
MA	STP(TE)/TAP/CMQ-003S(206)	45	253
PROJECT FILE NO.	607732		

PROFILE

4578 PROFILES.DWG Plotted on 20-Aug-2018 11:19 AM

CRT MAIN BL

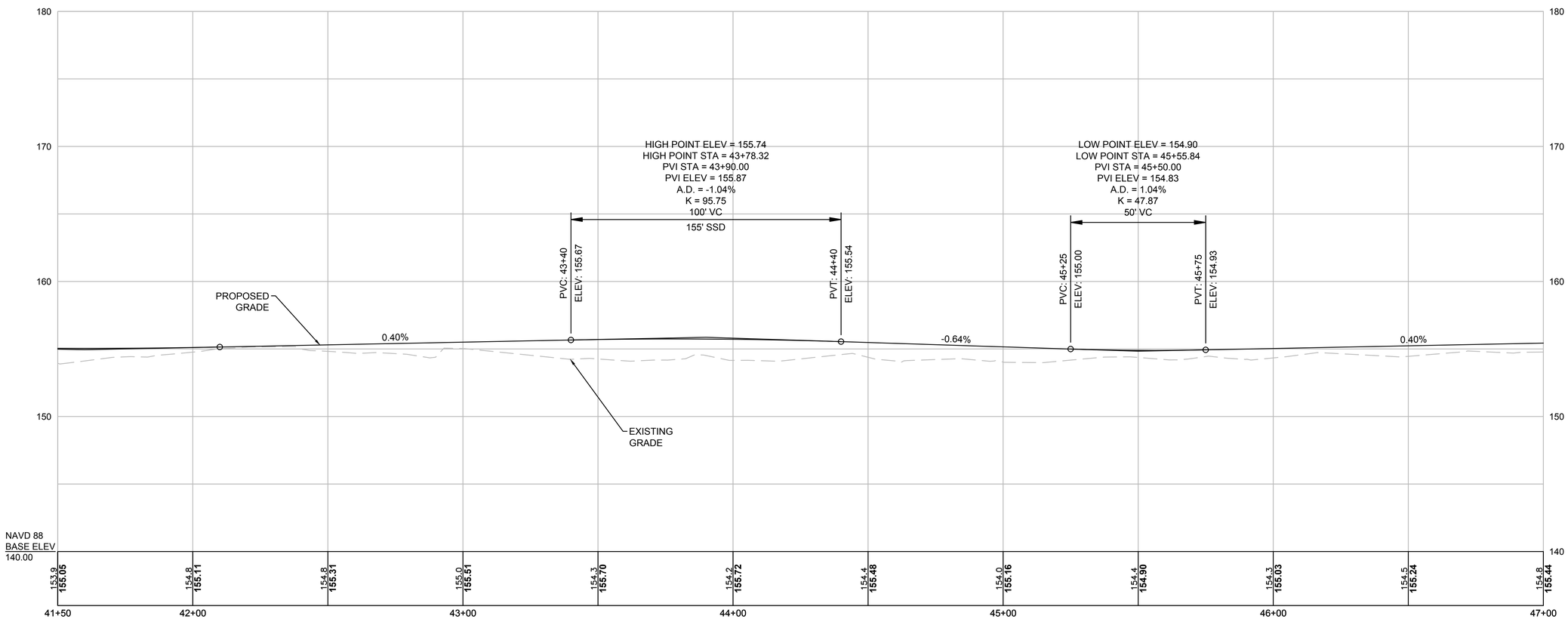

CONTINUED ON SHEET NO. 44

CONTINUED ON SHEET NO. 46

HOR. SCALE IN FEET
20 0 20 40
4 0 4 8
VER. SCALE IN FEET

FOR CONSTRUCTION PLANS:
SEE SHEET NO. 19

NATICK/FRAMINGHAM
COCHITUATE RAIL TRAIL

STATE	FED. AID PROJ. NO.	SHEET NO.	TOTAL SHEETS
MA	STP(TE)/TAP/CMQ-003S(206)	46	253
PROJECT FILE NO.	607732		

PROFILE

4578 PROFILES.DWG Plotted on 20-Aug-2018 11:19 AM

CRT MAIN BL

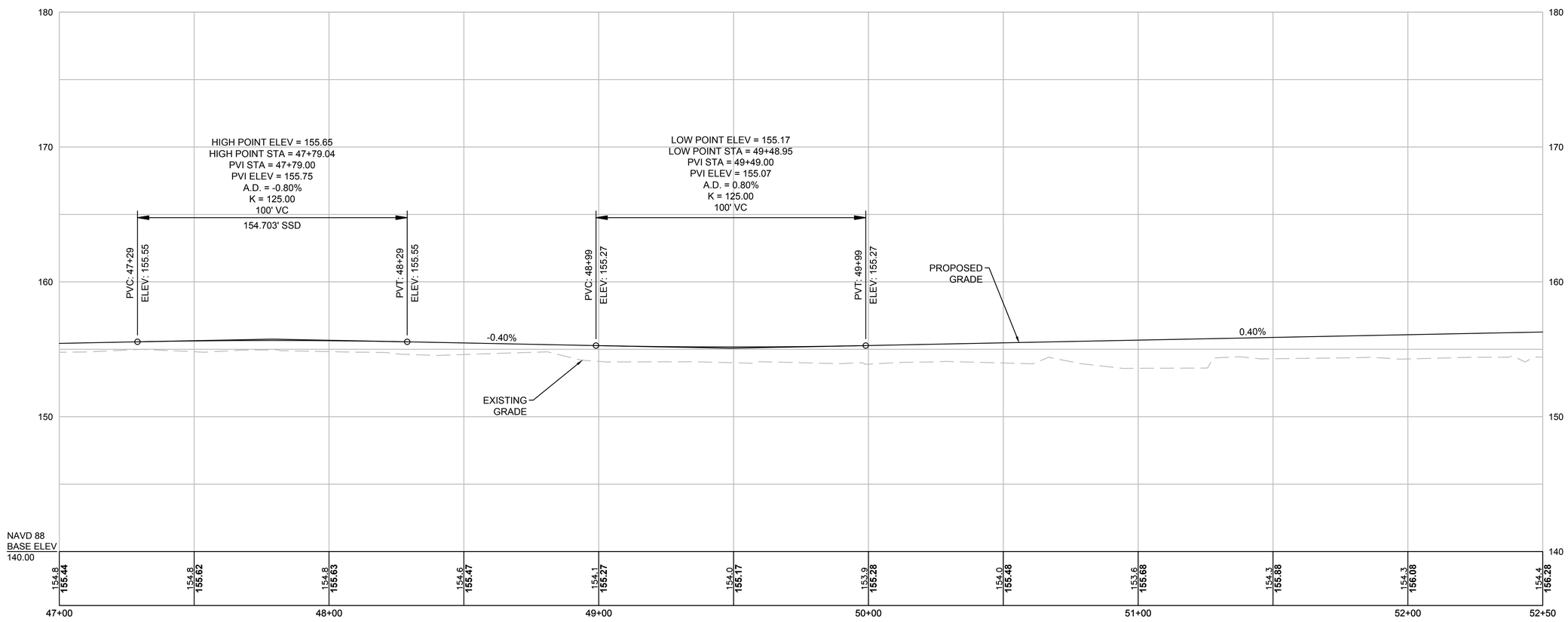

CONTINUED ON SHEET NO. 45

CONTINUED ON SHEET NO. 47

HOR. SCALE IN FEET
20 0 20 40
4 0 4 8
VER. SCALE IN FEET

FOR CONSTRUCTION PLANS:
SEE SHEET NO. 20

NATICK/FRAMINGHAM
COCHITUATE RAIL TRAIL

STATE	FED. AID PROJ. NO.	SHEET NO.	TOTAL SHEETS
MA	STP(TE)/TAP/CMQ-003S(206)	47	253
PROJECT FILE NO.	607732		

PROFILE

Plotted on 20-Aug-2018 11:19 AM

4578 PROFILES.DWG

CRT MAIN BL

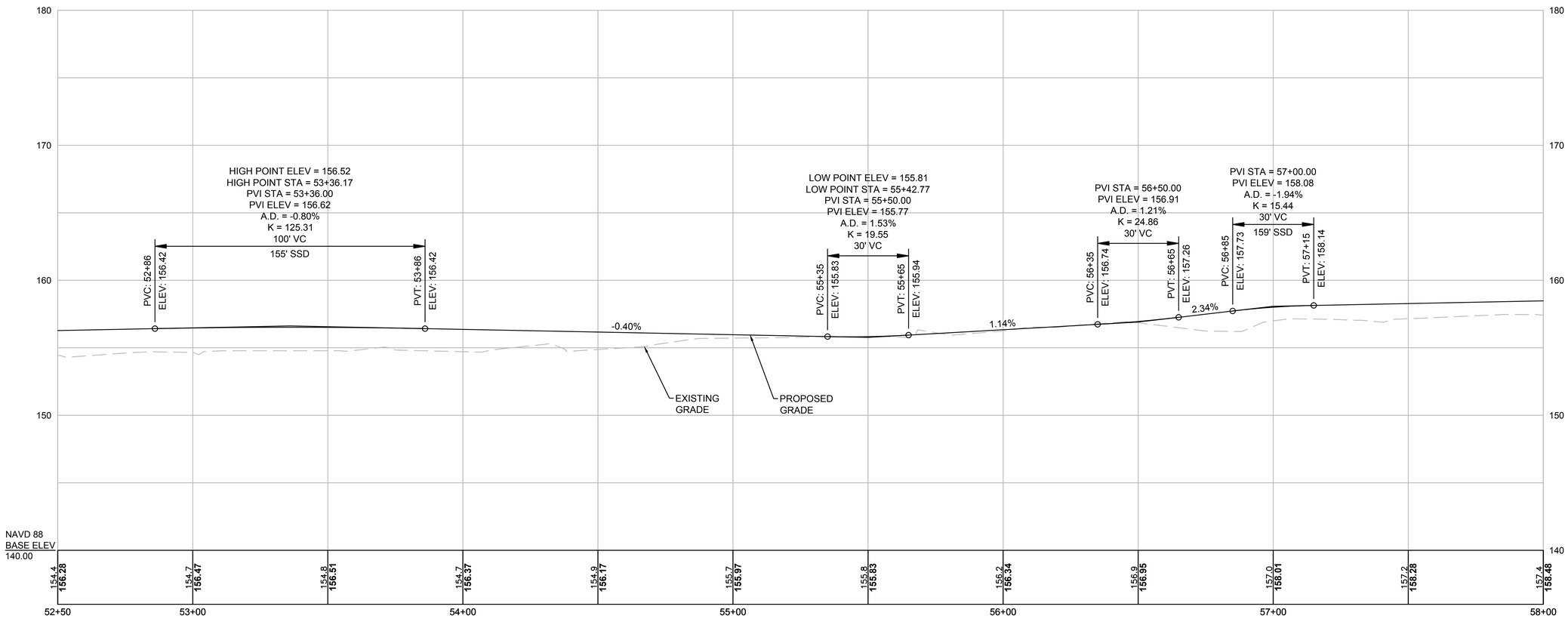

CONTINUED ON SHEET NO. 46

CONTINUED ON SHEET NO. 48

HOR. SCALE IN FEET
20 0 20 40
4 0 4 8
VER. SCALE IN FEET

FOR CONSTRUCTION PLANS:
SEE SHEET NO. 21

NATICK/FRAMINGHAM
COCHITUATE RAIL TRAIL

STATE	FED. AID PROJ. NO.	SHEET NO.	TOTAL SHEETS
MA	STP(TE)/TAP/CMQ-003S(206)	48	253
PROJECT FILE NO.	607732		

PROFILE

Plotted on 20-Aug-2018 11:19 AM

4578 PROFILES.DWG

CONTINUED ON SHEET NO. 47

CONTINUED ON SHEET NO. 49

CRT MAIN BL

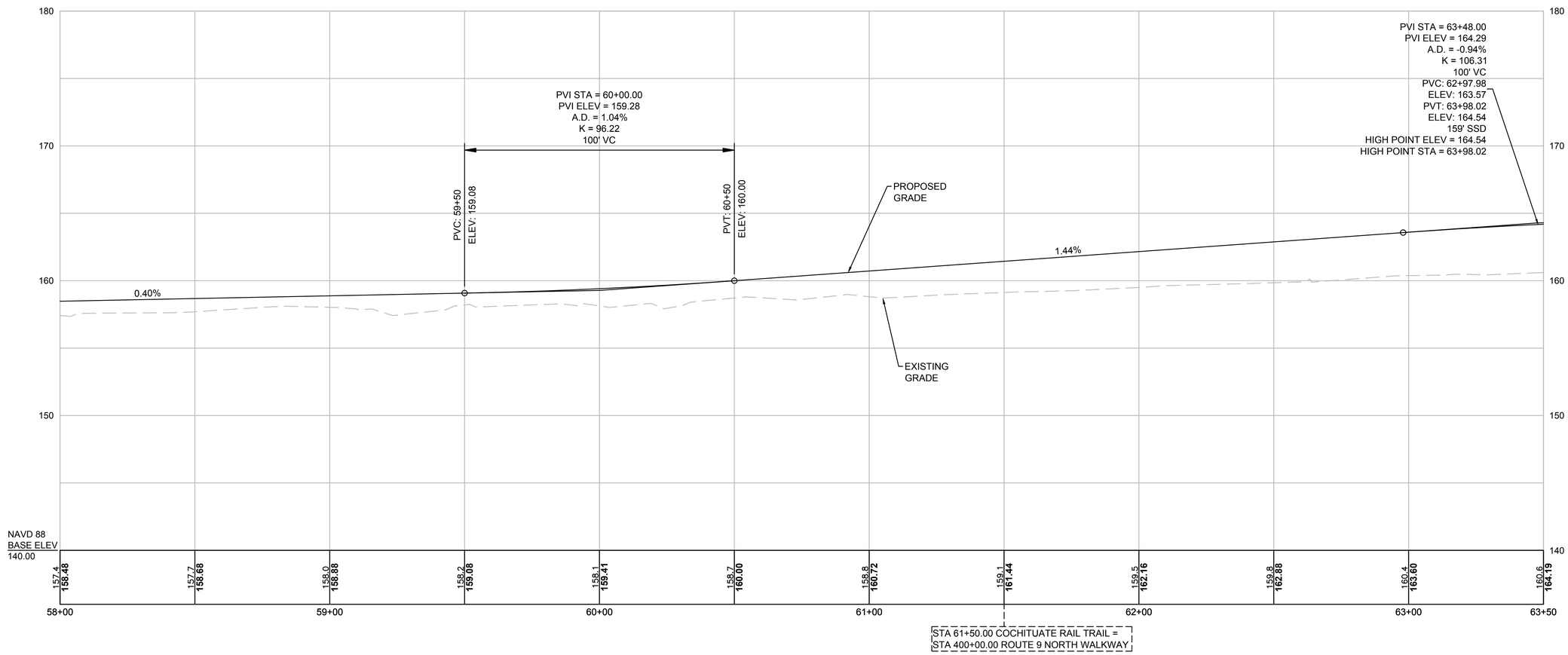

HOR. SCALE IN FEET
20 0 20 40
4 0 4 8
VER. SCALE IN FEET

FOR CONSTRUCTION PLANS:
SEE SHEET NOS. 22

NATICK/FRAMINGHAM
COCHITUATE RAIL TRAIL

STATE	FED. AID PROJ. NO.	SHEET NO.	TOTAL SHEETS
MA	STP(TE)/TAP/CMQ-003S(206)	49	253
PROJECT FILE NO.	607732		

PROFILE

4578 PROFILES.DWG Plotted on 20-Aug-2018 11:20 AM

CRT MAIN BL

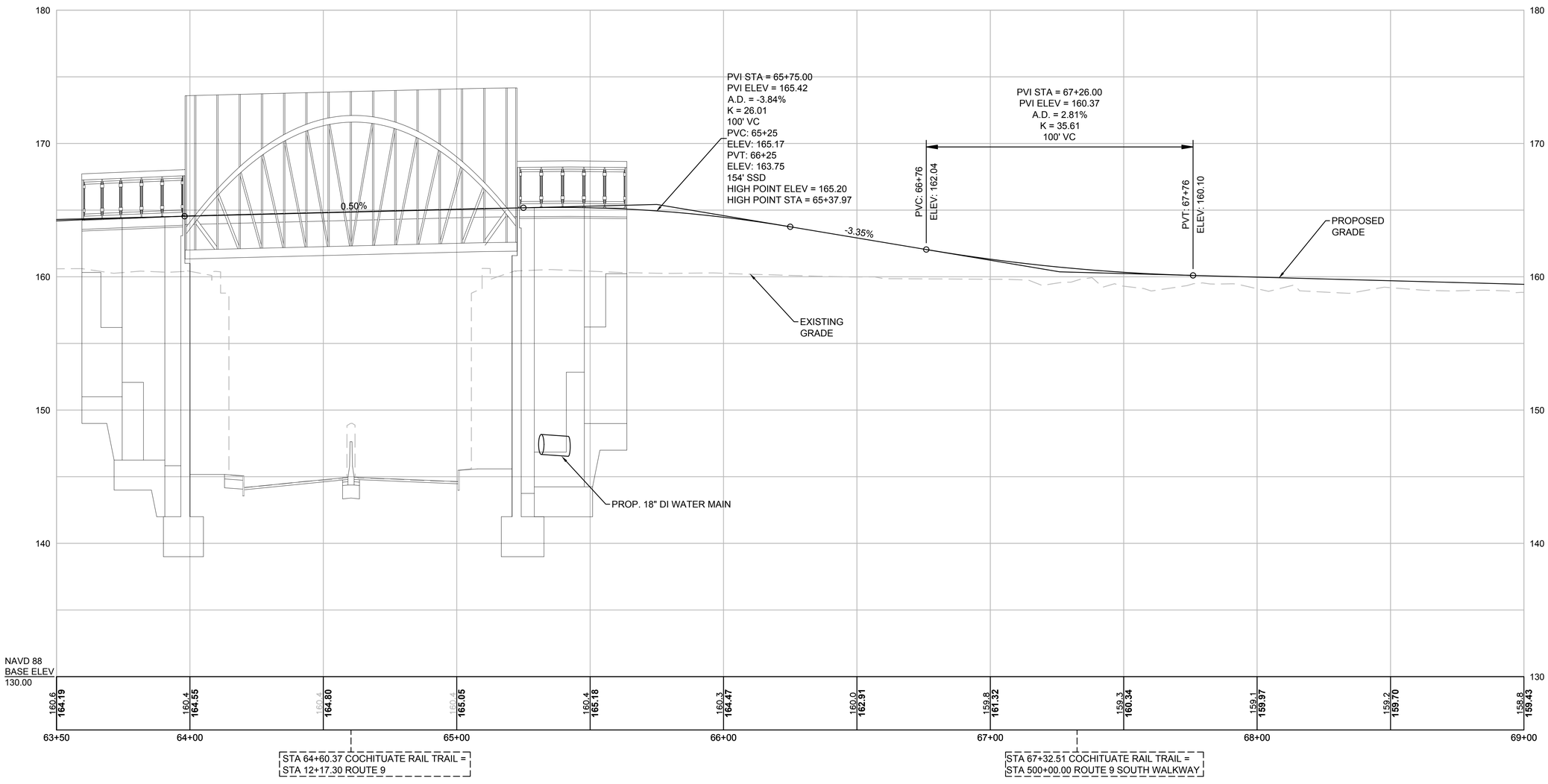

CONTINUED ON SHEET NO. 48

CONTINUED ON SHEET NO. 50

HOR. SCALE IN FEET
20 0 20 40
4 0 4 8
VER. SCALE IN FEET

FOR CONSTRUCTION PLANS:
SEE SHEET NO. 23

NATICK/FRAMINGHAM
COCHITUATE RAIL TRAIL

STATE	FED. AID PROJ. NO.	SHEET NO.	TOTAL SHEETS
MA	STP(TE)/TAP/CMQ-003S(206)	50	253
PROJECT FILE NO.	607732		

PROFILE

4578 PROFILES.DWG Plotted on 20-Aug-2018 11:20 AM

CRT MAIN BL

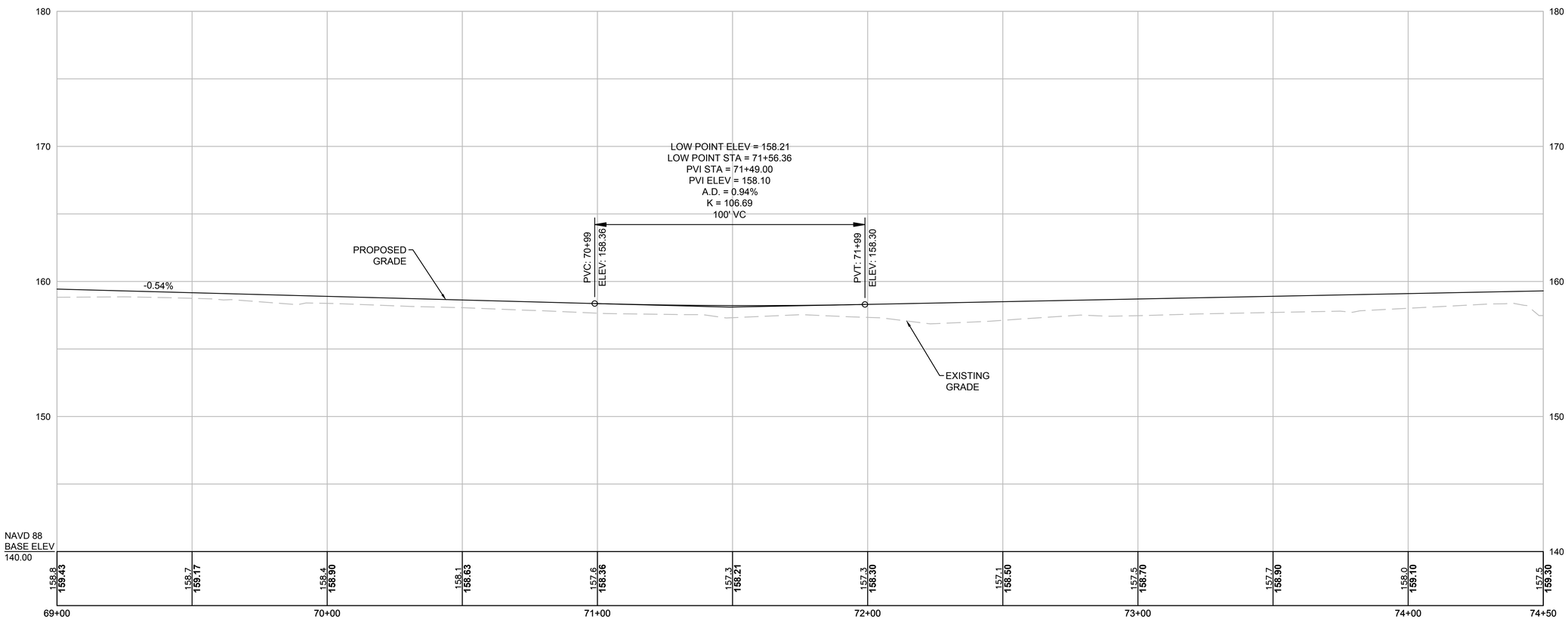

CONTINUED ON SHEET NO. 49

CONTINUED ON SHEET NO. 51

HOR. SCALE IN FEET
20 0 20 40
4 0 4 8
VER. SCALE IN FEET

FOR CONSTRUCTION PLANS:
SEE SHEET NO. 26

NATICK/FRAMINGHAM
COCHITUATE RAIL TRAIL

STATE	FED. AID PROJ. NO.	SHEET NO.	TOTAL SHEETS
MA	STP(TE)/TAP/CMQ-003S(206)	51	253
PROJECT FILE NO.	607732		

PROFILE

4578 PROFILES.DWG Plotted on 20-Aug-2018 11:20 AM

CRT MAIN BL

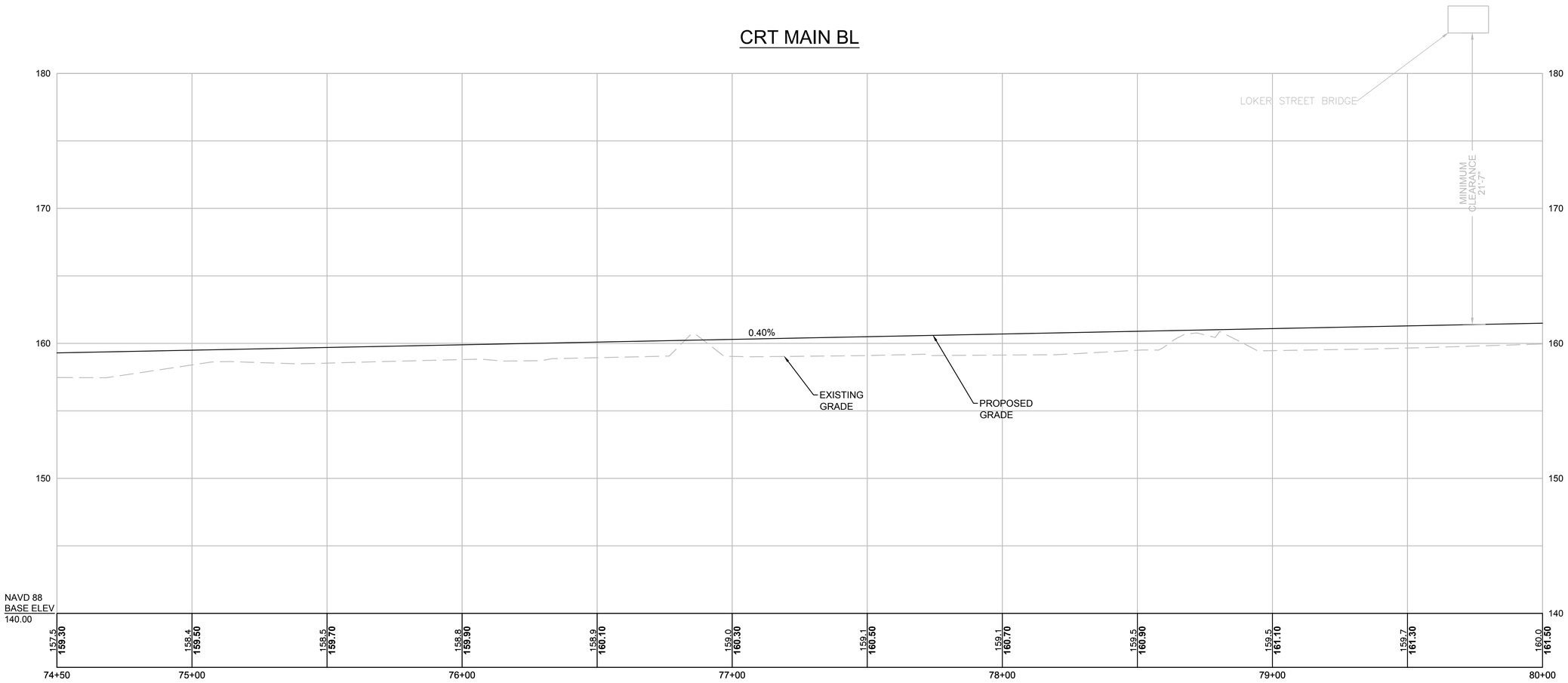

CONTINUED ON SHEET NO. 50

CONTINUED ON SHEET NO. 52

HOR. SCALE IN FEET
20 0 20 40
4 0 4 8
VER. SCALE IN FEET

FOR CONSTRUCTION PLANS:
SEE SHEET NO. 27

NATICK/FRAMINGHAM
COCHITUATE RAIL TRAIL

STATE	FED. AID PROJ. NO.	SHEET NO.	TOTAL SHEETS
MA	STP(TE)/TAP/CMQ-003S(206)	52	253
PROJECT FILE NO.	607732		

PROFILE

4578 PROFILES.DWG Plotted on 20-Aug-2018 11:20 AM

CONTINUED ON SHEET NO. 51

CONTINUED ON SHEET NO. 53

CRT MAIN BL

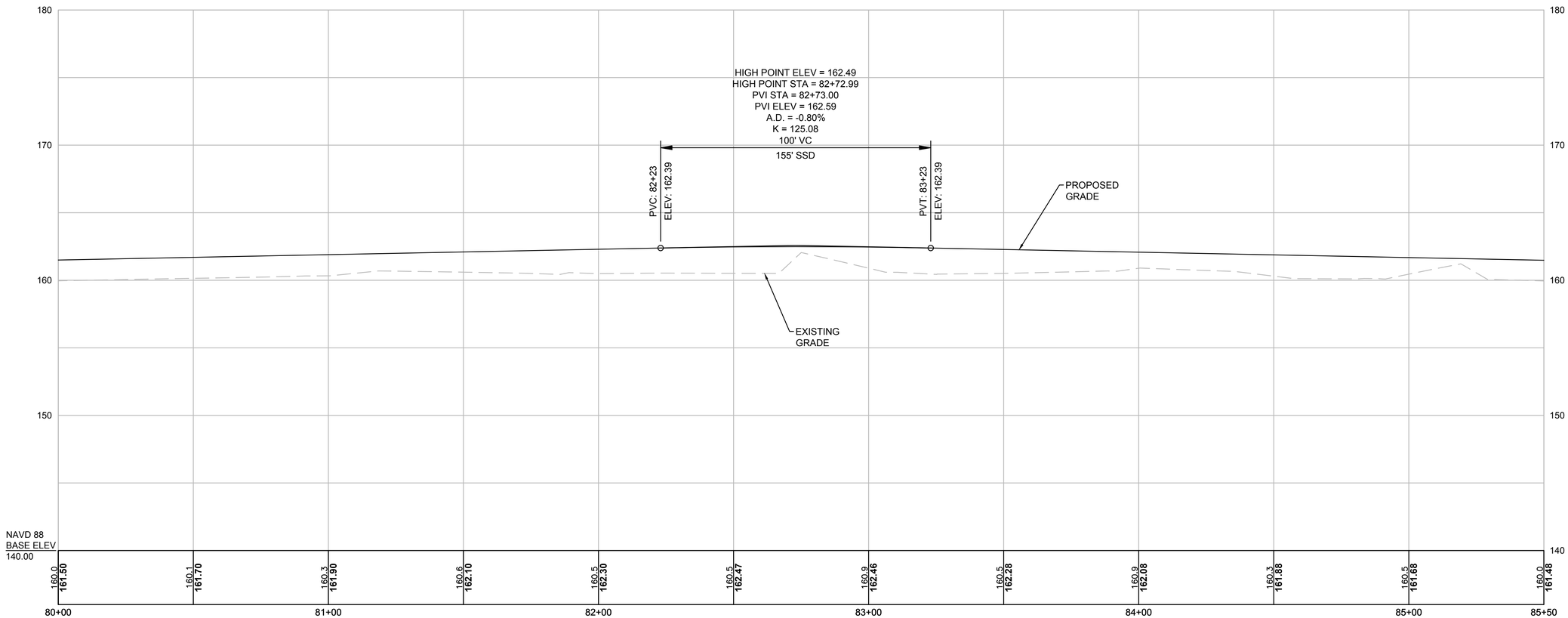

HOR. SCALE IN FEET
20 0 20 40
4 0 4 8
VER. SCALE IN FEET

FOR CONSTRUCTION PLANS:
SEE SHEET NO. 28

NATICK/FRAMINGHAM
COCHITUATE RAIL TRAIL

STATE	FED. AID PROJ. NO.	SHEET NO.	TOTAL SHEETS
MA	STP(TE)/TAP/CMQ-003S(206)	53	253
PROJECT FILE NO.	607732		

PROFILE

4578 PROFILES.DWG Plotted on 20-Aug-2018 11:21 AM

CRT MAIN BL

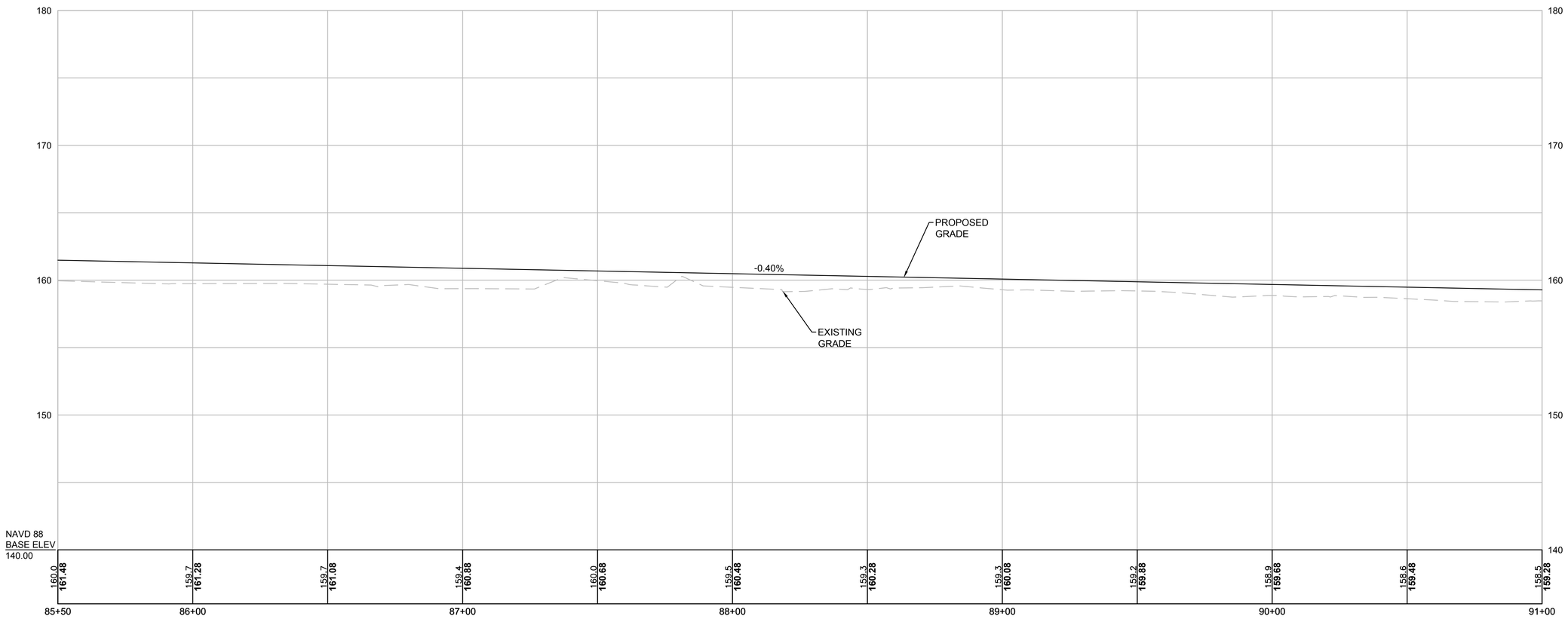

CONTINUED ON SHEET NO. 52

CONTINUED ON SHEET NO. 54

HOR. SCALE IN FEET
20 0 20 40
4 0 4 8
VER. SCALE IN FEET

FOR CONSTRUCTION PLANS:
SEE SHEET NO. 29

NATICK/FRAMINGHAM
COCHITUATE RAIL TRAIL

STATE	FED. AID PROJ. NO.	SHEET NO.	TOTAL SHEETS
MA	STP(TE)/TAP/CMQ-003S(206)	54	253
PROJECT FILE NO.	607732		

PROFILE

Plotted on 20-Aug-2018 11:21 AM

4578 PROFILES.DWG

CONTINUED ON SHEET NO. 53

CONTINUED ON SHEET NO. 55

CRT MAIN BL

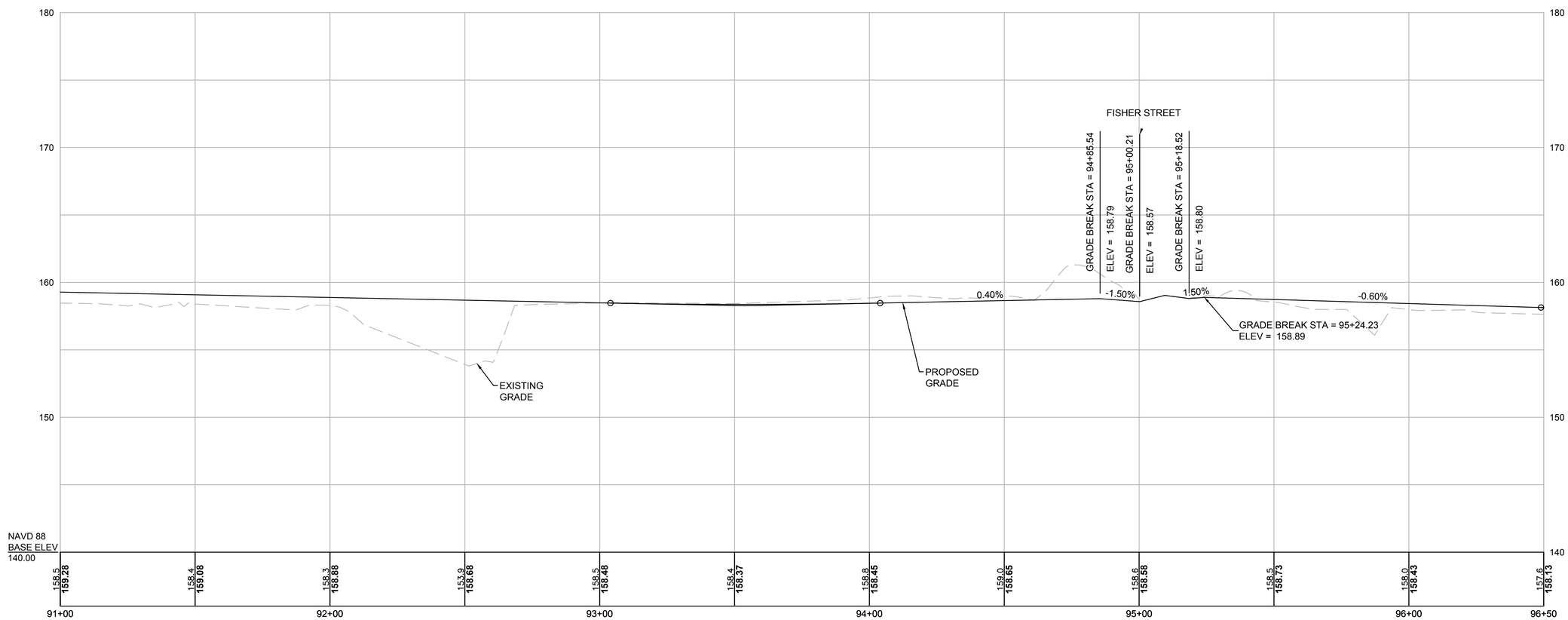

HOR. SCALE IN FEET
20 0 20 40
4 0 4 8
VER. SCALE IN FEET

FOR CONSTRUCTION PLANS:
SEE SHEET NO. 30

NATICK/FRAMINGHAM
COCHITUATE RAIL TRAIL

STATE	FED. AID PROJ. NO.	SHEET NO.	TOTAL SHEETS
MA	STP(TE)/TAP/CMQ-003S(206)	55	253
PROJECT FILE NO.	607732		

PROFILE

4578 PROFILES.DWG Plotted on 20-Aug-2018 11:21 AM

CRT MAIN BL

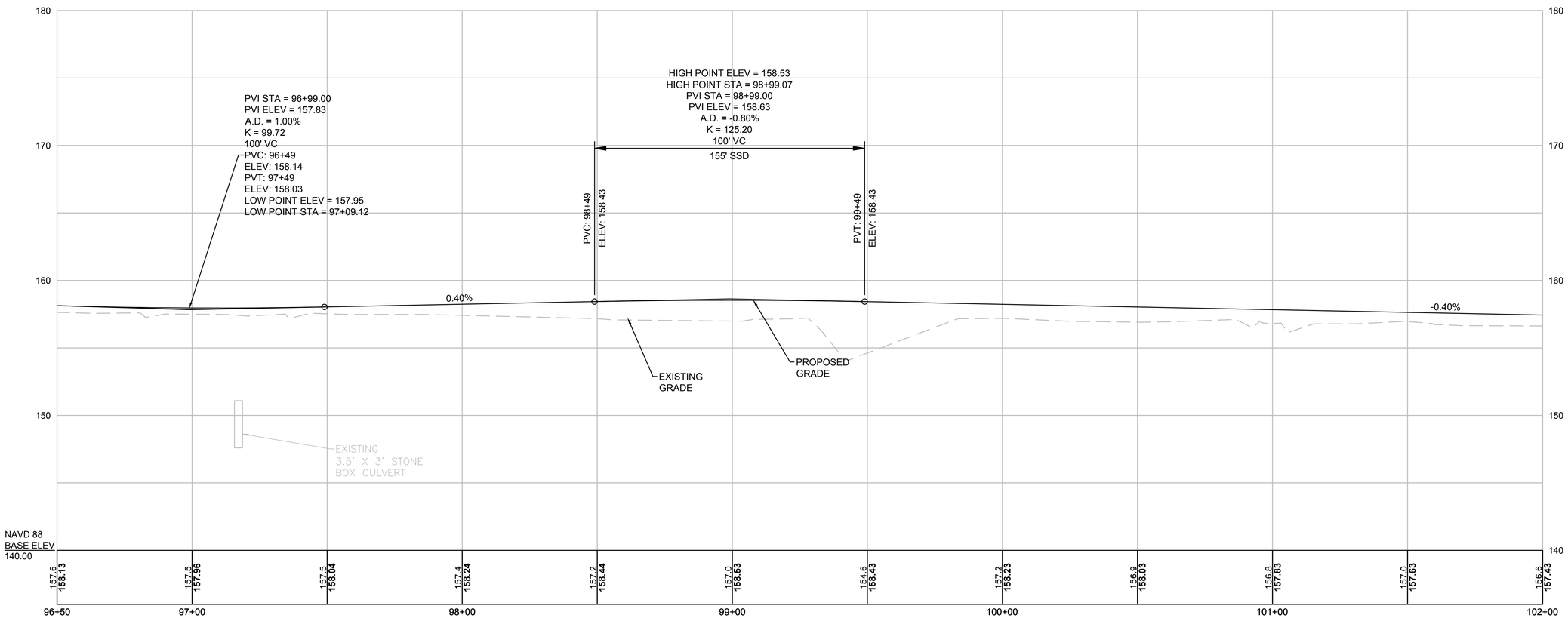

CONTINUED ON SHEET NO. 54

CONTINUED ON SHEET NO. 56

HOR. SCALE IN FEET
20 0 20 40
4 0 4 8
VER. SCALE IN FEET

FOR CONSTRUCTION PLANS:
SEE SHEET NO. 31

NATICK/FRAMINGHAM
COCHITUATE RAIL TRAIL

STATE	FED. AID PROJ. NO.	SHEET NO.	TOTAL SHEETS
MA	STP(TE)/TAP/CMQ-003S(206)	56	253
PROJECT FILE NO.	607732		

PROFILE

4578 PROFILES.DWG Plotted on 20-Aug-2018 11:21 AM

CRT MAIN BL

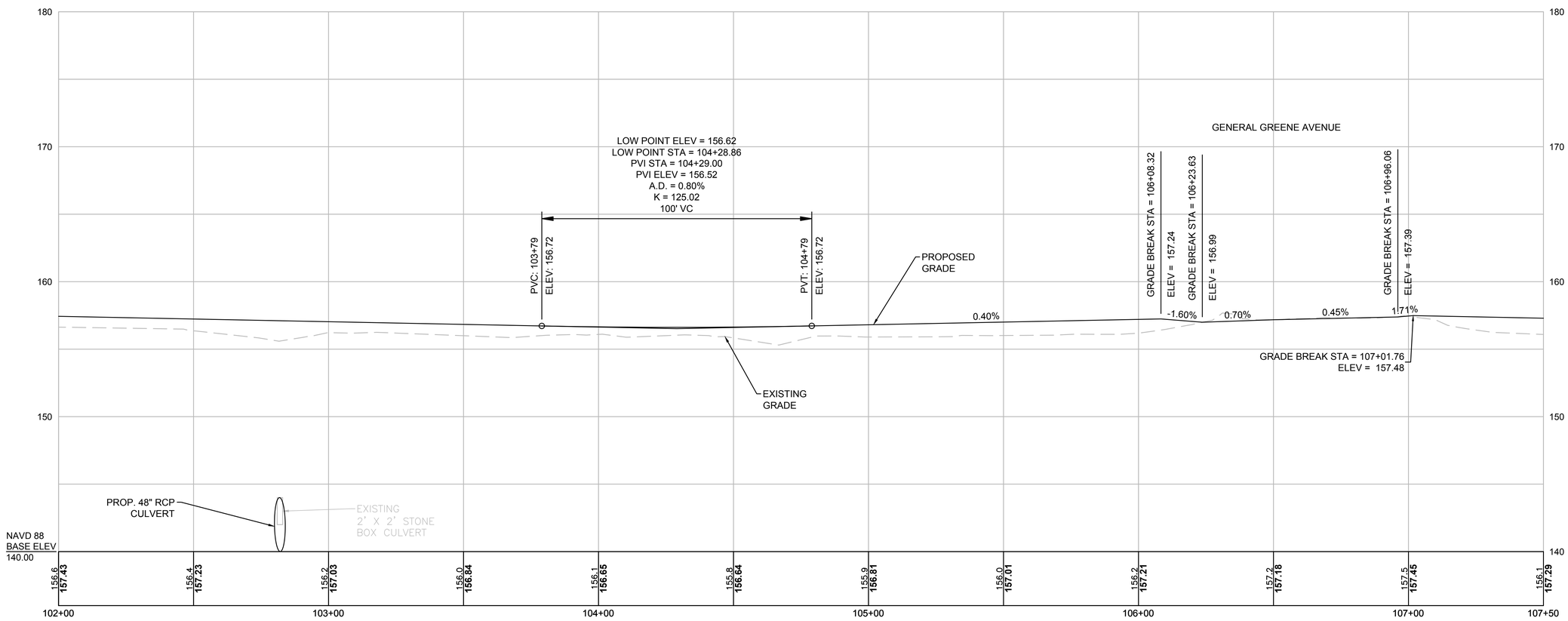

CONTINUED ON SHEET NO. 55

CONTINUED ON SHEET NO. 57

HOR. SCALE IN FEET
20 0 20 40
4 0 4 8
VER. SCALE IN FEET

FOR CONSTRUCTION PLANS:
SEE SHEET NO. 32

NATICK/FRAMINGHAM
COCHITUATE RAIL TRAIL

STATE	FED. AID PROJ. NO.	SHEET NO.	TOTAL SHEETS
MA	STP(TE)/TAP/CMQ-003S(206)	57	253
PROJECT FILE NO.	607732		

PROFILE

4578 PROFILES.DWG Plotted on 20-Aug-2018 11:22 AM

CRT MAIN BL

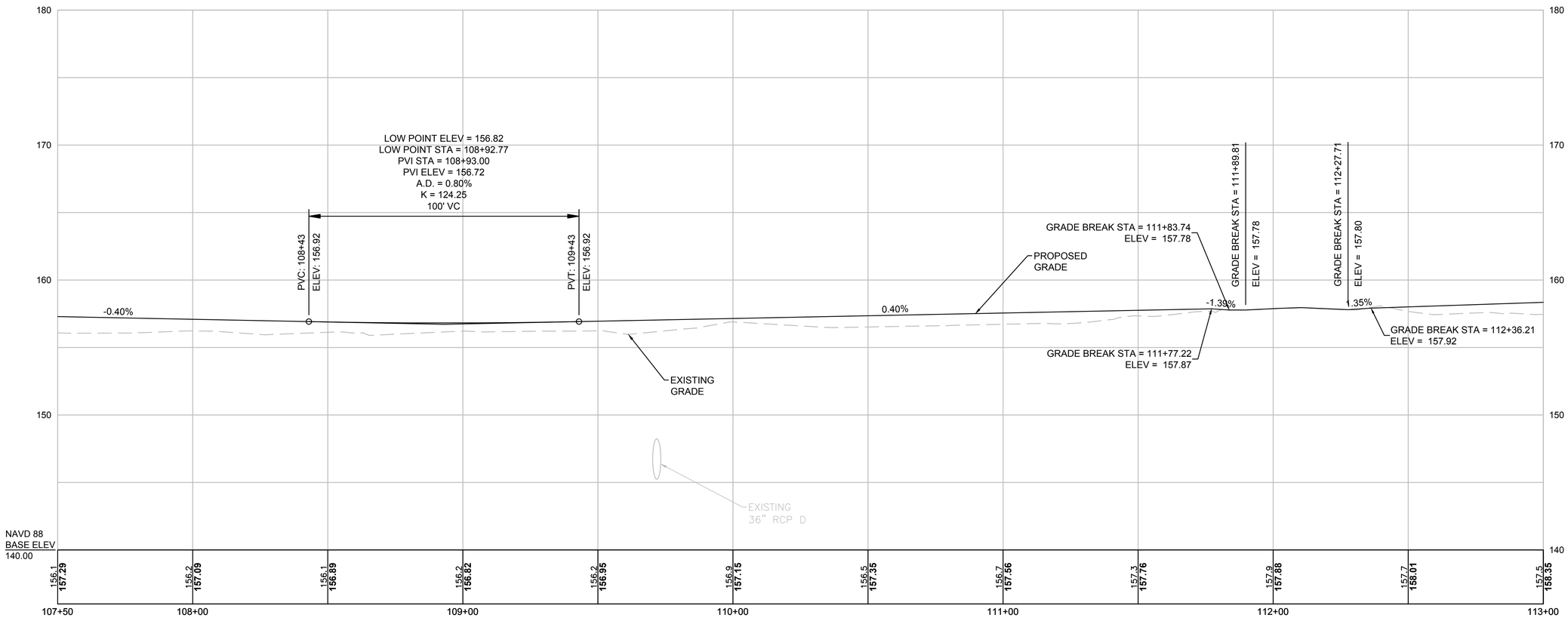

CONTINUED ON SHEET NO. 56

CONTINUED ON SHEET NO. 58

HOR. SCALE IN FEET
20 0 20 40
4 0 4 8
VER. SCALE IN FEET

FOR CONSTRUCTION PLANS:
SEE SHEET NO. 33

NATICK/FRAMINGHAM
COCHITUATE RAIL TRAIL

STATE	FED. AID PROJ. NO.	SHEET NO.	TOTAL SHEETS
MA	STP(TE)/TAP/CMQ-003S(206)	58	253
PROJECT FILE NO.	607732		

PROFILE

4578 PROFILES.DWG Plotted on 20-Aug-2018 11:22 AM

CRT MAIN BL

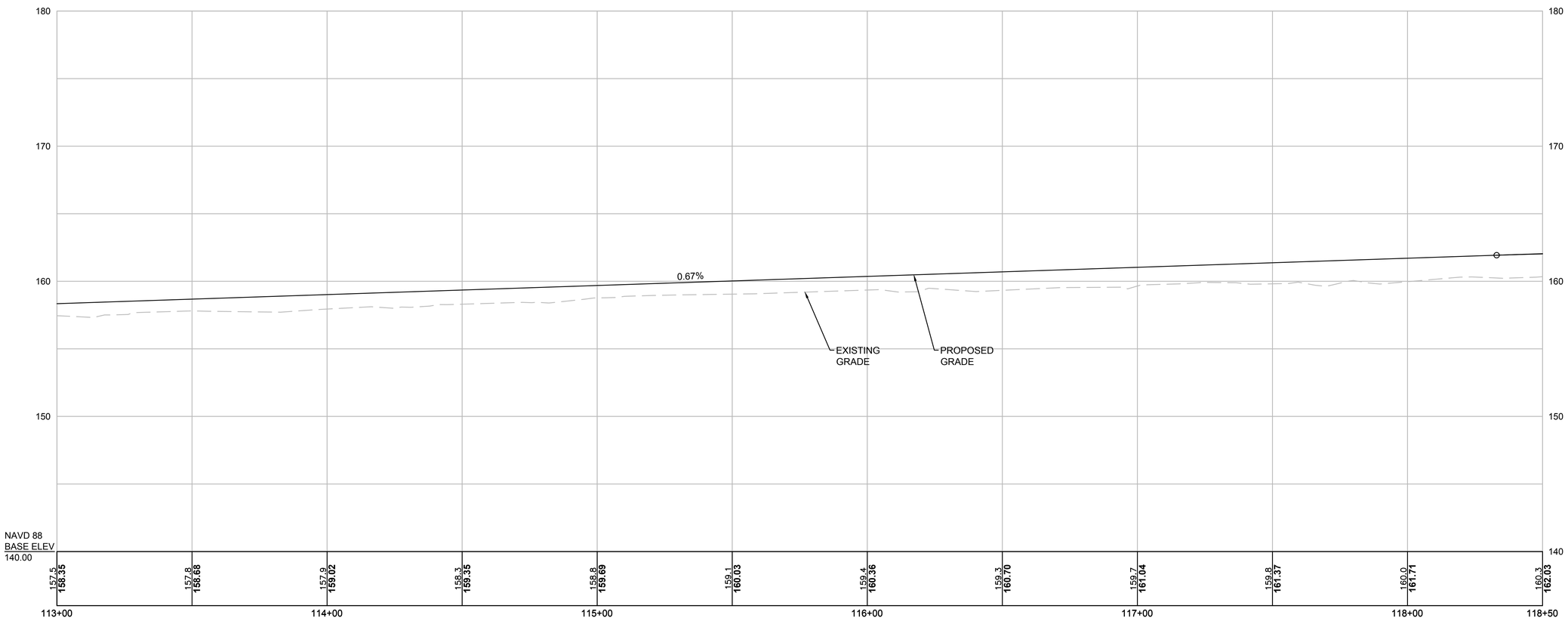

CONTINUED ON SHEET NO. 57

CONTINUED ON SHEET NO. 59

HOR. SCALE IN FEET
20 0 20 40
4 0 4 8
VER. SCALE IN FEET

FOR CONSTRUCTION PLANS:
SEE SHEET NO. 34

NATICK/FRAMINGHAM
COCHITUATE RAIL TRAIL

STATE	FED. AID PROJ. NO.	SHEET NO.	TOTAL SHEETS
MA	STP(TE)/TAP/CMQ-003S(206)	59	253
PROJECT FILE NO.	607732		

PROFILE

4578 PROFILES.DWG Plotted on 20-Aug-2018 11:22 AM

CRT MAIN BL

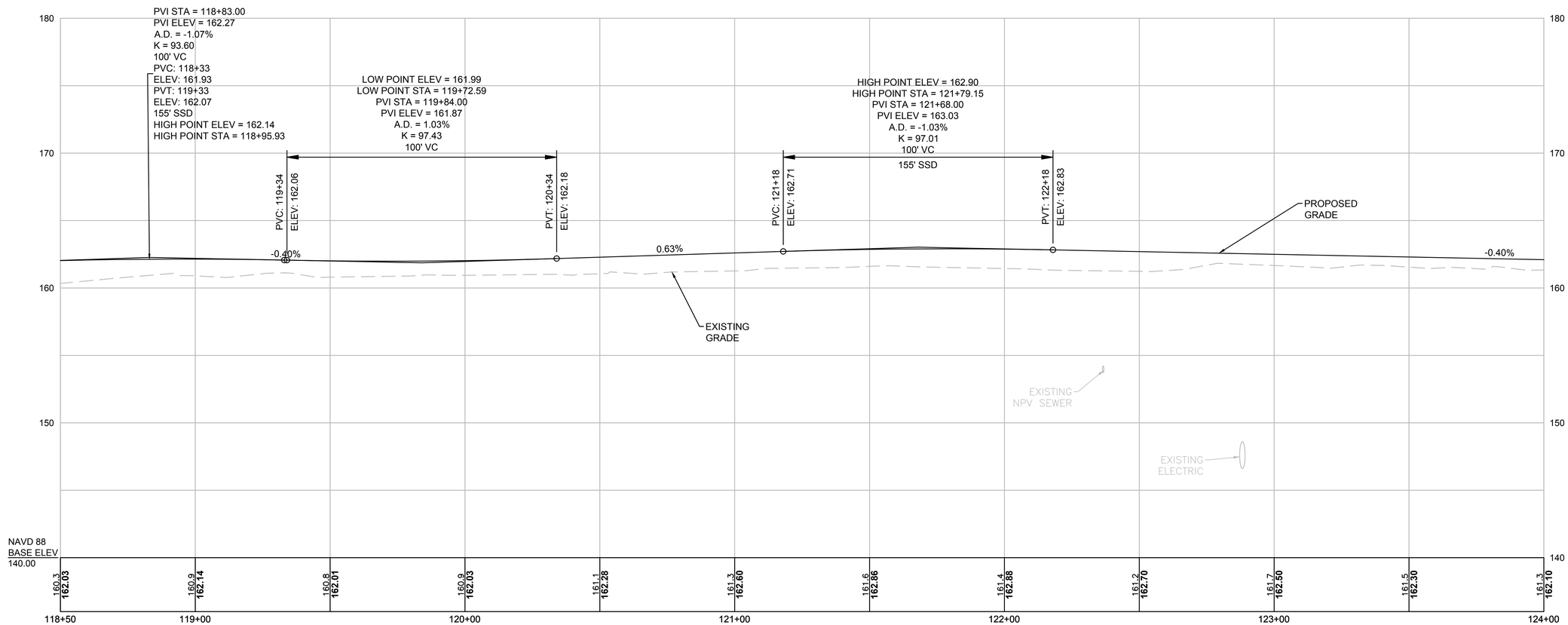

CONTINUED ON SHEET NO. 58

CONTINUED ON SHEET NO. 60

HOR. SCALE IN FEET
20 0 20 40
4 0 4 8
VER. SCALE IN FEET

FOR CONSTRUCTION PLANS:
SEE SHEET NO. 35

NATICK/FRAMINGHAM
COCHITUATE RAIL TRAIL

STATE	FED. AID PROJ. NO.	SHEET NO.	TOTAL SHEETS
MA	STP(TE)/TAP/CMQ-003S(206)	60	253
PROJECT FILE NO.	607732		

PROFILE

4578 PROFILES.DWG Plotted on 20-Aug-2018 11:22 AM

CRT MAIN BL

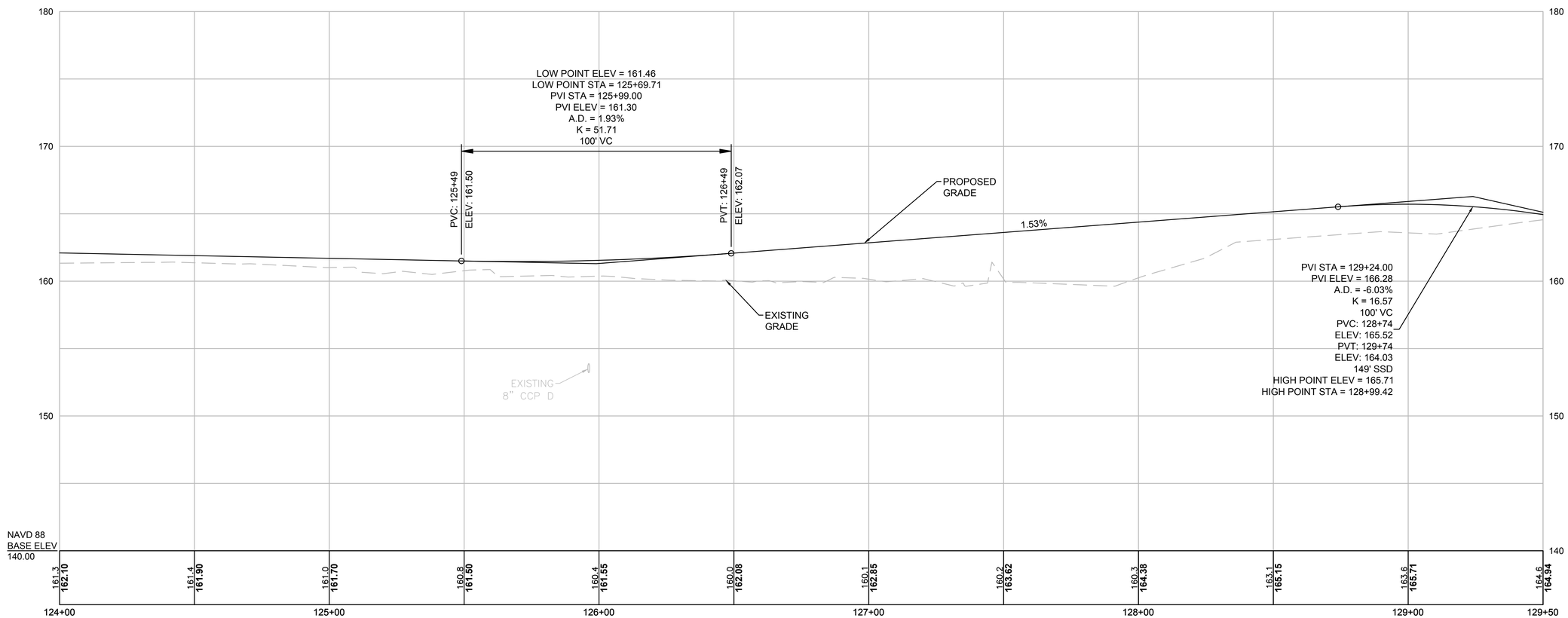

CONTINUED ON SHEET NO. 59

CONTINUED ON SHEET NO. 61

HOR. SCALE IN FEET
20 0 20 40
4 0 4 8
VER. SCALE IN FEET

FOR CONSTRUCTION PLANS:
SEE SHEET NO. 36

NATICK/FRAMINGHAM
COCHITUATE RAIL TRAIL

STATE	FED. AID PROJ. NO.	SHEET NO.	TOTAL SHEETS
MA	STP(TE)/TAP/CMQ-003S(206)	61	253
PROJECT FILE NO.	607732		

PROFILE

4578 PROFILES.DWG Plotted on 20-Aug-2018 1:01 PM

CRT MAIN BL

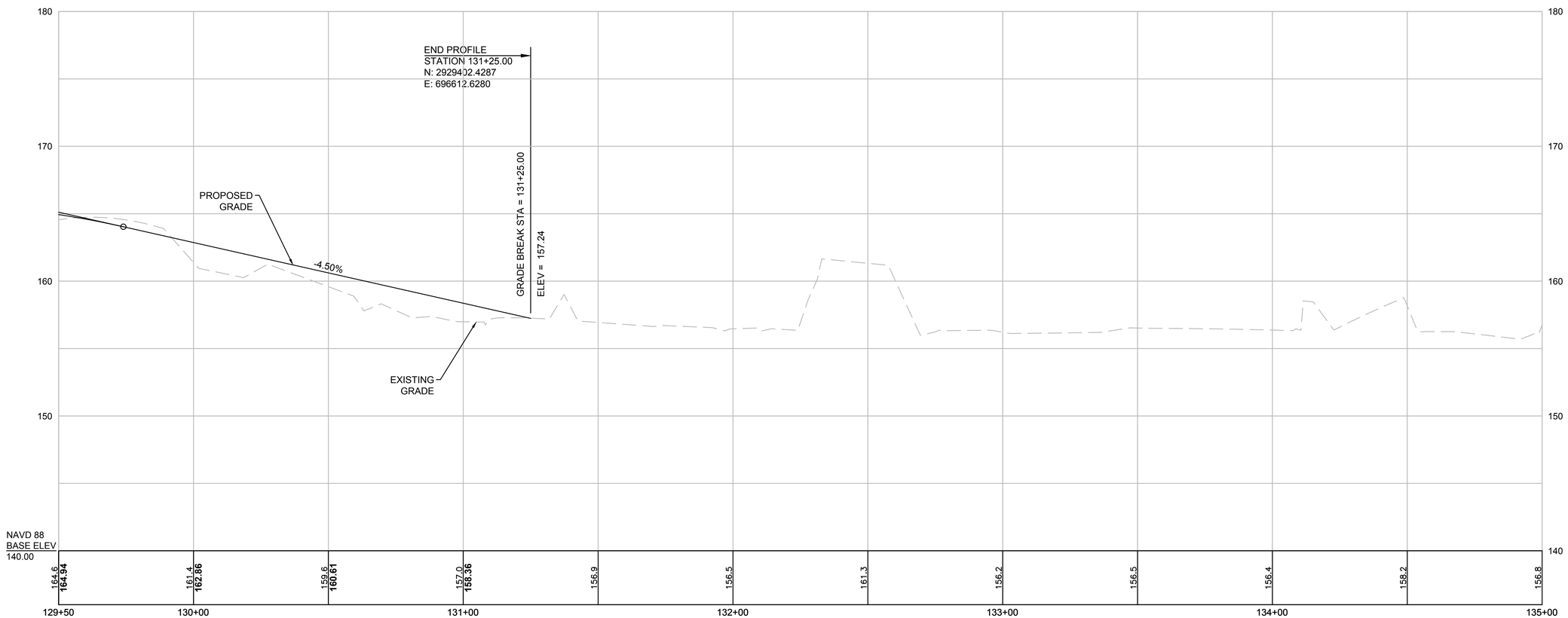

CONTINUED ON SHEET NO. 60

HOR. SCALE IN FEET
20 0 20 40
4 0 4 8
VER. SCALE IN FEET

FOR CONSTRUCTION PLANS:
SEE SHEET NO. 37

NATICK/FRAMINGHAM
COCHITUATE RAIL TRAIL

STATE	FED. AID PROJ. NO.	SHEET NO.	TOTAL SHEETS
MA	STP(TE)/TAP/CMQ-003S(206)	62	253
PROJECT FILE NO.	607732		

PROFILE

4578 PROFILES.DWG Plotted on 20-Aug-2018 1:01 PM

SPEEN STREET SPUR

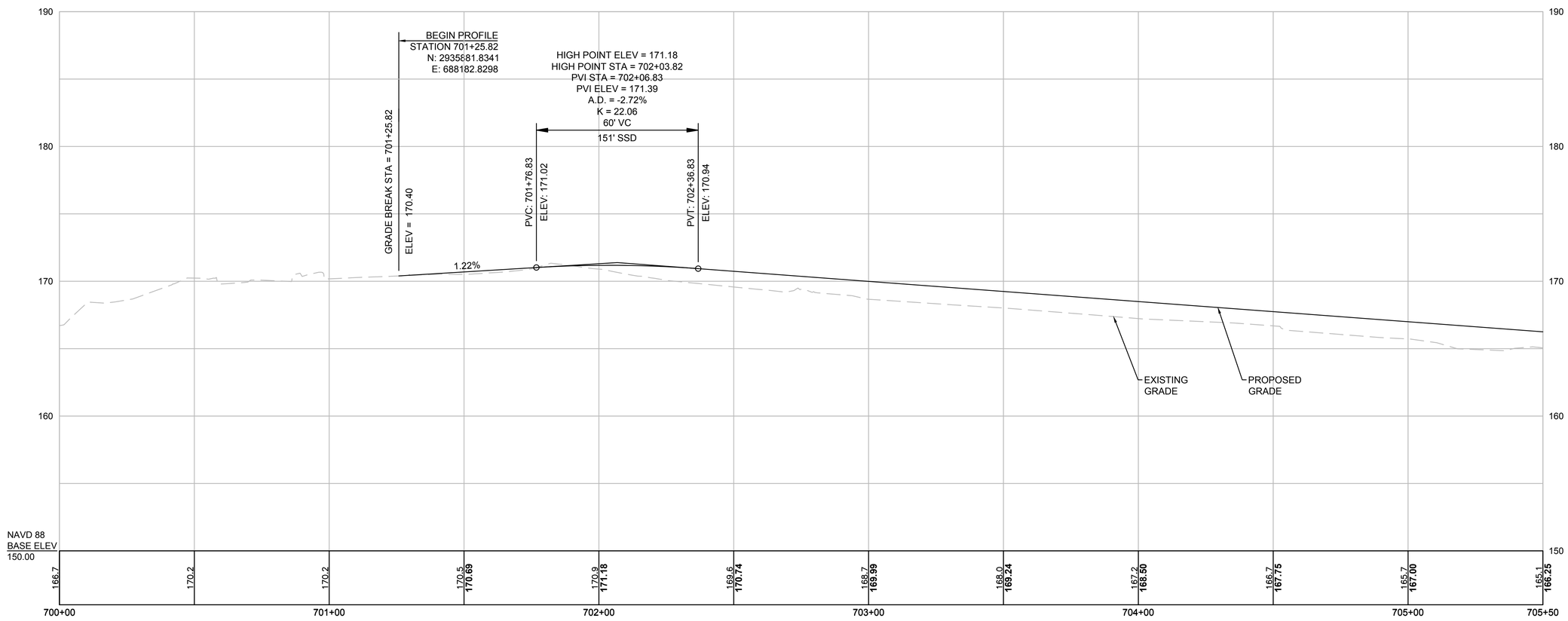

CONTINUED ON SHEET NO. 63

HOR. SCALE IN FEET
20 0 20 40
4 0 4 8
VER. SCALE IN FEET

FOR CONSTRUCTION PLANS:
SEE SHEET NOS. 14-15

NATICK/FRAMINGHAM
COCHITUATE RAIL TRAIL

STATE	FED. AID PROJ. NO.	SHEET NO.	TOTAL SHEETS
MA	STP(TE)/TAP/CMQ-003S(206)	63	253
PROJECT FILE NO.	607732		

PROFILE

4578 PROFILES.DWG Plotted on 20-Aug-2018 1:01 PM

SPEEN STREET SPUR

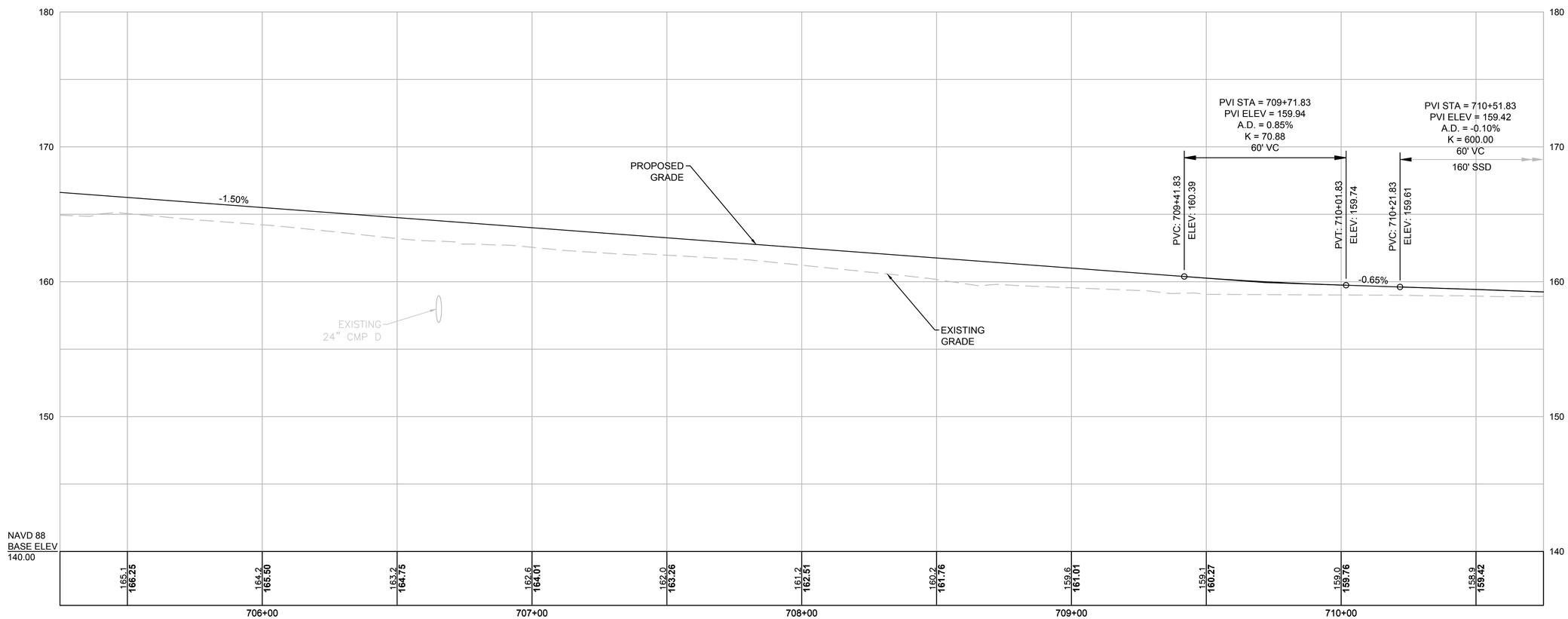

CONTINUED ON SHEET NO. 62

CONTINUED ON SHEET NO. 64

HOR. SCALE IN FEET
20 0 20 40
4 0 4 8
VER. SCALE IN FEET

FOR CONSTRUCTION PLANS:
SEE SHEET NOS. 15-16

NATICK/FRAMINGHAM
COCHITUATE RAIL TRAIL

STATE	FED. AID PROJ. NO.	SHEET NO.	TOTAL SHEETS
MA	STP(TE)/TAP/CMQ-003S(206)	64	253
PROJECT FILE NO.	607732		

PROFILE

Plotted on 20-Aug-2018 1:01 PM

4578 PROFILES.DWG

SPEEN STREET SPUR

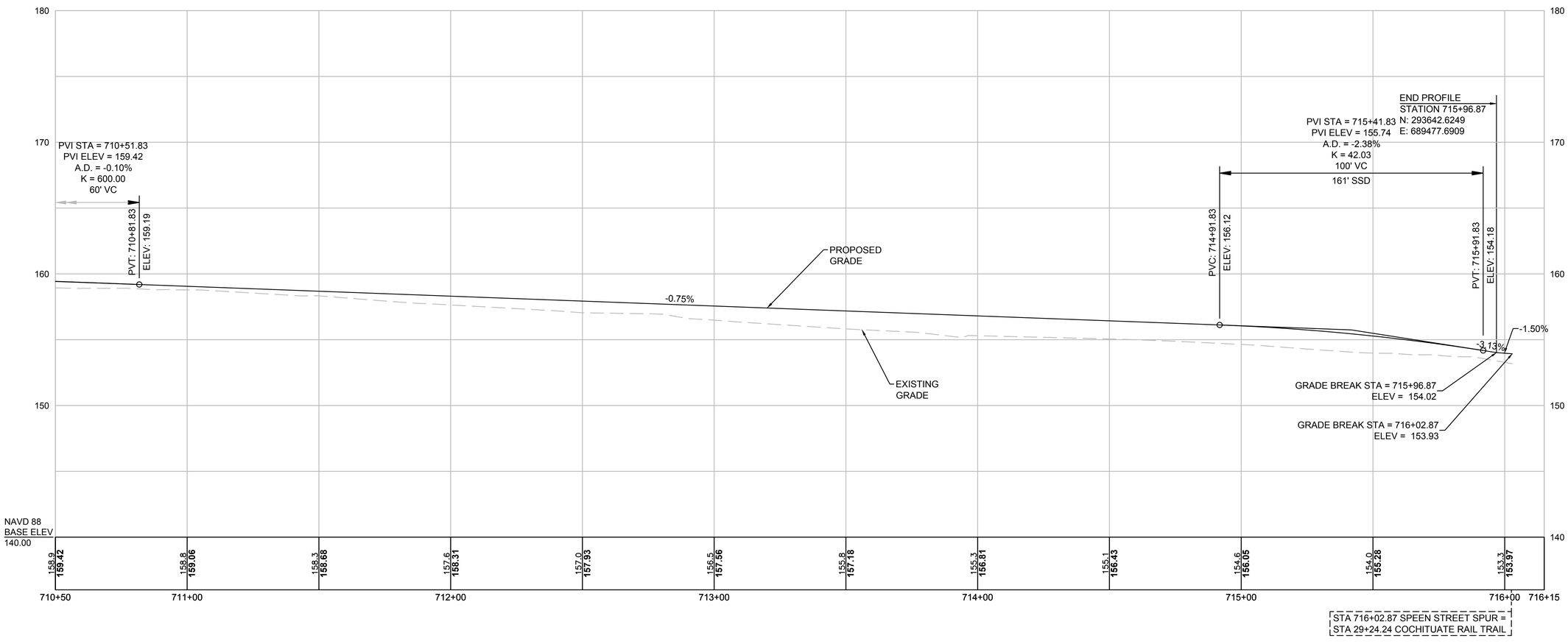

CONTINUED ON SHEET NO. 63

HOR. SCALE IN FEET
20 0 20 40
4 0 4 8
VER. SCALE IN FEET

FOR CONSTRUCTION PLANS:
SEE SHEET NOS. 13 & 16

NATICK/FRAMINGHAM
COCHITUATE RAIL TRAIL

STATE	FED. AID PROJ. NO.	SHEET NO.	TOTAL SHEETS
MA	STP(TE)/TAP/CMQ-003S(206)	65	253
PROJECT FILE NO.	607732		

PROFILE

4578 PROFILES.DWG Plotted on 20-Aug-2018 1:02 PM

ROUTE 9 NORTH WALKWAY

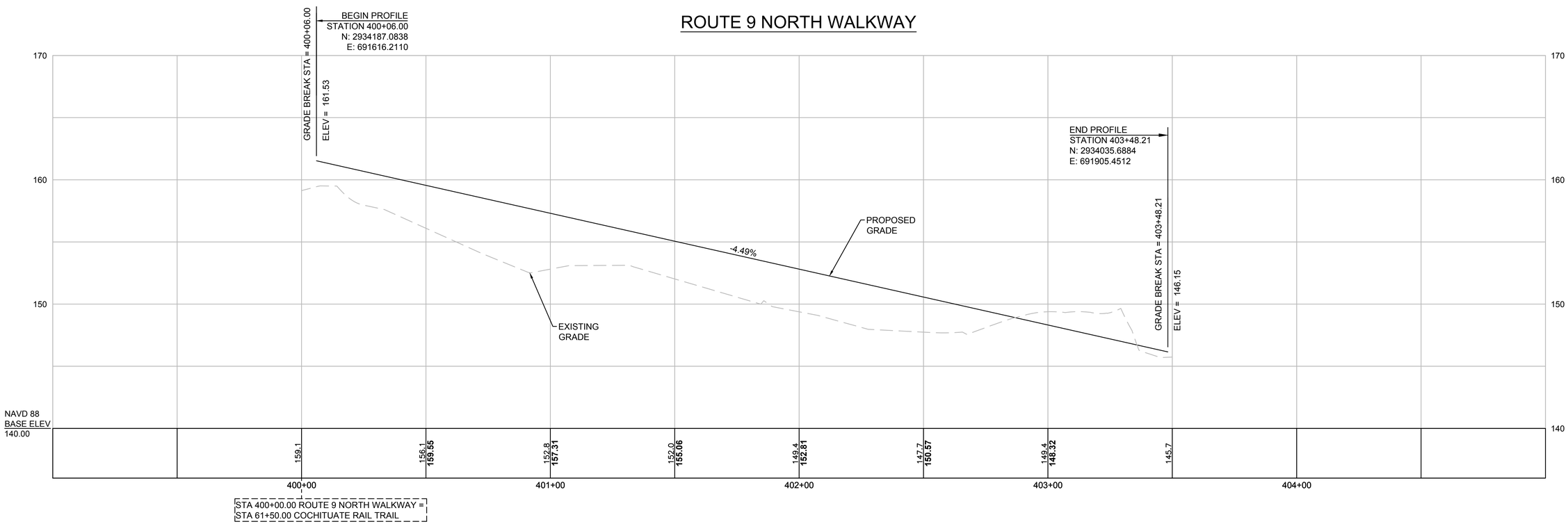

HOR. SCALE IN FEET
20 0 20 40
4 0 4 8
VER. SCALE IN FEET

FOR CONSTRUCTION PLANS:
SEE SHEET NOS. 22-23

NATICK/FRAMINGHAM
COCHITUATE RAIL TRAIL

STATE	FED. AID PROJ. NO.	SHEET NO.	TOTAL SHEETS
MA	STP(TE)/TAP/CMQ-003S(206)	66	253
PROJECT FILE NO.	607732		

PROFILE

4578 PROFILES.DWG Plotted on 20-Aug-2018 1:02 PM

BACON STREET CONNECTION

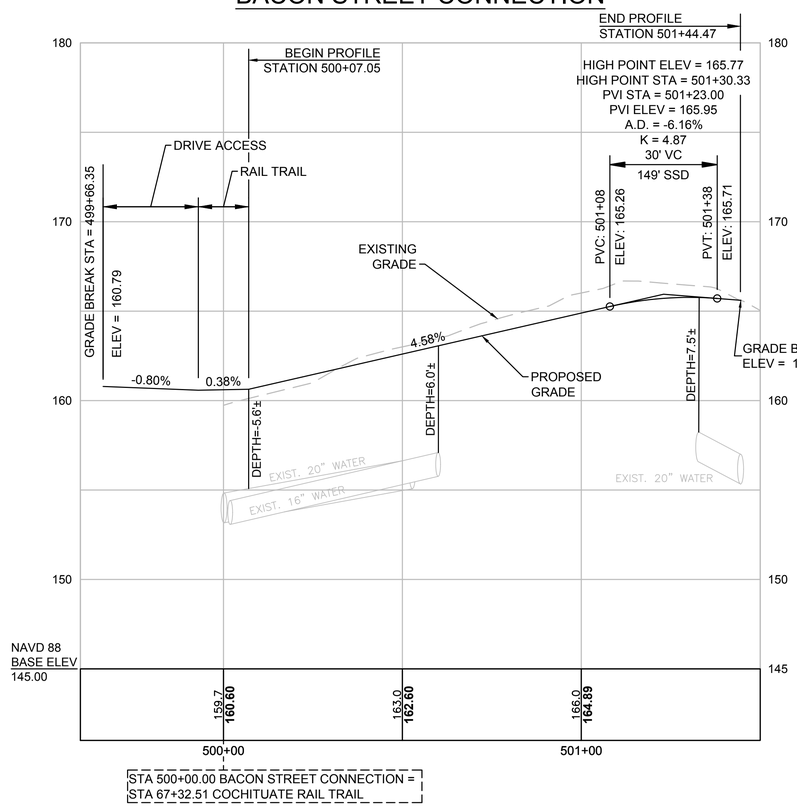

ROUTE 9 SOUTH WALKWAY

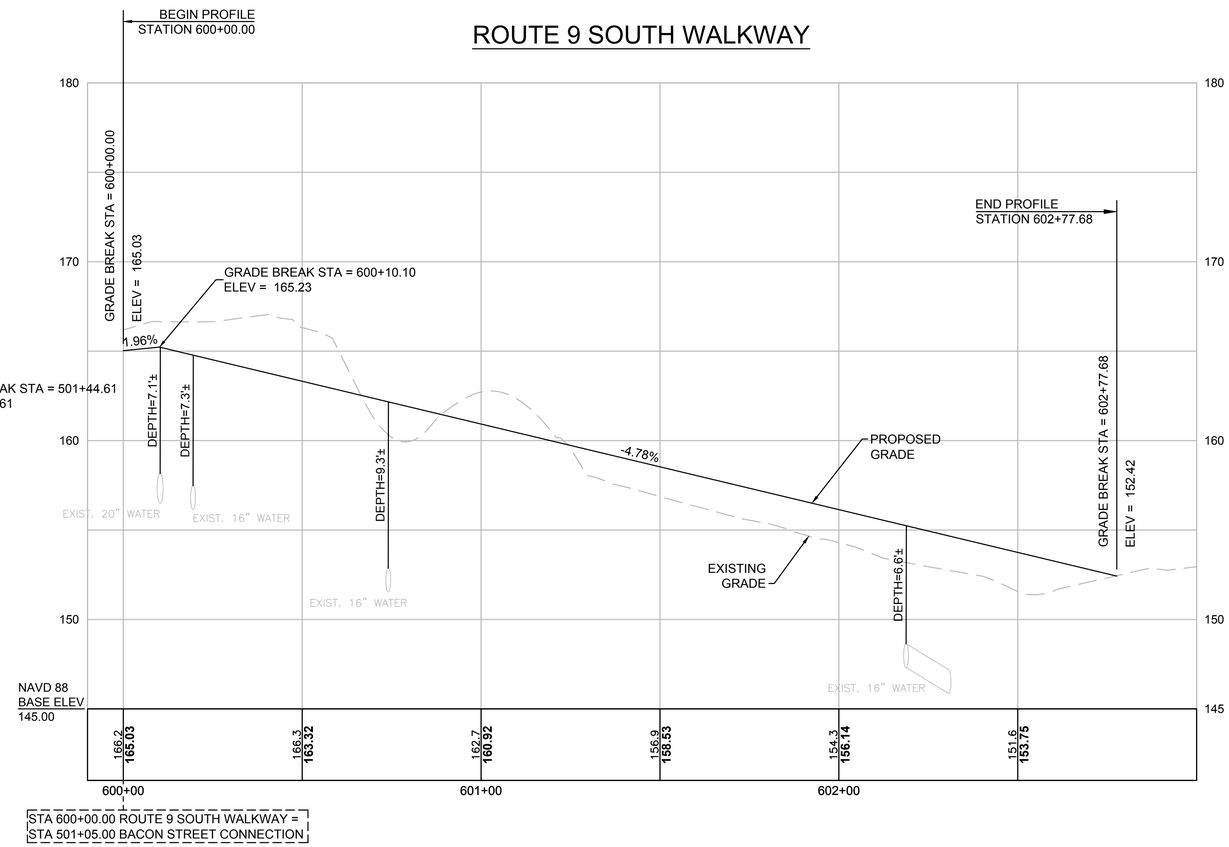

NOTE:
RUNNING SLOPES SHALL NOT EXCEED ONE-IN-20 (1:20) (5.0%).

HOR. SCALE IN FEET
20 0 20 40
4 0 4 8
VER. SCALE IN FEET

FOR CONSTRUCTION PLANS:
SEE SHEET NO. 23

NATICK/FRAMINGHAM
COCHITUATE RAIL TRAIL

STATE	FED. AID PROJ. NO.	SHEET NO.	TOTAL SHEETS
MA	STP(TE)/TAP/CMQ-003S(206)	67	253
PROJECT FILE NO.	607732		

PROFILE

ROUTE 30 NORTH WALKWAY

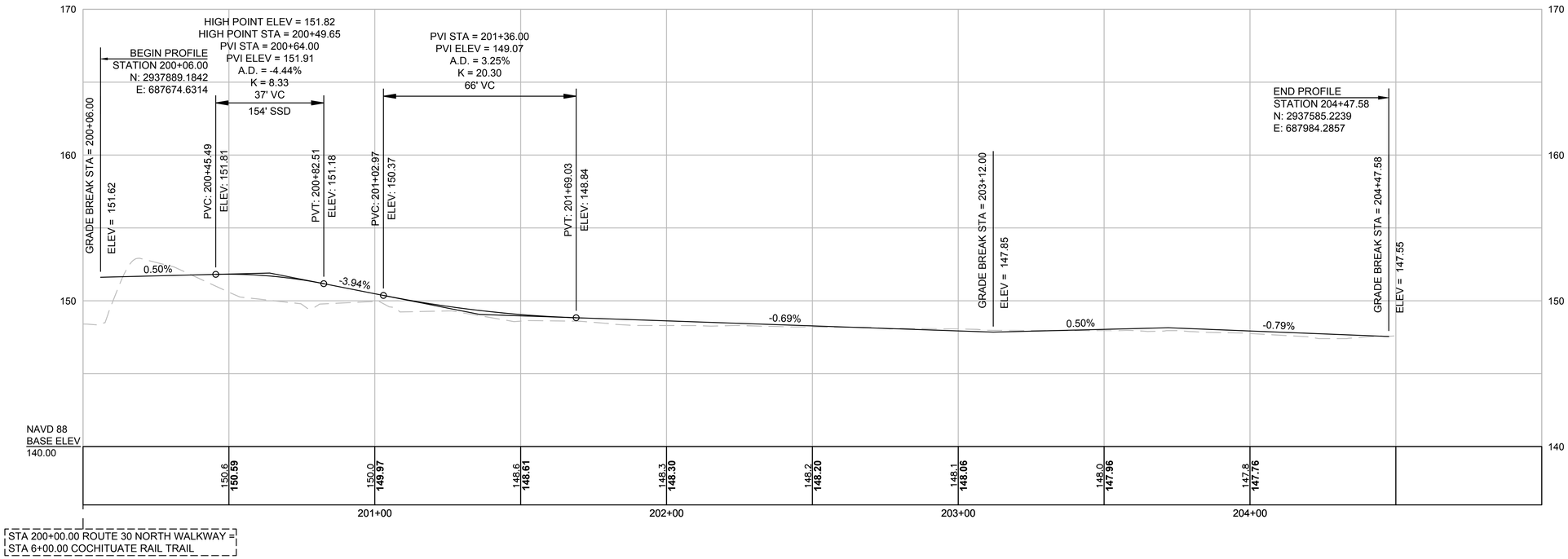

ROUTE 30 SOUTH WALKWAY

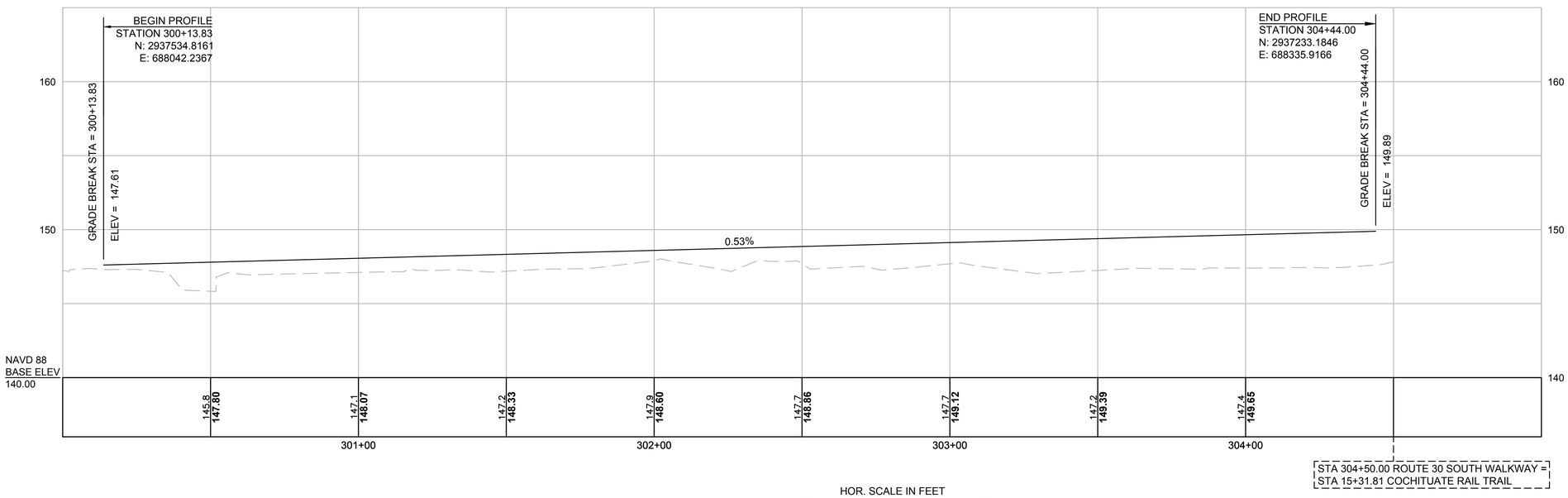

HOR. SCALE IN FEET
20 0 20 40
4 0 4 8
VER. SCALE IN FEET

FOR CONSTRUCTION PLANS:
SEE SHEET NOS. 7-8

4578 PROFILES.DWG Plotted on 20-Aug-2018 1:02 PM

NATICK/FRAMINGHAM
COCHITUATE RAIL TRAIL

STATE	FED. AID PROJ. NO.	SHEET NO.	TOTAL SHEETS
MA	STP(TE)/TAP/CMQ-003S(206)	68	253
PROJECT FILE NO.	607732		

PROFILE

ROUTE 30

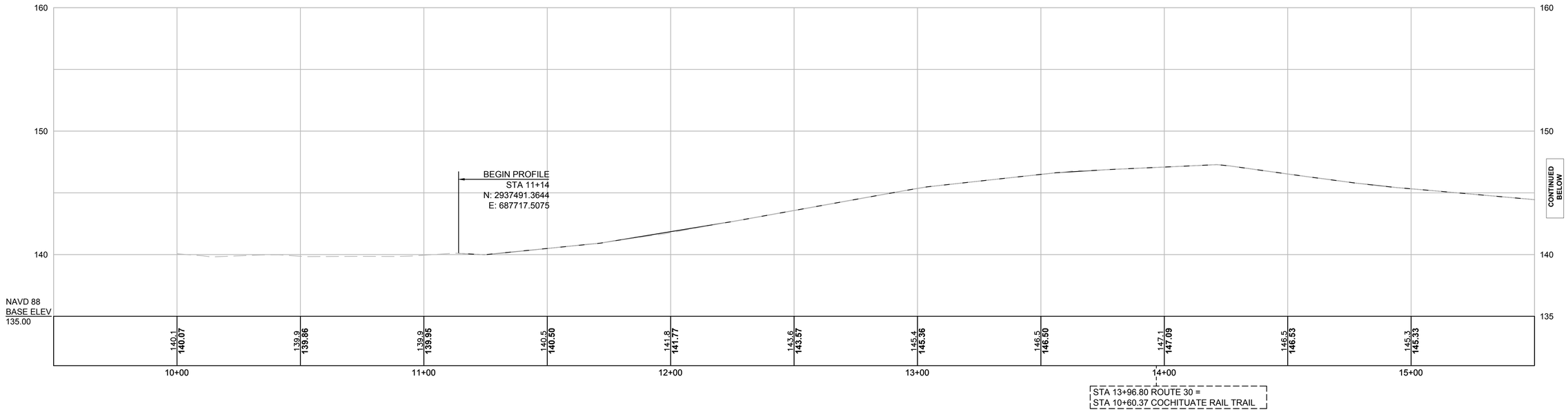

ROUTE 30

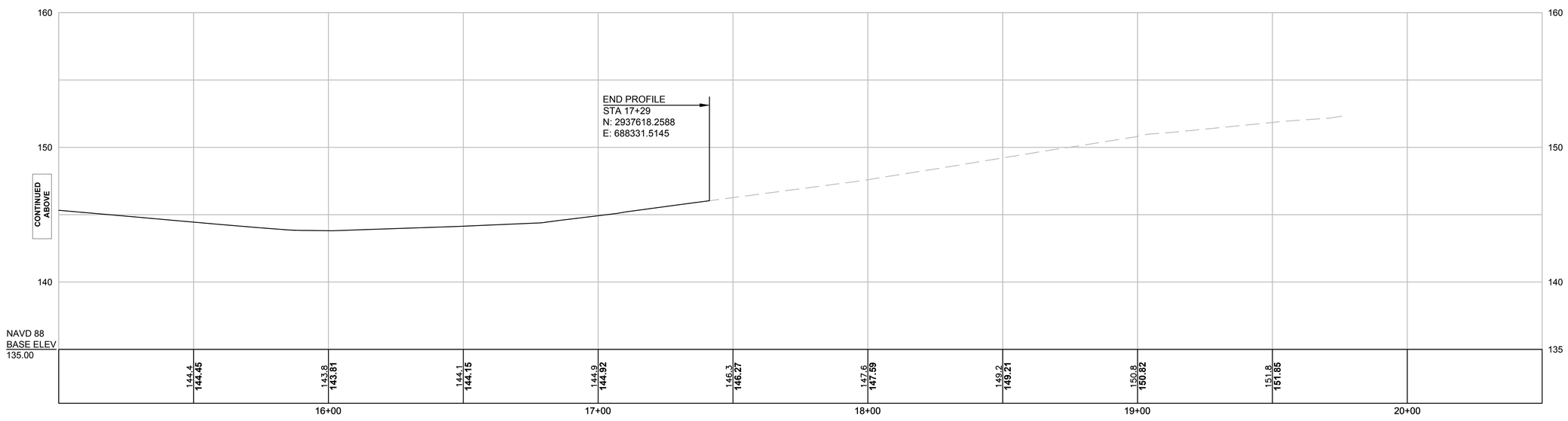

HOR. SCALE IN FEET
20 0 20 40
4 0 4 8
VER. SCALE IN FEET

FOR CONSTRUCTION PLANS:
SEE SHEET NOS. 8 & 11

4578 PROFILES.DWG Plotted on 20-Aug-2018 1:03 PM

NATICK/FRAMINGHAM
COCHITUATE RAIL TRAIL

STATE	FED. AID PROJ. NO.	SHEET NO.	TOTAL SHEETS
MA	STP(TE)/TAP/CMQ-003S(206)	69	253
PROJECT FILE NO.	607732		

CURB TIE & GRADING PLAN No. 1

CRT Main BL DATA						
Number	NORTHING START	EASTING START	CURVE DATA	LINE DATA	NORTHING END	EASTING END
BL1	2938097.6666	687458.7076		S45° 21' 43"E 203.54'	2937954.6561	687603.5368
BL2	2937954.6561	687603.5368		S43° 47' 54"E 245.66'	2937777.3447	687773.5628
BL3	2937777.3447	687773.5628		S44° 25' 34"E 239.96'	2937605.9779	687941.5300

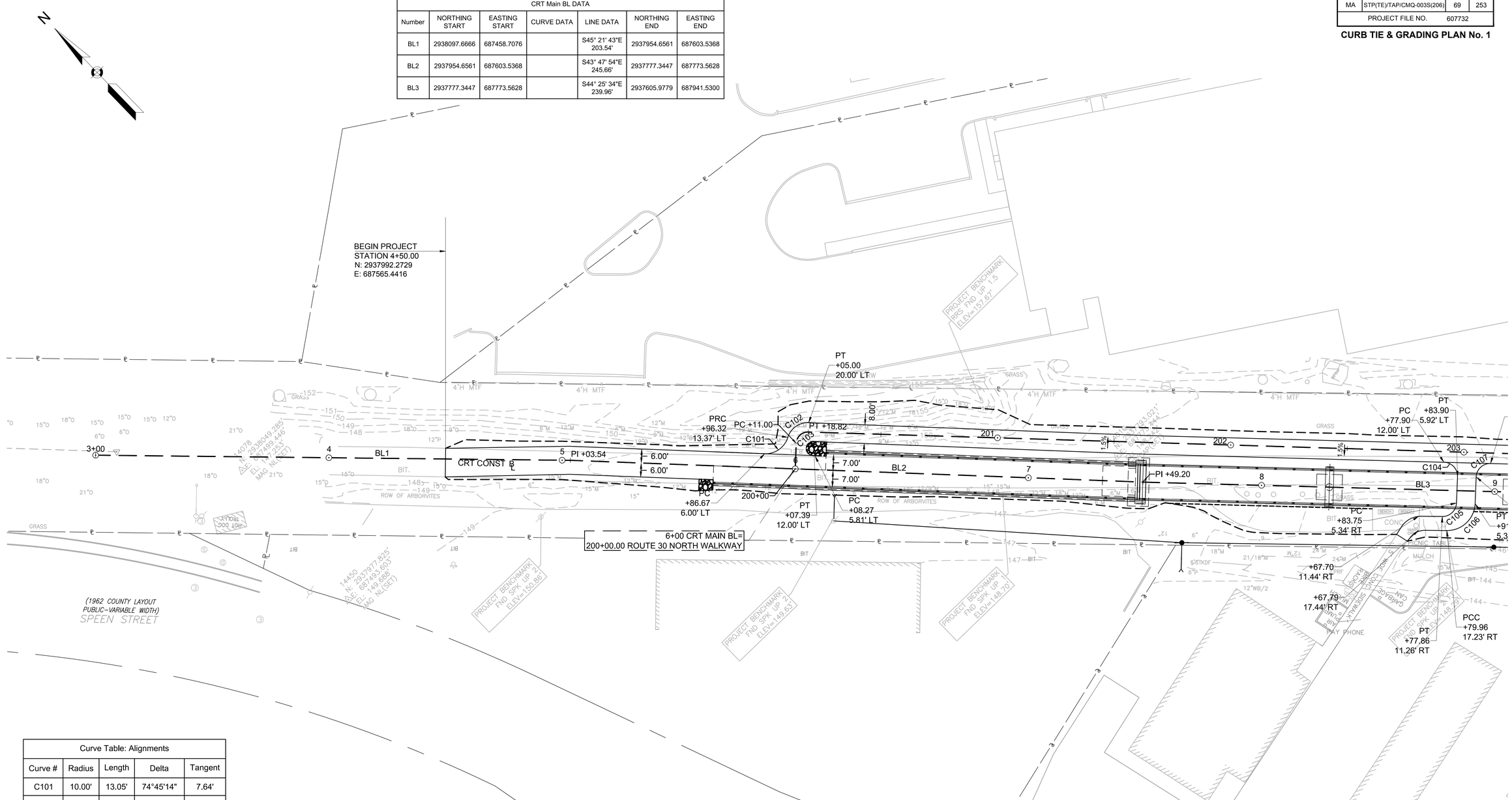

CONTINUED ON SHEET NO. 70

Curve Table: Alignments				
Curve #	Radius	Length	Delta	Tangent
C101	10.00'	13.05'	74°45'14"	7.64'
C102	9.00'	11.74'	74°45'06"	6.88'
C103	3.00'	9.45'	180°23'16"	886.83'
C104	6.00'	9.50'	90°44'08"	6.08'
C105	6.00'	9.25'	88°17'22"	5.82'
C106	12.00'	18.49'	88°17'22"	11.65'
C107	6.00'	9.35'	89°15'52"	5.92'

0 20 50 100

SCALE: 1" = 20'

4576 CURB AND TIE PLANS 1-16.DWG Plotted on 20-Aug-2018 1:03 PM

NATICK/FRAMINGHAM
COCHITUATE RAIL TRAIL

STATE	FED. AID PROJ. NO.	SHEET NO.	TOTAL SHEETS
MA	STP(TE)/TAP/CMQ-003S(206)	70	253
PROJECT FILE NO.	607732		

CURB TIE & GRADING PLAN No. 2

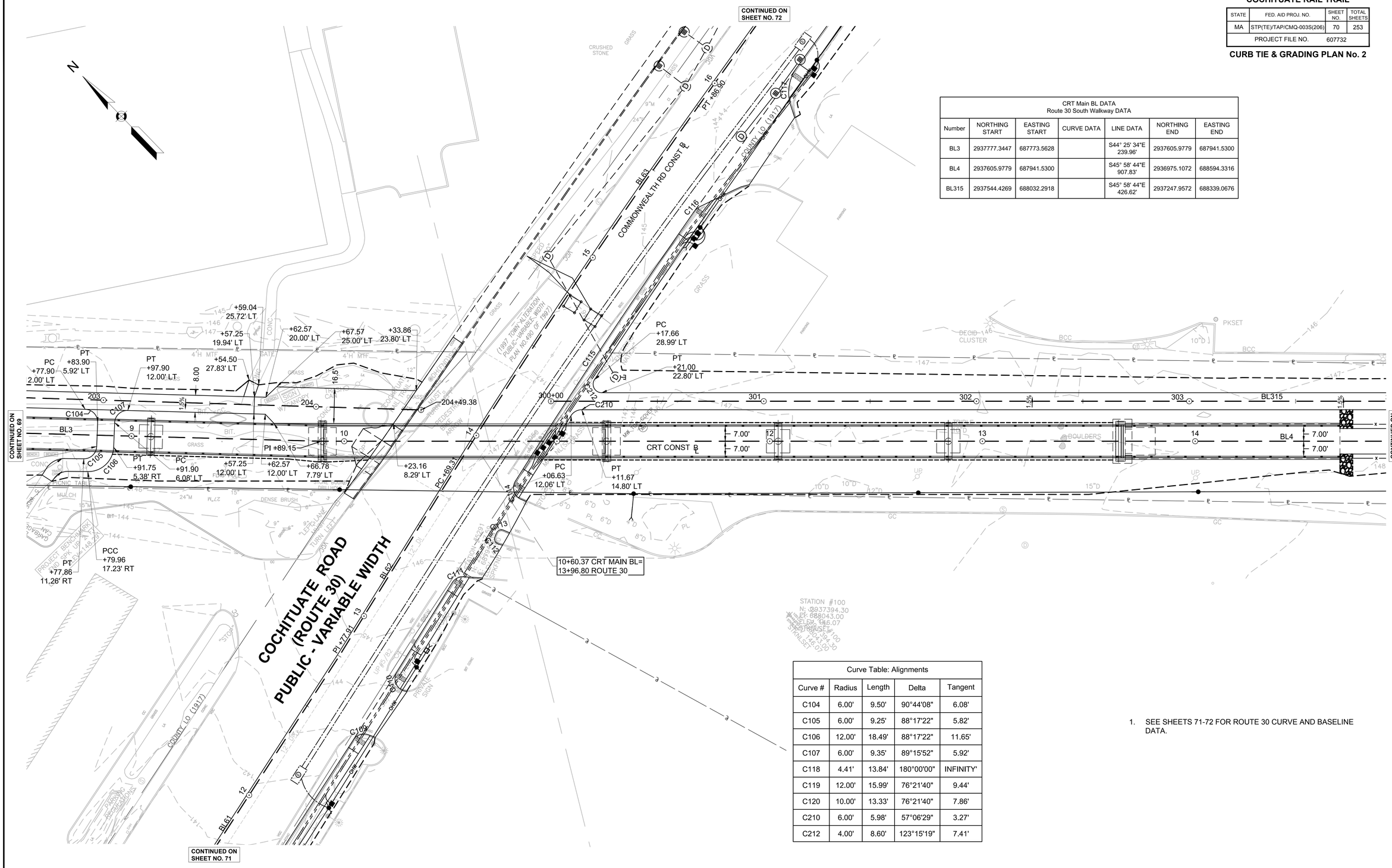

CRT Main BL DATA Route 30 South Walkway DATA						
Number	NORTHING START	EASTING START	CURVE DATA	LINE DATA	NORTHING END	EASTING END
BL3	2937777.3447	687773.5628		S44° 25' 34"E 239.96'	2937605.9779	687941.5300
BL4	2937605.9779	687941.5300		S45° 58' 44"E 907.83'	2936975.1072	688594.3316
BL315	2937544.4269	688032.2918		S45° 58' 44"E 426.62'	2937247.9572	688339.0676

Curve Table: Alignments				
Curve #	Radius	Length	Delta	Tangent
C104	6.00'	9.50'	90°44'08"	6.08'
C105	6.00'	9.25'	88°17'22"	5.82'
C106	12.00'	18.49'	88°17'22"	11.65'
C107	6.00'	9.35'	89°15'52"	5.92'
C118	4.41'	13.84'	180°00'00"	INFINITY'
C119	12.00'	15.99'	76°21'40"	9.44'
C120	10.00'	13.33'	76°21'40"	7.86'
C210	6.00'	5.98'	57°06'29"	3.27'
C212	4.00'	8.60'	123°15'19"	7.41'

1. SEE SHEETS 71-72 FOR ROUTE 30 CURVE AND BASELINE DATA.

4576 CURB AND TIE PLANS 1-16.DWG Plotted on 20-Aug-2018 1:03 PM

Route 30 Baseline Data						
Number	NORTHING START	EASTING START	CURVE DATA	LINE DATA	NORTHING END	EASTING END
BL60	2937459.4257	687608.1179		N74° 02' 36"E 106.77'	2937488.7693	687710.7445
BL61	2937488.7693	687710.7445		N76° 56' 33"E 171.14'	2937527.4346	687877.4583
BL62	2937527.4346	687877.4583		N75° 47' 48"E 91.40'	2937549.8600	687966.0602
BL63	2937549.8600	687966.0602		N78° 54' 54"E 217.59'	2937596.0843	688178.6412

NATICK/FRAMINGHAM
COCHITUATE RAIL TRAIL

STATE	FED. AID PROJ. NO.	SHEET NO.	TOTAL SHEETS
MA	STP(TE)/TAP/CMQ-003S(206)	71	253
PROJECT FILE NO.	607732		

CURB TIE & GRADING PLAN No. 3

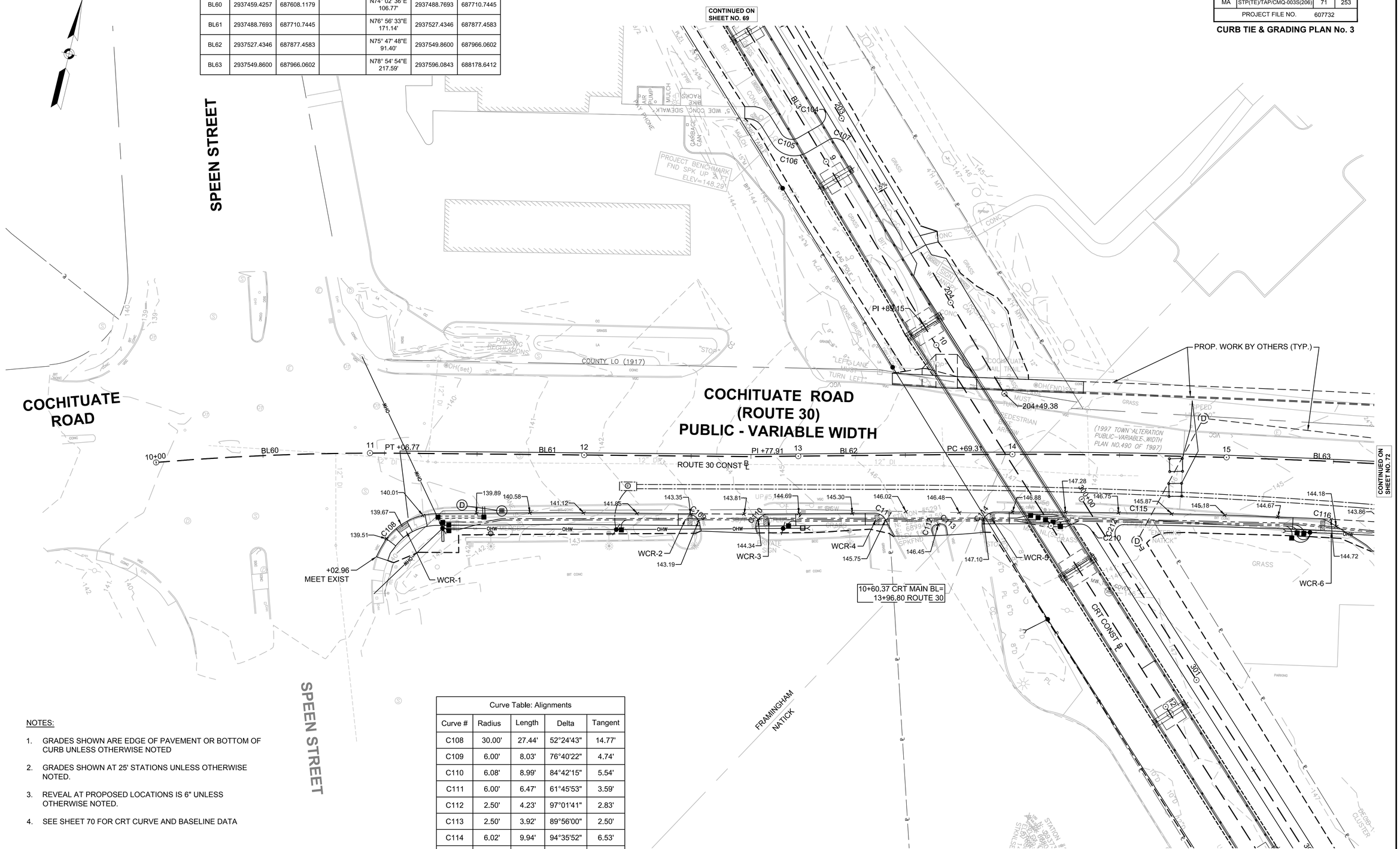

NOTES:

1. GRADES SHOWN ARE EDGE OF PAVEMENT OR BOTTOM OF CURB UNLESS OTHERWISE NOTED
2. GRADES SHOWN AT 25' STATIONS UNLESS OTHERWISE NOTED.
3. REVEAL AT PROPOSED LOCATIONS IS 6" UNLESS OTHERWISE NOTED.
4. SEE SHEET 70 FOR CRT CURVE AND BASELINE DATA

Curve Table: Alignments				
Curve #	Radius	Length	Delta	Tangent
C108	30.00'	27.44'	52°24'43"	14.77'
C109	6.00'	8.03'	76°40'22"	4.74'
C110	6.08'	8.99'	84°42'15"	5.54'
C111	6.00'	6.47'	61°45'53"	3.59'
C112	2.50'	4.23'	97°01'41"	2.83'
C113	2.50'	3.92'	89°56'00"	2.50'
C114	6.02'	9.94'	94°35'52"	6.53'
C115	1608.88'	119.57'	4°15'30"	59.81'
C116	9.94'	5.46'	31°28'25"	2.80'

0 20 50 100
SCALE: 1" = 20'

4576 CURB AND TIE PLANS 1-16.DWG Plotted on 20-Aug-2018 1:04 PM

NATICK/FRAMINGHAM
COCHITUATE RAIL TRAIL

STATE	FED. AID PROJ. NO.	SHEET NO.	TOTAL SHEETS
MA	STP(TE)/TAP/CMQ-003S(206)	72	253
PROJECT FILE NO.	607732		

CURB TIE & GRADING PLAN No. 4

Route 30 Baseline Data						
Number	NORTHING START	EASTING START	CURVE DATA	LINE DATA	NORTHING END	EASTING END
BL62	2937527.4346	687877.4583		N75° 47' 48"E 91.40'	2937549.8600	687966.0602
BL63	2937549.8600	687966.0602		N78° 54' 54"E 217.59'	2937596.0843	688178.6412
BL64	2937596.0843	688178.6412		N79° 40' 06"E 216.18'	2937634.8548	688391.3117

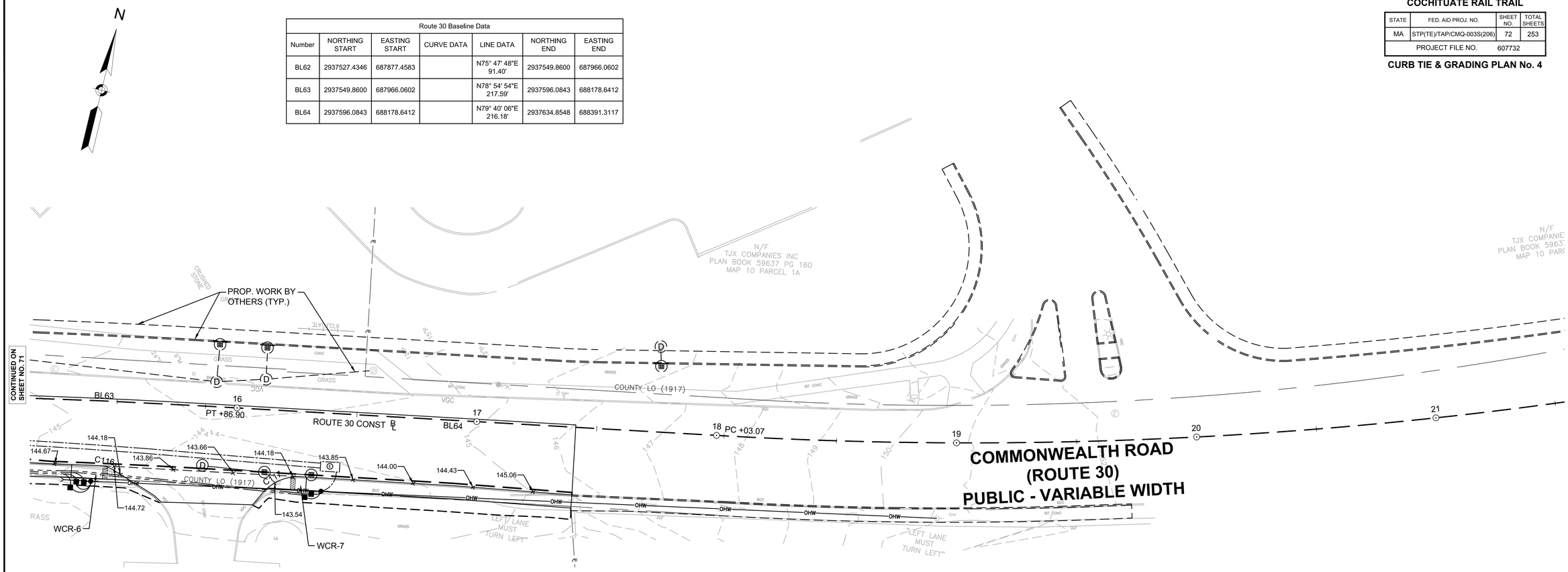

NOTES:

1. GRADES SHOWN ARE EDGE OF PAVEMENT OR BOTTOM OF CURB UNLESS OTHERWISE NOTED
2. GRADES SHOWN AT 25' STATIONS UNLESS OTHERWISE NOTED.
3. REVEAL AT PROPOSED LOCATIONS IS 6" UNLESS OTHERWISE NOTED.

Curve Table: Alignments				
Curve #	Radius	Length	Delta	Tangent
C116	9.94'	5.46'	31°28'25"	2.80'
C117	19.97'	19.20'	55°03'44"	10.41'

0 20 50 100
SCALE: 1" = 20'

4576 CURB AND TIE PLANS 1-16.DWG Plotted on 20-Aug-2018 1:04 PM

NATICK/FRAMINGHAM
COCHITUATE RAIL TRAIL

STATE	FED. AID PROJ. NO.	SHEET NO.	TOTAL SHEETS
MA	STP(TE)/TAP/CMQ-003S(206)	73	253
PROJECT FILE NO.	607732		

CURB TIE & GRADING PLAN No. 5 & 6

CRT Main BL DATA Route 30 South Walkway DATA						
Number	NORTHING START	EASTING START	CURVE DATA	LINE DATA	NORTHING END	EASTING END
BL4	2937605.9779	687941.5300		S45° 58' 44"E 907.83'	2936975.1072	688594.3316
BC1	2936975.1072	688594.3316	R=1500.00' Δ=13°44'35"' T=180.76'		2936758.3495	688880.4202
BL5	2936758.3495	688880.4202		S59° 43' 18"E 212.14'	2936651.3902	689063.6191
BL315	2937544.4269	688032.2918		S45° 58' 44"E 426.62'	2937247.9572	688339.0676
BL316	2937236.6451	688339.2609		S44° 01' 16"W 10.81'	2937228.8729	688331.7497

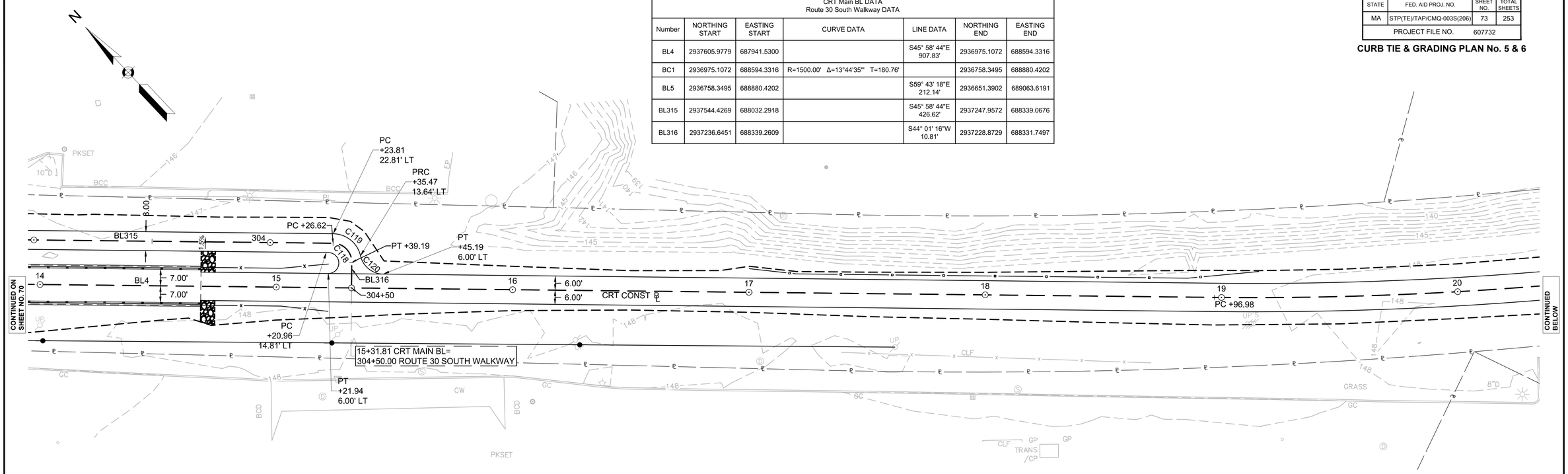

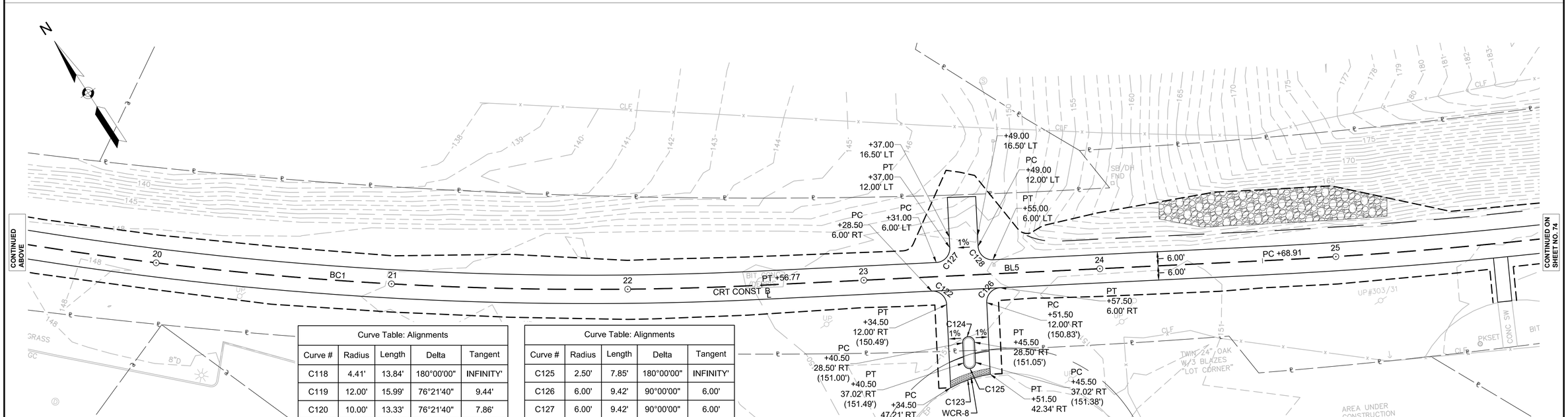

Curve Table: Alignments				
Curve #	Radius	Length	Delta	Tangent
C118	4.41'	13.84'	180°00'00"	INFINITY'
C119	12.00'	15.99'	76°21'40"	9.44'
C120	10.00'	13.33'	76°21'40"	7.86'
C122	6.00'	9.42'	90°00'00"	6.00'
C123	48.96'	17.78'	20°48'45"	8.99'
C124	2.50'	7.85'	180°00'00"	INFINITY'

Curve Table: Alignments				
Curve #	Radius	Length	Delta	Tangent
C125	2.50'	7.85'	180°00'00"	INFINITY'
C126	6.00'	9.42'	90°00'00"	6.00'
C127	6.00'	9.42'	90°00'00"	6.00'
C128	6.00'	9.42'	90°00'00"	6.00'

0 20 50 100
SCALE: 1" = 20'

4576 CURB AND TIE PLANS 1-16.DWG Plotted on 20-Aug-2018 1:04 PM

NATICK/FRAMINGHAM
COCHITUATE RAIL TRAIL

STATE	FED. AID PROJ. NO.	SHEET NO.	TOTAL SHEETS
MA	STP(TE)/TAP/CMQ-003S(206)	74	253
PROJECT FILE NO.	607732		

CURB TIE & GRADING PLAN No. 7

CRT Main BL DATA						
Number	NORTHING START	EASTING START	CURVE DATA	LINE DATA	NORTHING END	EASTING END
BC2	2936651.3902	689063.6191	R=2000.00' Δ=13°22'01"' T=234.36'		2936465.0524	689490.2365

Speen Street Spur DATA						
Number	NORTHING START	EASTING START	CURVE DATA	LINE DATA	NORTHING END	EASTING END
BC47	2936420.7737	689445.1573	R=60.00' Δ=46°28'03"' T=25.76'		2936456.7860	689475.8797

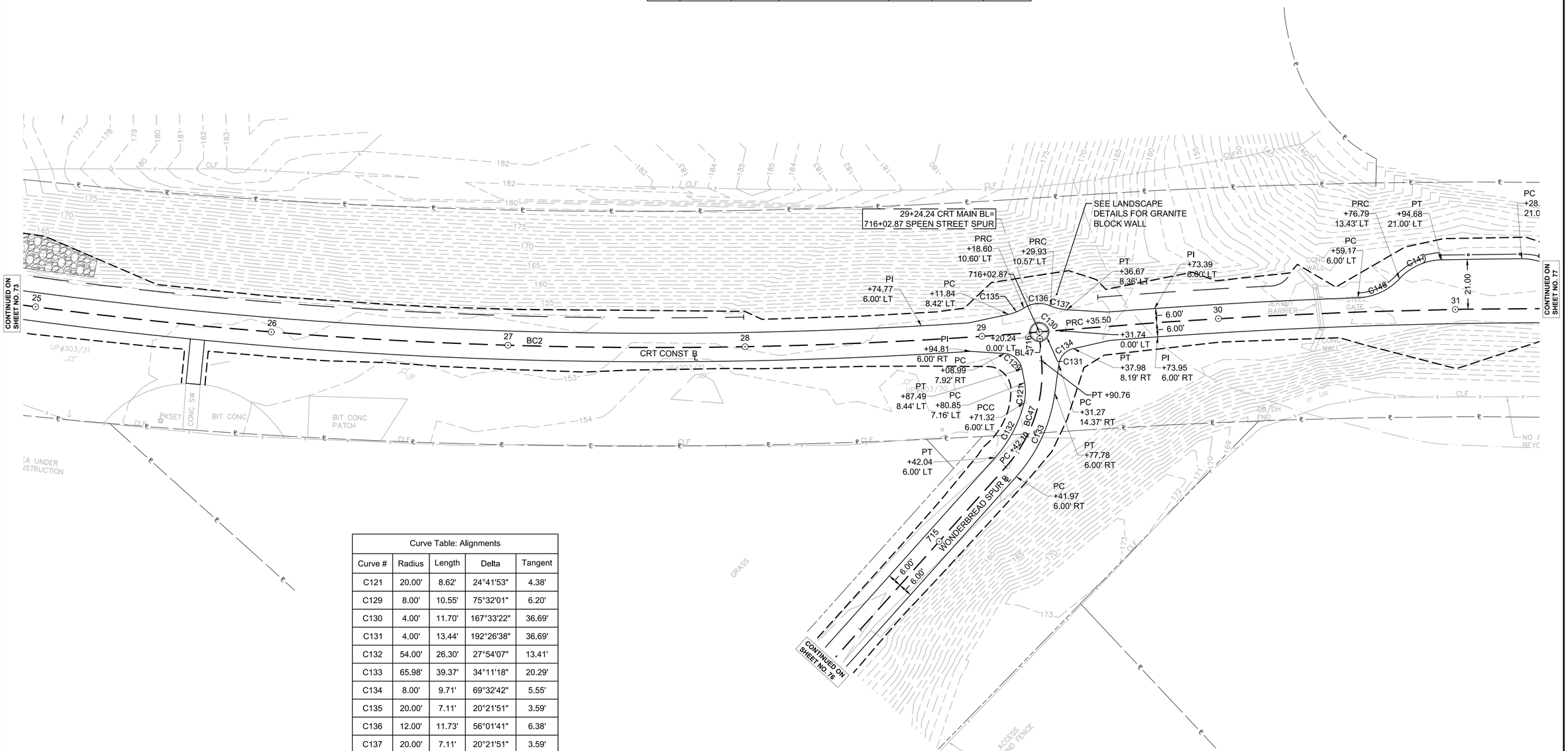

Curve Table: Alignments				
Curve #	Radius	Length	Delta	Tangent
C121	20.00'	8.62'	24°41'53"	4.38'
C129	8.00'	10.55'	75°32'01"	6.20'
C130	4.00'	11.70'	167°33'22"	36.69'
C131	4.00'	13.44'	192°26'38"	36.69'
C132	54.00'	26.30'	27°54'07"	13.41'
C133	65.98'	39.37'	34°11'18"	20.29'
C134	8.00'	9.71'	69°32'42"	5.55'
C135	20.00'	7.11'	20°21'51"	3.59'
C136	12.00'	11.73'	56°01'41"	6.38'
C137	20.00'	7.11'	20°21'51"	3.59'
C146	25.00'	19.70'	45°09'02"	10.39'
C147	25.00'	20.07'	45°59'54"	10.61'

0 20 50 100
SCALE: 1" = 20'

4576 CURB AND TIE PLANS 1-16.DWG Plotted on 20-Aug-2018 1:05 PM

NATICK/FRAMINGHAM
COCHITUATE RAIL TRAIL

STATE	FED. AID PROJ. NO.	SHEET NO.	TOTAL SHEETS
MA	STP(TE)/TAP/CMQ-003S(206)	75	253
PROJECT FILE NO.	607732		

CURB TIE & GRADING PLAN No. 8

Speen Street Spur DATA						
Number	NORTHING START	EASTING START	CURVE DATA	LINE DATA	NORTHING END	EASTING END
BL41	2935843.9856	688062.8374		N72° 29' 37"E 146.20'	2935887.9640	688202.2638
BC41	2935887.9640	688202.2638	R=13.00' Δ=83°59'16" T=11.70'		2935880.7537	688218.0944
BL42	2935880.7537	688218.0944		S23° 31' 07"E 25.99'	2935856.9219	688228.4661
BC43	2935856.9219	688228.4661	R=16.00' Δ=90°00'00" T=16.00'		2935848.6357	688249.5217
BL43	2935848.6357	688249.5217		N66° 28' 53"E 204.65'	2935930.2992	688437.1677

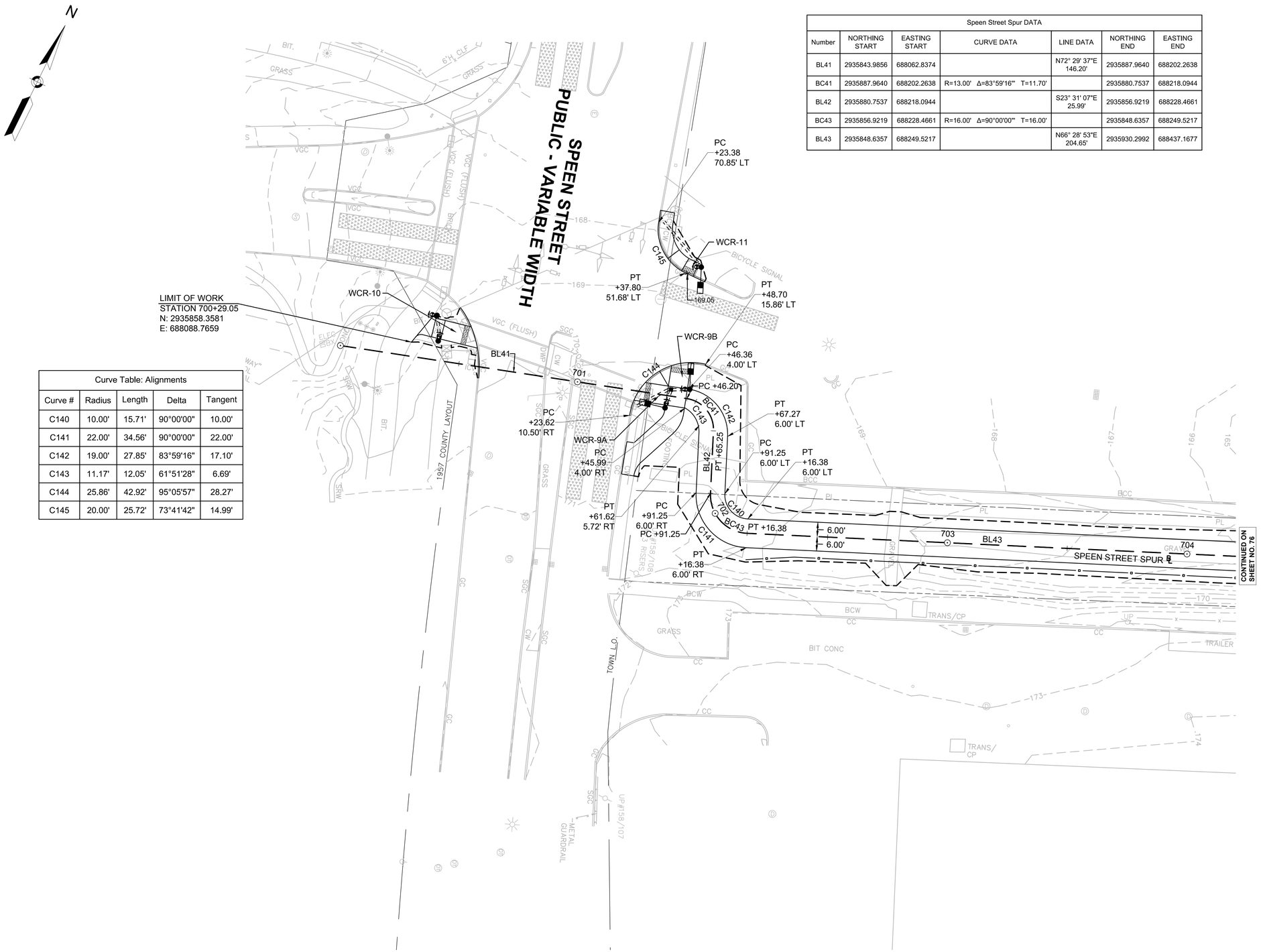

Curve Table: Alignments				
Curve #	Radius	Length	Delta	Tangent
C140	10.00'	15.71'	90°00'00"	10.00'
C141	22.00'	34.56'	90°00'00"	22.00'
C142	19.00'	27.85'	83°59'16"	17.10'
C143	11.17'	12.05'	61°51'28"	6.69'
C144	25.86'	42.92'	95°05'57"	28.27'
C145	20.00'	25.72'	73°41'42"	14.99'

Plotted on 20-Aug-2018 1:05 PM

4576 CURB AND TIE PLANS 1-16.DWG

NATICK/FRAMINGHAM
COCHITUATE RAIL TRAIL

STATE	FED. AID PROJ. NO.	SHEET NO.	TOTAL SHEETS
MA	STP(TE)/TAP/CMQ-003S(206)	76	253
PROJECT FILE NO.	607732		

CURB TIE & GRADING PLAN No. 9 & 10

Plotted on 20-Aug-2018 1:50 PM

4576 CURB AND TIE PLANS 1-16.DWG

CRT Main BL DATA						
Number	NORTHING START	EASTING START	CURVE DATA	LINE DATA	NORTHING END	EASTING END
BC3	2936465.0524	689490.2365	R=2400.00' Δ=29°04'20"' T=622.30'		2935836.5155	690518.0339
BC4	2935836.5155	690518.0339	R=60.00' Δ=19°50'25"' T=10.49'		2935824.3457	690534.7452
BC5	2935824.3457	690534.7452	R=60.00' Δ=40°31'31"' T=22.15'		2935794.2471	690563.4019
BL6	2935794.2471	690563.4019		S23° 19' 54"E 18.33'	2935777.4139	690570.6625

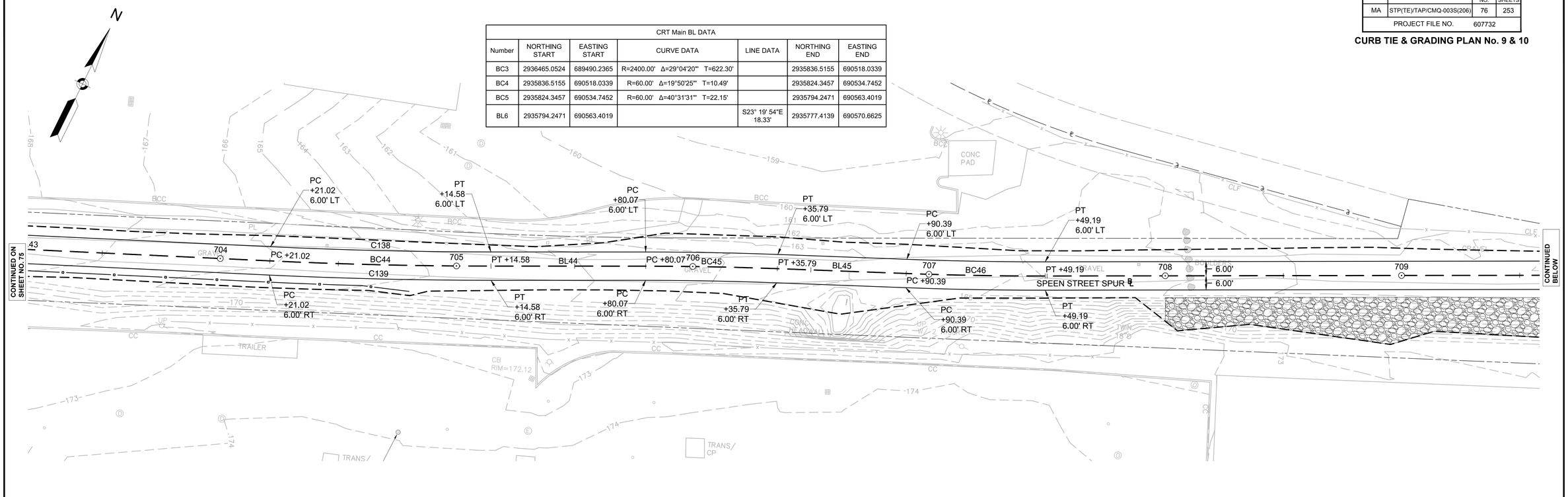

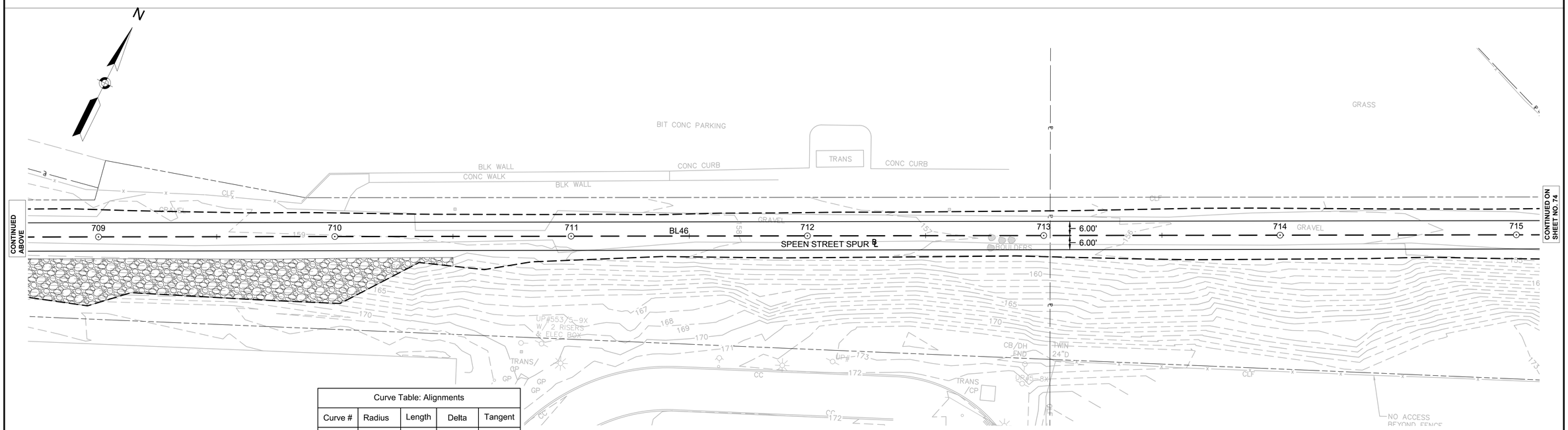

Curve Table: Alignments				
Curve #	Radius	Length	Delta	Tangent
C138	1994.00'	93.27'	2°40'49"	46.65'
C139	2006.00'	93.84'	2°40'49"	46.93'

0 20 50 100

SCALE: 1" = 20'

NATICK/FRAMINGHAM
COCHITUATE RAIL TRAIL

STATE	FED. AID PROJ. NO.	SHEET NO.	TOTAL SHEETS
MA	STP(TE)/TAP/CMQ-003S(206)	77	253
PROJECT FILE NO.	607732		

CURB TIE & GRADING PLAN No. 11 & 12

CRT Main BL DATA						
Number	NORTHING START	EASTING START	CURVE DATA	LINE DATA	NORTHING END	EASTING END
BC3	2936465.0524	689490.2365	R=2400.00' Δ=29°04'20" T=622.30'		2935836.5155	690518.0339
BC4	2935836.5155	690518.0339	R=60.00' Δ=19°50'25" T=10.49'		2935824.3457	690534.7452
BC5	2935824.3457	690534.7452	R=60.00' Δ=40°31'31" T=22.15'		2935794.2471	690563.4019
BL6	2935794.2471	690563.4019		S23° 19' 54"E 18.33'	2935777.4139	690570.6625

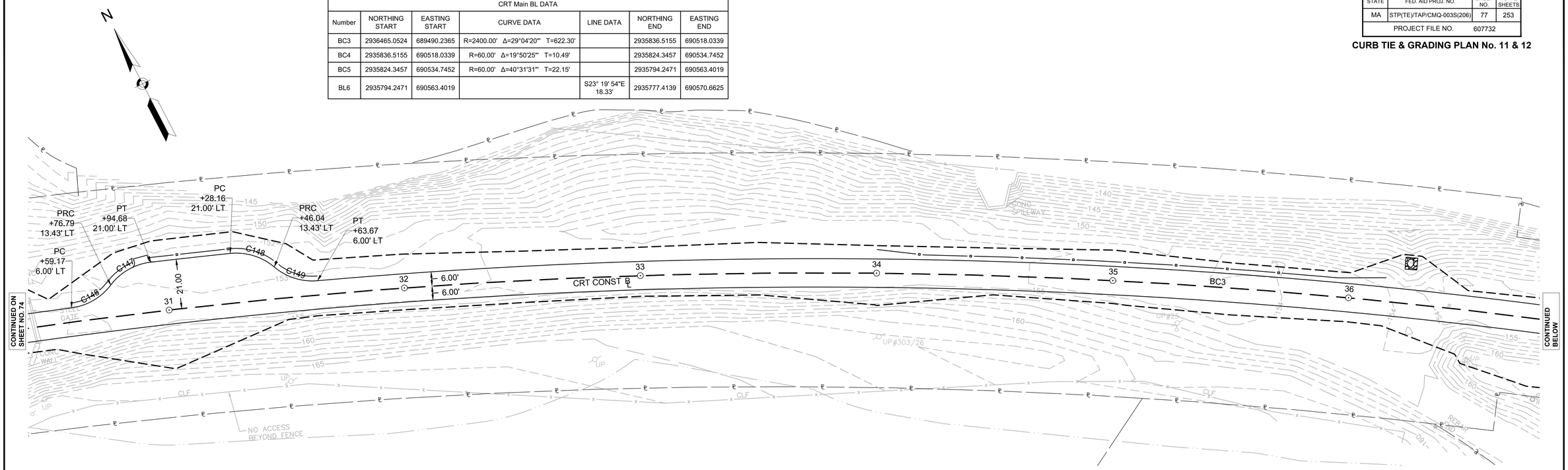

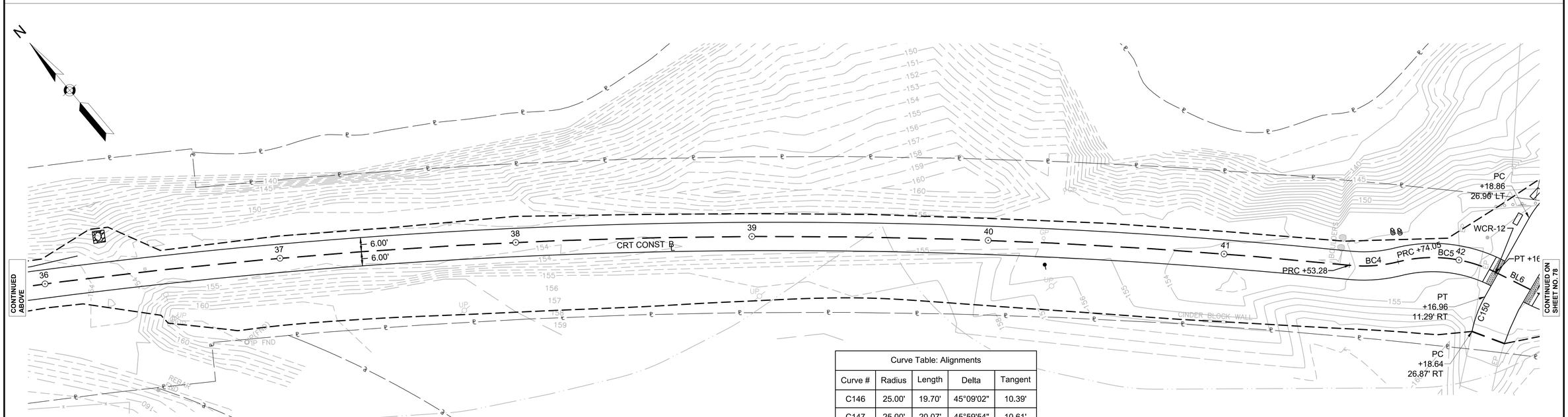

Curve Table: Alignments				
Curve #	Radius	Length	Delta	Tangent
C146	25.00'	19.70'	45°09'02"	10.39'
C147	25.00'	20.07'	45°59'54"	10.61'
C148	25.00'	20.07'	45°59'54"	10.61'
C149	25.00'	19.70'	45°09'02"	10.39'

0 20 50 100
SCALE: 1" = 20'

4576 CURB AND TIE PLANS 1-16.DWG Plotted on 20-Aug-2018 1:51 PM

NATICK/FRAMINGHAM COCHITUATE RAIL TRAIL

STATE	FED. AID PROJ. NO.	SHEET NO.	TOTAL SHEETS
MA	STP(TE)/TAP/CMQ-003S(206)	78	253
PROJECT FILE NO.	607732		

CURB TIE & GRADING PLAN 13 & 14

CRT Main BL DATA						
Number	NORTHING START	EASTING START	CURVE DATA	LINE DATA	NORTHING END	EASTING END
BC4	2935836.5155	690518.0339	R=60.00' Δ=19°50'25" T=10.49'		2935824.3457	690534.7452
BC5	2935824.3457	690534.7452	R=60.00' Δ=40°31'31" T=22.15'		2935794.2471	690563.4019
BL6	2935794.2471	690563.4019		S23° 19' 54"E 18.33'	2935777.4139	690570.6625
BC6	2935777.4139	690570.6625	R=60.00' Δ=34°36'21" T=18.69'		2935750.3288	690593.9056
BC7	2935750.3288	690593.9056	R=60.00' Δ=17°10'02" T=9.06'		2935738.6623	690607.4950
BL7	2935738.6623	690607.4950		S40° 46' 13"E 85.91'	2935673.6007	690663.5957
BC8	2935673.6007	690663.5957	R=2400.00' Δ=14°24'16" T=303.28'		2935172.1763	690996.3379
BL8	2935172.1763	690996.3379		S26° 21' 57"E 458.09'	2934761.7352	691199.7772

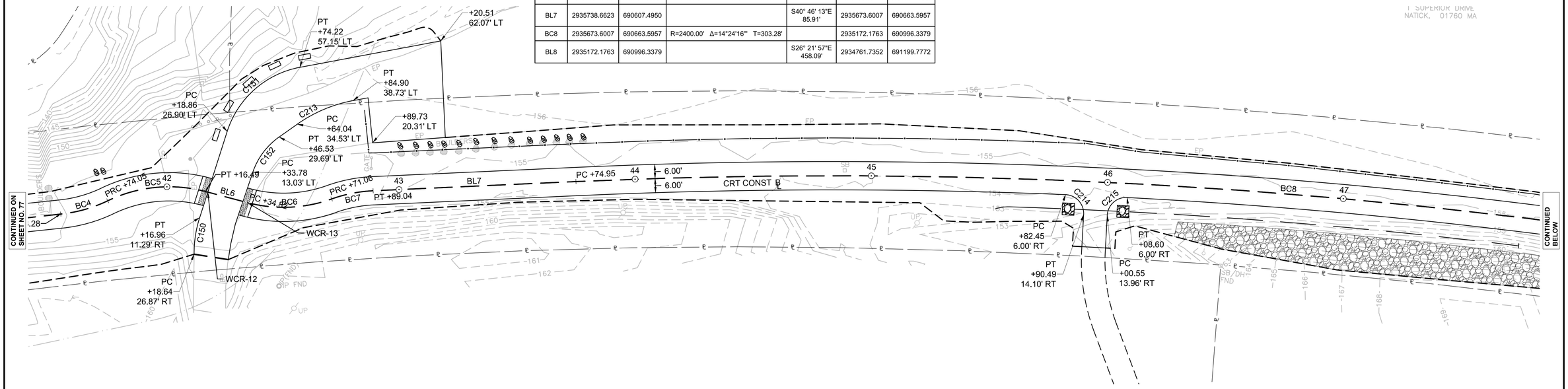

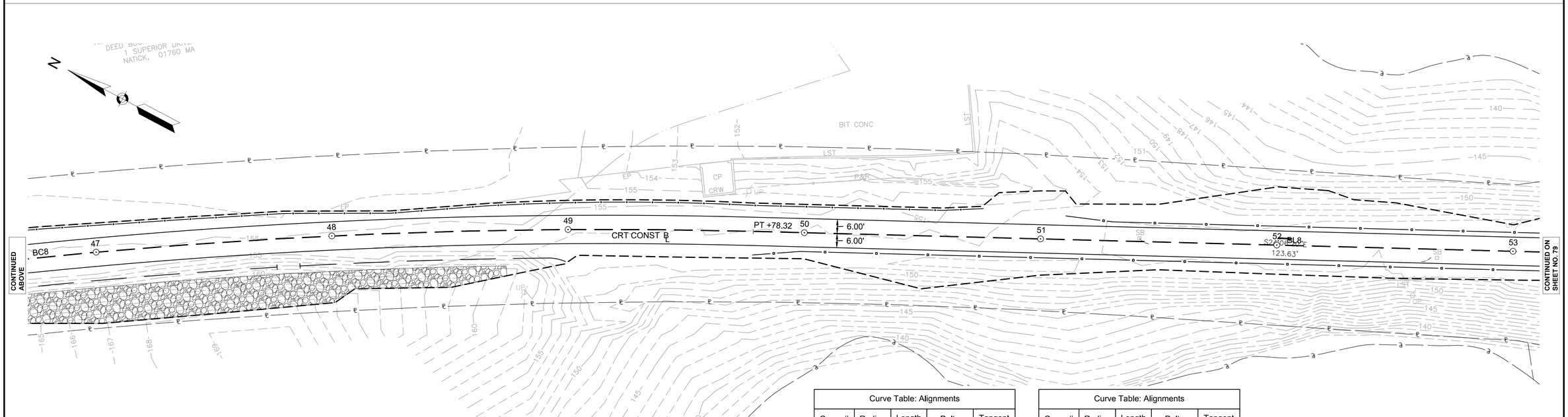

0 20 50 100

SCALE: 1" = 20'

Curve Table: Alignments				
Curve #	Radius	Length	Delta	Tangent
C150	50.00'	15.74'	18°02'27"	7.94'
C151	40.00'	43.05'	61°40'17"	23.88'
C152	30.00'	18.88'	36°03'47"	9.77'

Curve Table: Alignments				
Curve #	Radius	Length	Delta	Tangent
C213	60.00'	25.78'	24°36'53"	13.09'
C214	8.00'	12.68'	90°47'32"	8.11'
C215	8.00'	12.54'	89°50'08"	7.98'

4576 CURB AND TIE PLANS 1-16.DWG Plotted on 20-Aug-2018 1:51 PM

CRT Main BL DATA						
Number	NORTHING START	EASTING START	CURVE DATA	LINE DATA	NORTHING END	EASTING END
BL8	2935172.1763	690996.3379		S26° 21' 57"E 458.09'	2934761.7352	691199.7772
BC9	2934761.7352	691199.7772	R=2250.00' Δ=24°36'10"" T=490.63'		2934013.1625	691798.7920

Route 9 North Walkway DATA						
Number	NORTHING START	EASTING START	CURVE DATA	LINE DATA	NORTHING END	EASTING END
BC51	2934191.2751	691620.4706	R=10.00' Δ=72°00'23"" T=7.27'		2934193.0197	691632.0970
BL307	2934182.8755	691611.9343		N45° 27' 46"E 11.98'	2934191.2751	691620.4706
BL51	2934193.0197	691632.0970		S62° 31' 51"E 228.52'	2934087.6120	691834.8490

MSE WALL ELEVATION TABLE								
	55+50		56+00		56+50		56+75	
	LEFT	RIGHT	LEFT	RIGHT	LEFT	RIGHT	LEFT	RIGHT
BOTTOM OF WALL EL.	148.46	148.82	148.46	148.82	148.46	148.82	-	148.82
TOP OF WALL EL.	156.17	155.99	156.66	156.50	156.26	157.12	-	157.66

NATICK/FRAMINGHAM
COCHITUATE RAIL TRAIL

STATE	FED. AID PROJ. NO.	SHEET NO.	TOTAL SHEETS
MA	STP(TE)/TAP/CMQ-003S(206)	79	253
PROJECT FILE NO.	607732		

CURB TIE & GRADING PLAN 15 & 16

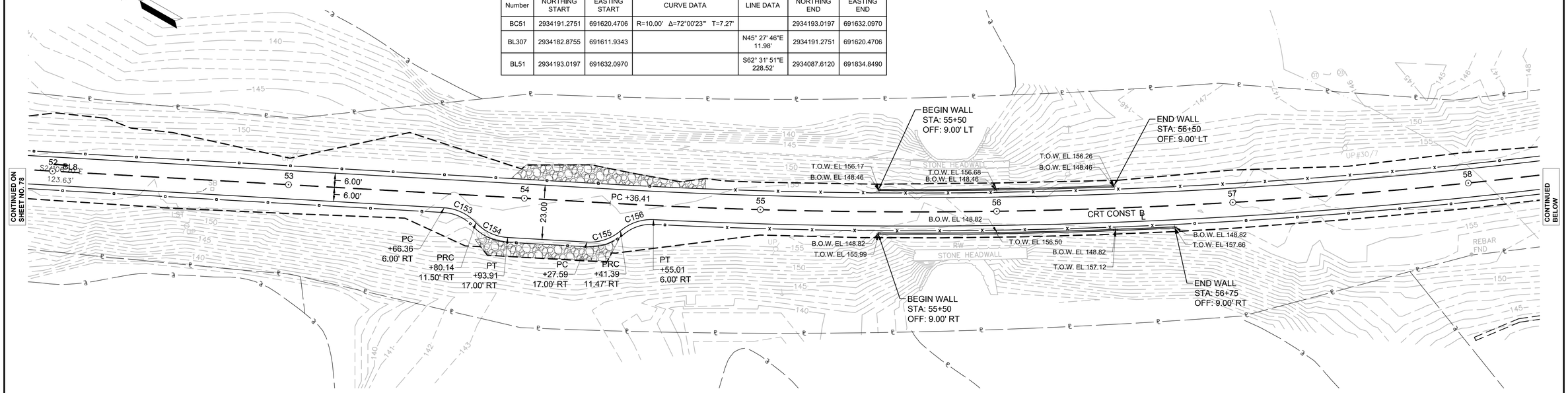

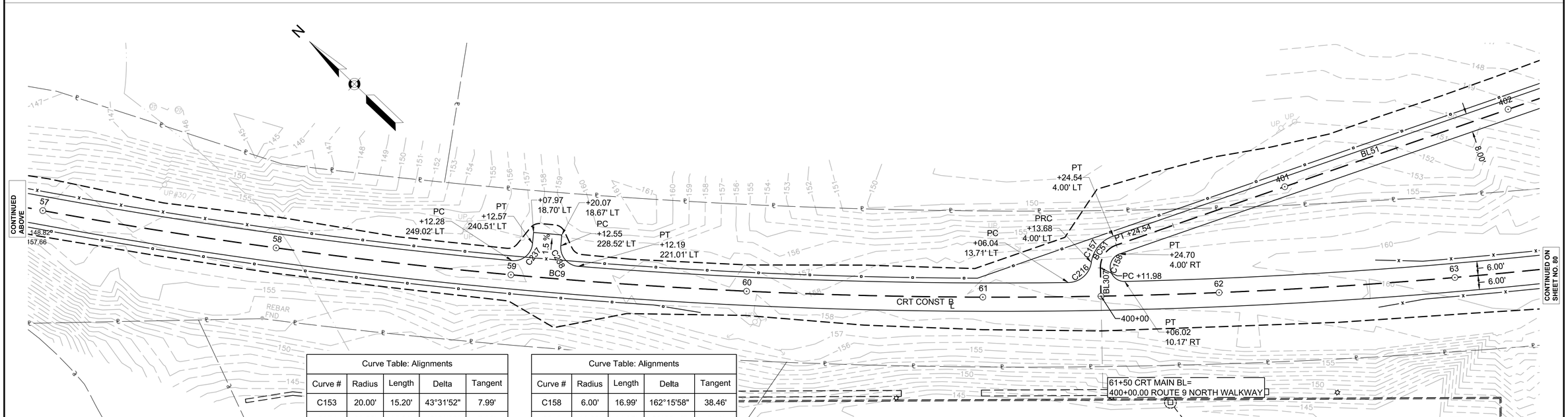

Curve Table: Alignments				
Curve #	Radius	Length	Delta	Tangent
C153	20.00'	15.20'	43°31'52"	7.99'
C154	20.00'	15.20'	43°31'52"	7.99'
C155	20.00'	15.25'	43°41'33"	8.02'
C156	20.00'	15.09'	43°13'08"	7.92'
C157	14.00'	15.21'	62°15'10"	8.45'

Curve Table: Alignments				
Curve #	Radius	Length	Delta	Tangent
C158	6.00'	16.99'	162°15'58"	38.46'
C216	10.00'	14.07'	80°35'48"	8.48'
C237	8.00'	12.59'	90°12'18"	8.03'
C238	8.00'	12.64'	90°30'45"	8.07'

0 20 50 100
SCALE: 1" = 20'

NOTES:

1. GRADES SHOWN AT 25' STATIONS UNLESS OTHERWISE NOTED.

4576 CURB AND TIE PLANS 1-16.DWG Plotted on 20-Aug-2018 1:52 PM

NATICK/FRAMINGHAM
COCHITUATE RAIL TRAIL

STATE	FED. AID PROJ. NO.	SHEET NO.	TOTAL SHEETS
MA	STP(TE)/TAP/CMQ-003S(206)	80	253
PROJECT FILE NO.	607732		

CURB TIE & GRADING PLAN No. 17

Plotted on 20-Aug-2018 1:52 PM

4576 CURB AND TIE PLANS 17-31.DWG

CRT Main BL DATA						
Number	NORTHING START	EASTING START	CURVE DATA	LINE DATA	NORTHING END	EASTING END
BL9	2934013.1625	691798.7920		S50° 58' 06"E 112.89'	2933942.0727	691886.4818
BC10	2933942.0727	691886.4818	R=2000.00' Δ=13°50'23"' T=242.73'		2933685.8961	692294.6770

Route 9 North Walkway DATA						
Number	NORTHING START	EASTING START	CURVE DATA	LINE DATA	NORTHING END	EASTING END
BC52	2934087.6120	691834.8490	R=50.00' Δ=31°11'10"' T=13.95'		2934069.2583	691854.4880
BC53	2934069.2583	691854.4880	R=30.00' Δ=69°21'18"' T=20.76'		2934055.3854	691885.6795
BC54	2934055.3854	691885.6795	R=15.00' Δ=84°55'47"' T=13.73'		2934044.7228	691902.8999
BL52	2934044.7228	691902.8999		S15° 46' 12"E 11.18'	2934033.9658	691905.9377

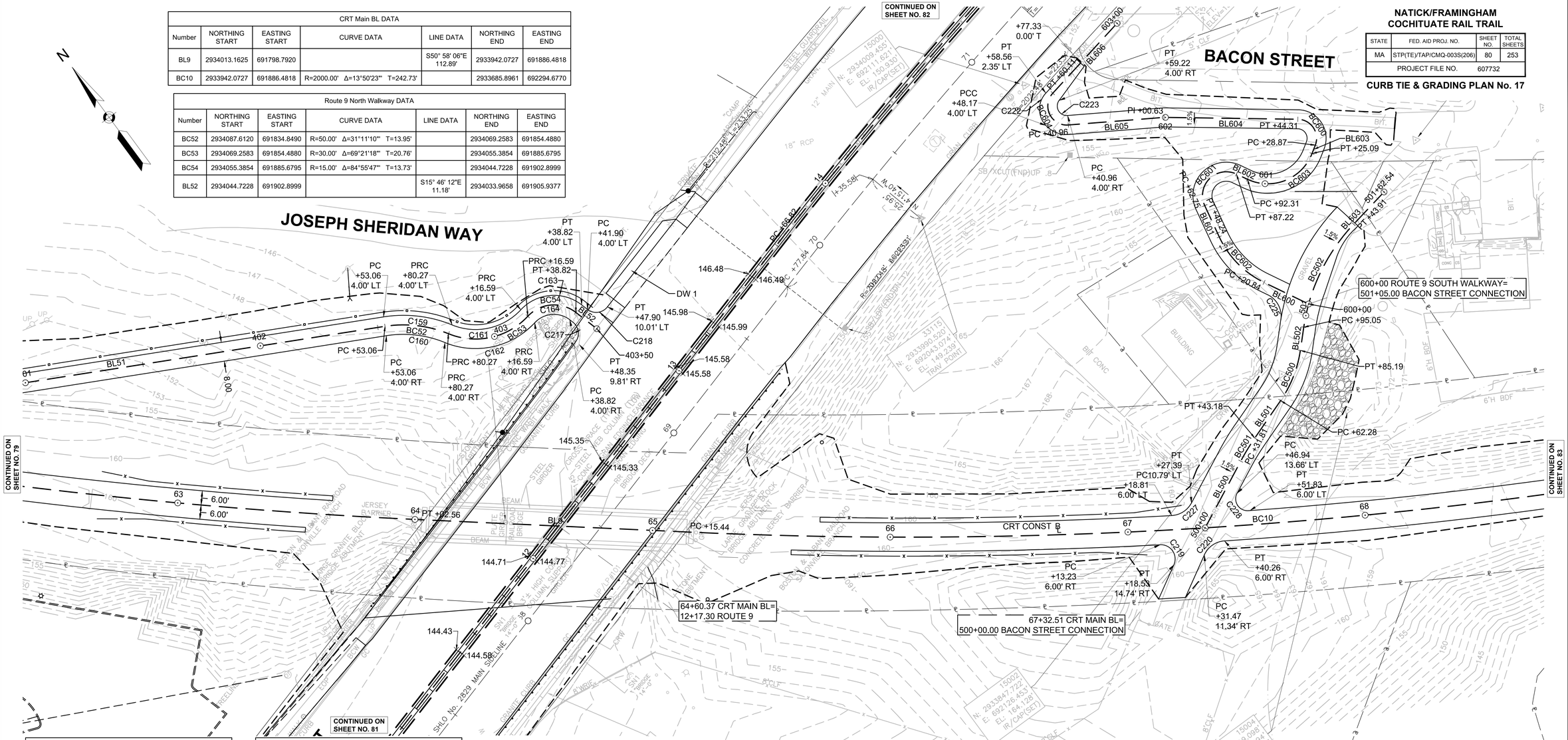

Curve Table: Alignments				
Curve #	Radius	Length	Delta	Tangent
C159	54.00'	29.39'	31°11'10"	15.07'
C160	46.00'	25.04'	31°11'10"	12.84'
C161	26.00'	31.47'	69°21'18"	17.99'
C162	34.00'	41.16'	69°21'18"	23.52'
C163	19.00'	28.16'	84°55'47"	17.39'
C164	11.00'	16.31'	84°55'47"	10.07'
C217	6.00'	9.23'	88°10'24"	5.81'
C218	6.00'	9.43'	90°03'31"	6.01'
C219	6.00'	12.25'	116°58'43"	9.79'

Curve Table: Alignments				
Curve #	Radius	Length	Delta	Tangent
C220	10.00'	10.83'	62°04'28"	6.02'
C222	10.00'	14.92'	85°29'13"	9.24'
C223	4.00'	9.13'	130°45'37"	8.73'
C225	10.00'	12.63'	72°22'41"	7.32'
C227	10.00'	10.25'	58°44'16"	5.63'
C228	5.00'	10.66'	122°11'25"	9.06'

NOTES:

1. GRADES SHOWN ARE EDGE OF PAVEMENT OR BOTTOM OF CURB UNLESS OTHERWISE NOTED
2. GRADES SHOWN AT 25' STATIONS UNLESS OTHERWISE NOTED.
3. REVEAL AT PROPOSED LOCATIONS IS 6" UNLESS OTHERWISE NOTED.

Route 9 South Walkway Baseline Data						
Number	NORTHING START	EASTING START	CURVE DATA	LINE DATA	NORTHING END	EASTING END
BC600	2933916.8196	692194.9174	R=8.00' Δ=110°36'13"' T=11.55'		2933929.9617	692195.4904
BC601	2933923.9861	692142.4337	R=10.00' Δ=140°13'36"' T=27.64'		2933926.7325	692161.0395
BC602	2933883.1715	692143.3439	R=40.00' Δ=39°14'41"' T=14.26'		2933909.7669	692139.5434
BC603	2933922.2529	692163.4498	R=20.00' Δ=93°55'06"' T=21.42'		2933914.8061	692191.7202
BC604	2933985.2805	692116.3696	R=8.00' Δ=137°09'22"' T=20.39'		2933999.9297	692119.0628
BL600	2933864.7288	692153.0490		N27° 45' 17"W 20.84'	2933883.1715	692143.3439
BL601	2933909.7669	692139.5434		N11° 29' 24"E 14.51'	2933923.9861	692142.4337
BL602	2933926.7325	692161.0395		S28° 17' 00"E 5.09'	2933922.2529	692163.4498
BL603	2933914.8061	692191.7202		N57° 47' 53"E 3.78'	2933916.8196	692194.9174
BL604	2933929.9617	692195.4904		N52° 48' 19"W 56.31'	2933964.0031	692150.6338
BL605	2933964.0031	692150.6338		N58° 09' 38"W 40.33'	2933985.2805	692116.3696
BL606	2933999.9297	692119.0628		N78° 59' 45"E 39.89'	2934007.5440	692158.2197

Bacon Street Connection Baseline Data						
Number	NORTHING START	EASTING START	CURVE DATA	LINE DATA	NORTHING END	EASTING END
BC500	2933839.0286	692119.4603	R=50.00' Δ=26°14'52"' T=11.66'		2933851.1090	692138.6858
BC501	2933828.4954	692090.8832	R=100.00' Δ=6°30'46"' T=5.69'		2933832.8019	692101.3963
BC502	2933858.1136	692145.6254	R=80.00' Δ=34°59'35"' T=25.22'		2933880.5267	692188.1885
BL500	2933814.7847	692062.1793		N64° 28' 05"E 31.81'	2933828.4954	692090.8832
BL501	2933832.8019	692101.3963		N70° 58' 51"E 19.11'	2933839.0286	692119.4603
BL502	2933851.1090	692138.6858		N44° 43' 58"E 9.86'	2933858.1136	692145.6254
BL503	2933880.5267	692188.1885		N79° 43' 33"E 18.63'	2933883.8498	692206.5218

0 20 50 100

SCALE: 1" = 20'

NATICK/FRAMINGHAM
COCHITUATE RAIL TRAIL

STATE	FED. AID PROJ. NO.	SHEET NO.	TOTAL SHEETS
MA	STP(TE)/TAP/CMQ-003S(206)	81	253
PROJECT FILE NO.	607732		

CURB TIE & GRADING PLAN No. 18

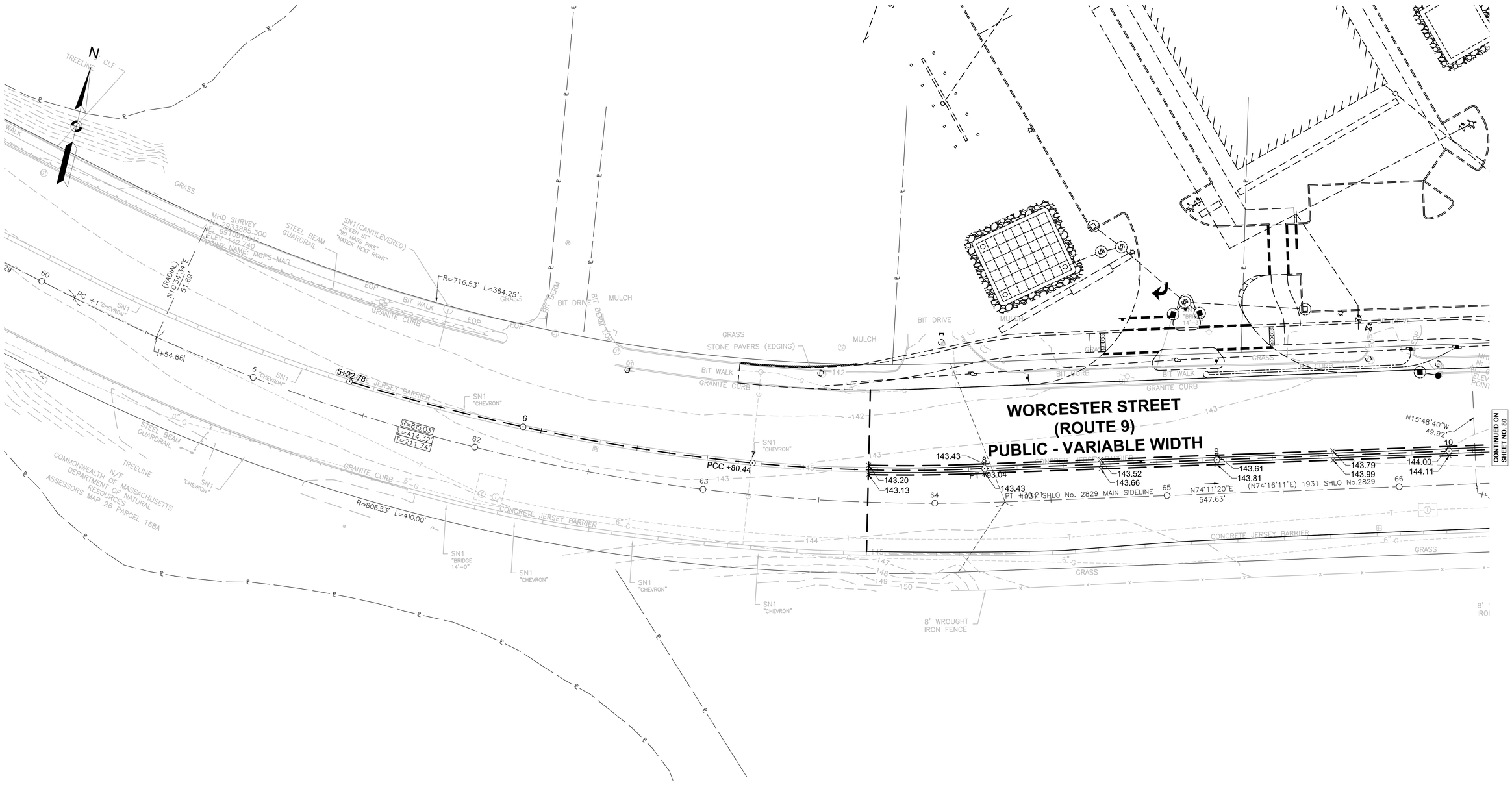

0 20 50 100

SCALE: 1" = 20'

4576 CURB AND TIE PLANS 17-31.DWG Plotted on 20-Aug-2018 1:52 PM

NATICK/FRAMINGHAM
COCHITUATE RAIL TRAIL

STATE	FED. AID PROJ. NO.	SHEET NO.	TOTAL SHEETS
MA	STP(TE)/TAP/CMQ-003S(206)	82	253
PROJECT FILE NO.	607732		

CURB TIE & GRADING PLAN No. 19

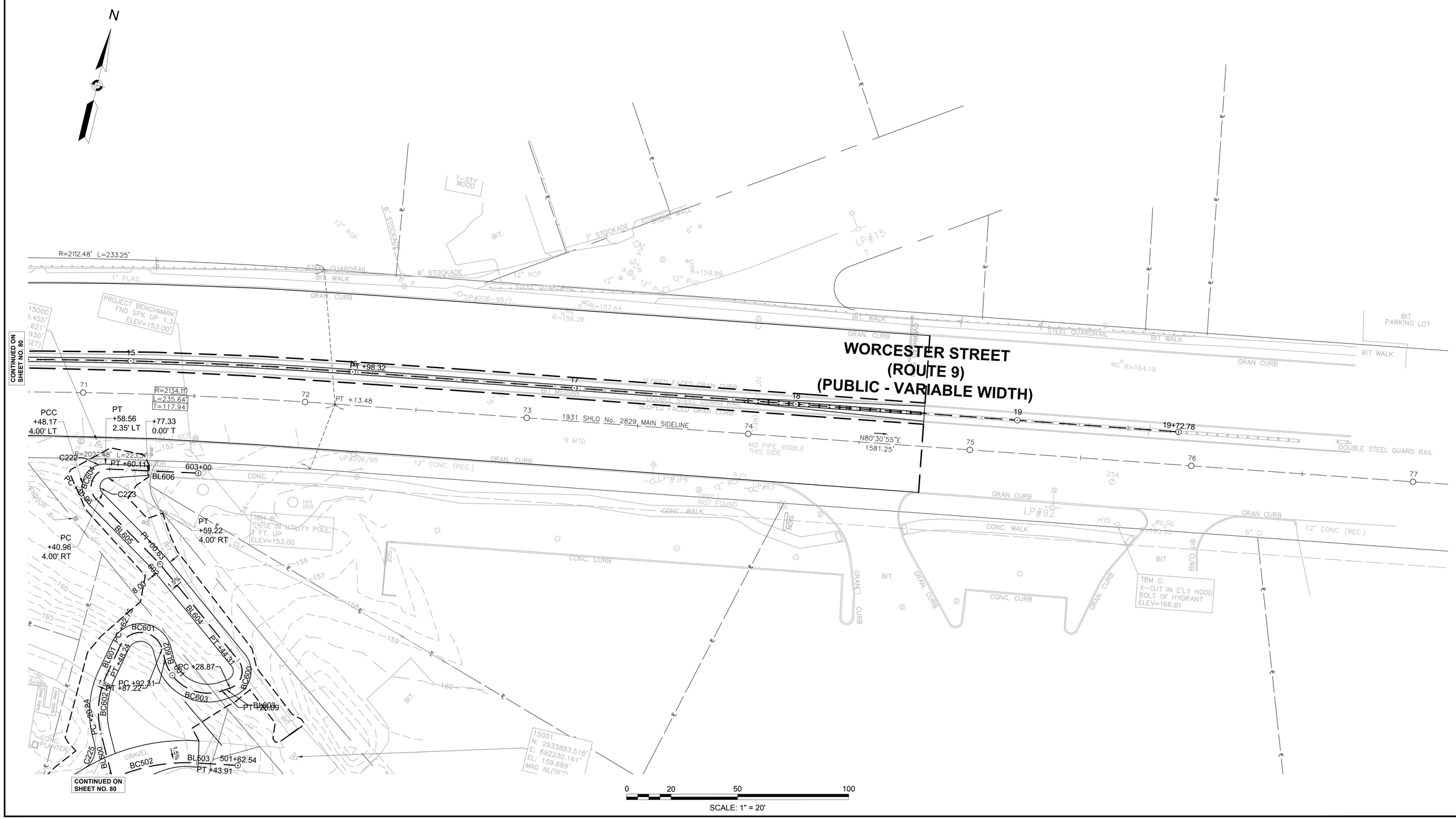

Plotted on 31-Aug-2018 10:12 AM

4576 CURB AND TIE PLANS 17-31.DWG

NATICK/FRAMINGHAM COCHITUATE RAIL TRAIL

STATE	FED. AID PROJ. NO.	SHEET NO.	TOTAL SHEETS
MA	STP(TE)/TAP/CMQ-003S(206)	83	253
PROJECT FILE NO.	607732		

CURB TIE & GRADING PLAN No. 20 & 21

CRT Main BL DATA						
Number	NORTHING START	EASTING START	CURVE DATA	LINE DATA	NORTHING END	EASTING END
BL10	2933685.8961	692294.6770		S64° 48' 29"E 437.38'	2933499.7251	692690.4566
BC11	2933499.7251	692690.4566	R=2800.00' Δ=23°29'58"' T=582.39'		2932814.3612	693601.8961

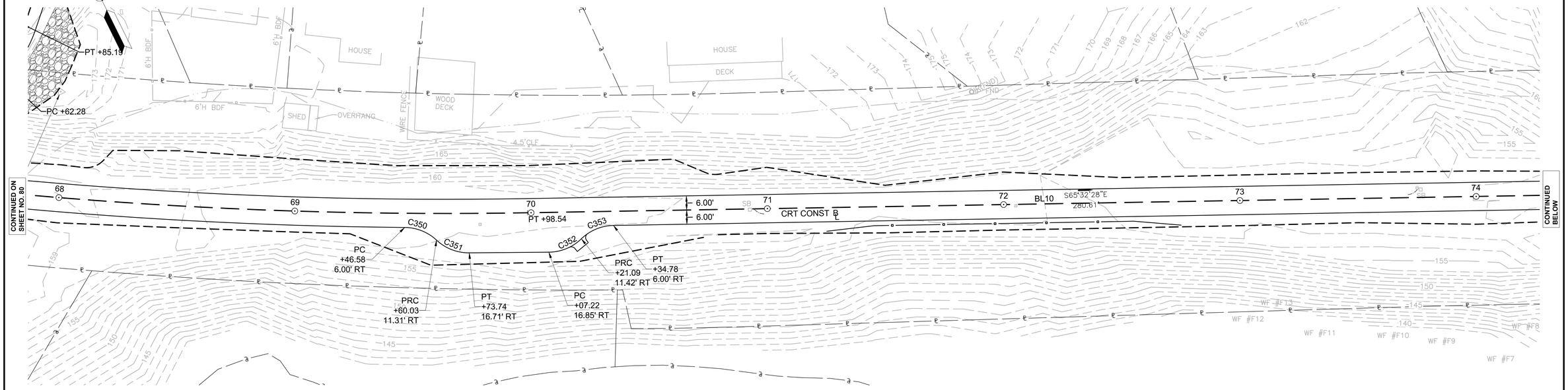

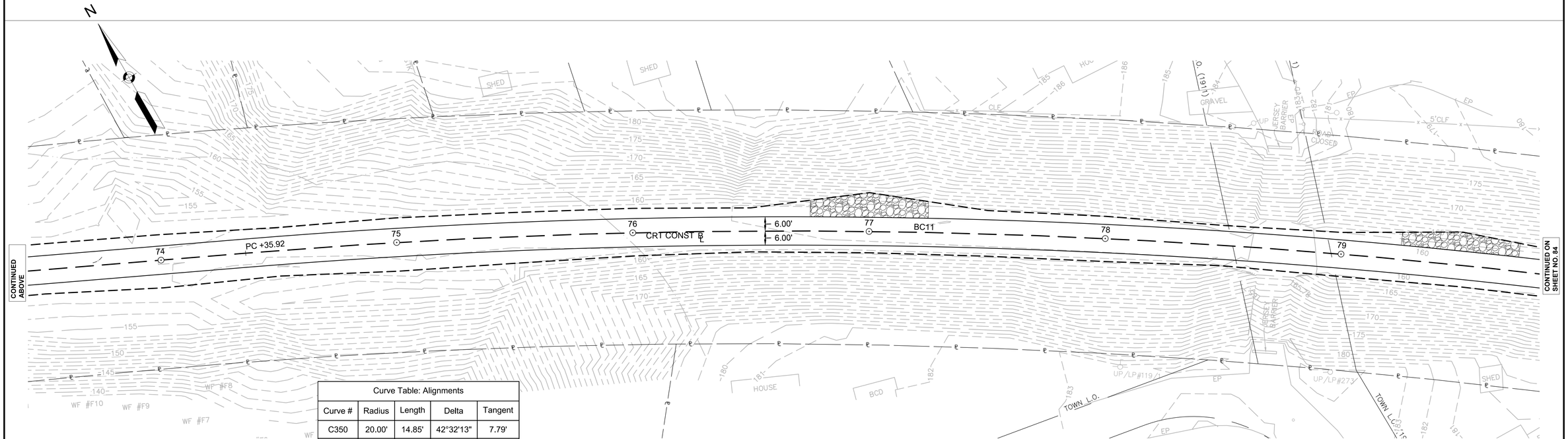

Curve Table: Alignments				
Curve #	Radius	Length	Delta	Tangent
C350	20.00'	14.85'	42°32'13"	7.79'
C351	20.00'	15.19'	43°31'29"	7.98'
C352	20.00'	15.26'	43°43'05"	8.02'
C353	20.00'	15.09'	43°13'02"	7.92'

0 20 50 100

SCALE: 1" = 20'

4576 CURB AND TIE PLANS 17-31.DWG Plotted on 31-Aug-2018 10:12 AM

NATICK/FRAMINGHAM
COCHITUATE RAIL TRAIL

STATE	FED. AID PROJ. NO.	SHEET NO.	TOTAL SHEETS
MA	STP(TE)/TAP/CMQ-003S(206)	84	253
PROJECT FILE NO.	607732		

CURB TIE & GRADING PLAN 22 & 23

CRT Main BL DATA						
Number	NORTHING START	EASTING START	CURVE DATA	LINE DATA	NORTHING END	EASTING END
BC11	2933499.7251	692690.4566	R=2800.00' Δ=23°29'58"' T=582.39'		2932814.3612	693601.8961
BL11	2932814.3612	693601.8961		S41° 18' 31"E 859.22'	2932168.9430	694169.0820

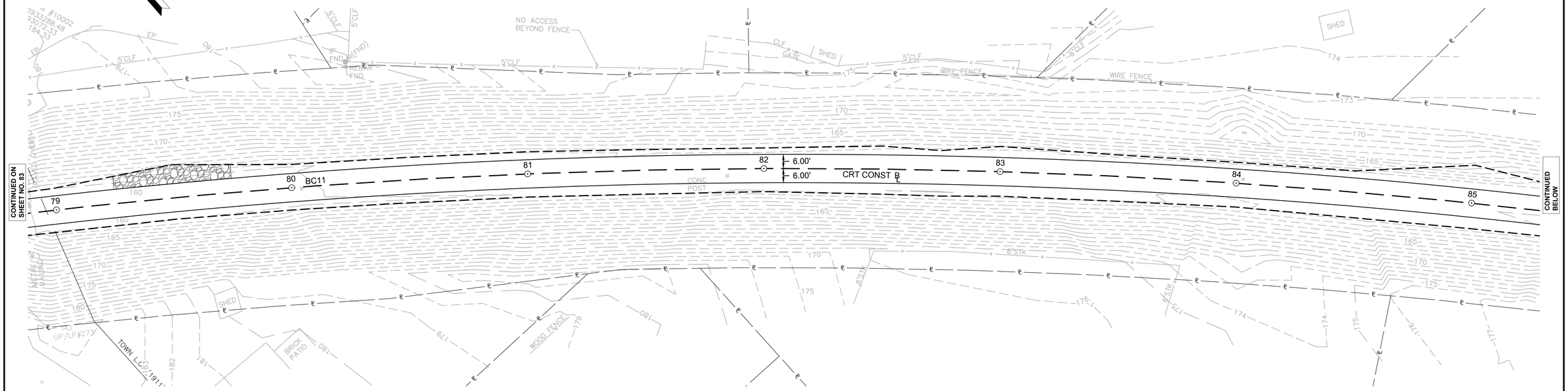

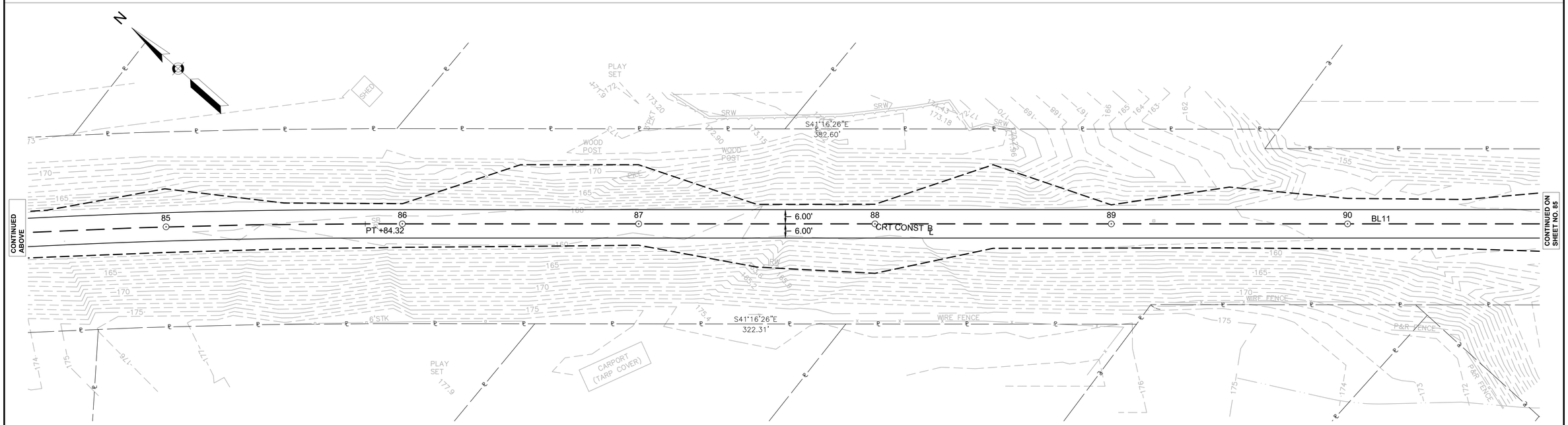

0 20 50 100
SCALE: 1" = 20'

4576 CURB AND TIE PLANS 17-31.DWG Plotted on 20-Aug-2018 1:53 PM

NATICK/FRAMINGHAM
COCHITUATE RAIL TRAIL

STATE	FED. AID PROJ. NO.	SHEET NO.	TOTAL SHEETS
MA	STP(TE)/TAP/CMQ-003S(206)	85	253
PROJECT FILE NO.	607732		

CURB TIE & GRADING PLAN No. 24 & 25

CRT Main BL DATA						
Number	NORTHING START	EASTING START	CURVE DATA	LINE DATA	NORTHING END	EASTING END
BL11	2932814.3612	693601.8961		S41° 18' 31"E 859.22'	2932168.9430	694169.0820
BC12	2932168.9430	694169.0820	R=25.00' Δ=56°18'05"' T=13.38'		2932160.6661	694191.1719
BC13	2932160.6661	694191.1719	R=15.00' Δ=96°20'39"' T=16.76'		2932146.1296	694208.1547
BL12	2932146.1296	694208.1547		S1° 15' 57"E 35.02'	2932111.1209	694208.9282
BC14	2932111.1209	694208.9282	R=12.00' Δ=86°41'37"' T=11.33'		2932099.3936	694220.4980
BC15	2932099.3936	694220.4980	R=25.00' Δ=46°59'07"' T=10.87'		2932090.8024	694238.4830
BL13	2932090.8024	694238.4830		S40° 58' 27"E 1023.01'	2931318.4218	694909.2893

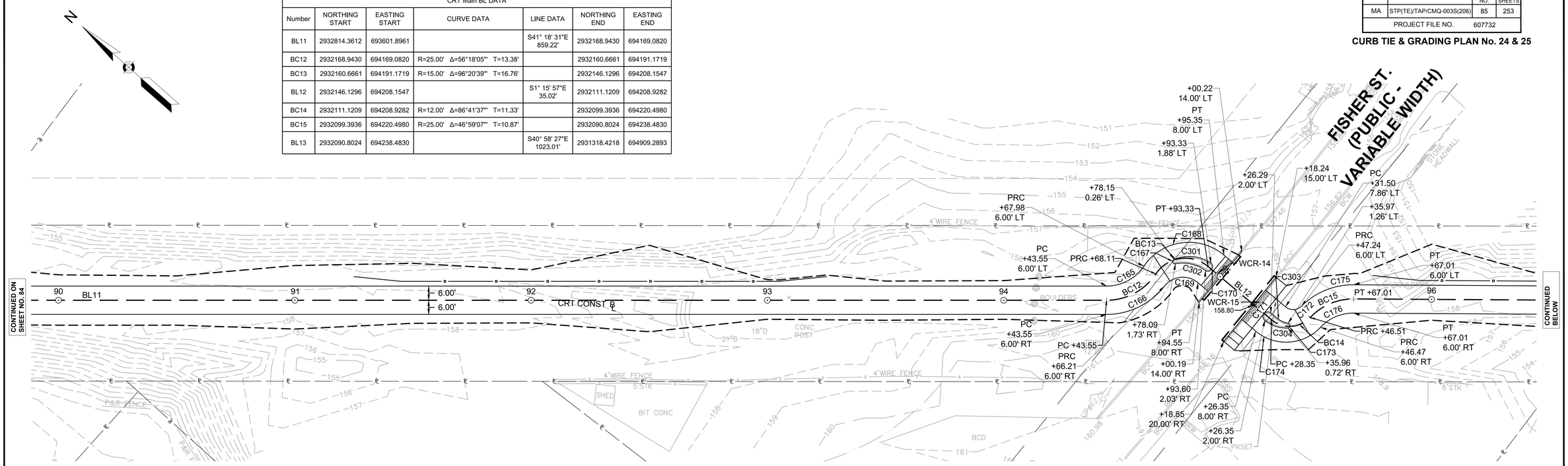

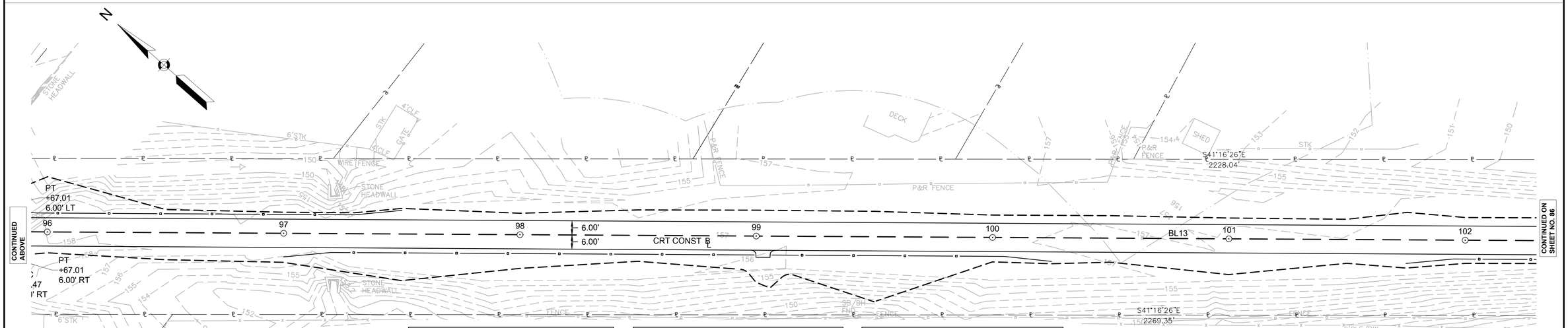

Curve Table: Alignments				
Curve #	Radius	Length	Delta	Tangent
C165	19.00'	18.67'	56°18'05"	10.17'
C166	31.00'	28.10'	51°56'31"	15.10'
C167	1.00'	2.96'	169°46'59"	11.19'
C168	22.80'	38.56'	96°53'57"	25.73'
C169	10.00'	16.05'	91°59'06"	10.35'
C170	1.96'	6.19'	180°57'20"	234.91'

Curve Table: Alignments				
Curve #	Radius	Length	Delta	Tangent
C171	2.00'	6.28'	180°00'00"	INFINITY'
C172	5.00'	7.42'	85°00'21"	4.58'
C173	1.00'	2.89'	165°50'35"	8.05'
C174	20.00'	30.38'	87°01'24"	18.99'
C175	31.00'	24.51'	45°17'51"	12.94'
C176	18.75'	15.59'	47°38'45"	8.28'

Curve Table: Alignments				
Curve #	Radius	Length	Delta	Tangent
C301	17.00'	16.26'	54°48'35"	8.81'
C302	16.00'	13.40'	47°58'13"	7.12'
C303	11.00'	5.52'	28°46'25"	2.82'
C304	14.00'	10.49'	42°55'50"	5.50'

0 20 50 100
SCALE: 1" = 20'

4576 CURB AND TIE PLANS 17-31.DWG Plotted on 20-Aug-2018 1:54 PM

NATICK/FRAMINGHAM
COCHITUATE RAIL TRAIL

STATE	FED. AID PROJ. NO.	SHEET NO.	TOTAL SHEETS
MA	STP(TE)/TAP/CMQ-003S(206)	86	253
PROJECT FILE NO.	607732		

CURB TIE & GRADING PLAN No. 26

Plotted on 20-Aug-2018 1:54 PM

4576 CURB AND TIE PLANS 17-31.DWG

CRT Main BL DATA						
Number	NORTHING START	EASTING START	CURVE DATA	LINE DATA	NORTHING END	EASTING END
BC16	2931318.4218	694909.2893	R=24.00' Δ=28°06'47" T=6.01'		2931311.7400	694918.8426
BL14	2931311.7400	694918.8426		S69° 05' 13"E 16.02'	2931306.0234	694933.8027
BL15	2931306.0234	694933.8027		S67° 52' 31"E 4.91'	2931304.1751	694938.3491
BL16	2931304.1751	694938.3491		S40° 41' 40"E 74.32'	2931247.8290	694986.8050
BL18	2931243.1161	694987.1079		S3° 40' 39"E 5.15'	2931237.9720	694987.4385
BL17	2931247.8290	694986.8050		S3° 40' 39"E 4.72'	2931243.1161	694987.1079
BC17	2931237.9720	694987.4385	R=25.00' Δ=37°40'49" T=8.53'		2931223.0566	694993.6221
BL19	2931223.0566	694993.6221		S41° 21' 28"E 398.70'	2930923.7895	695257.0696
BL13	2932090.8024	694238.4830		S40° 58' 27"E 1023.01'	2931318.4218	694909.2893

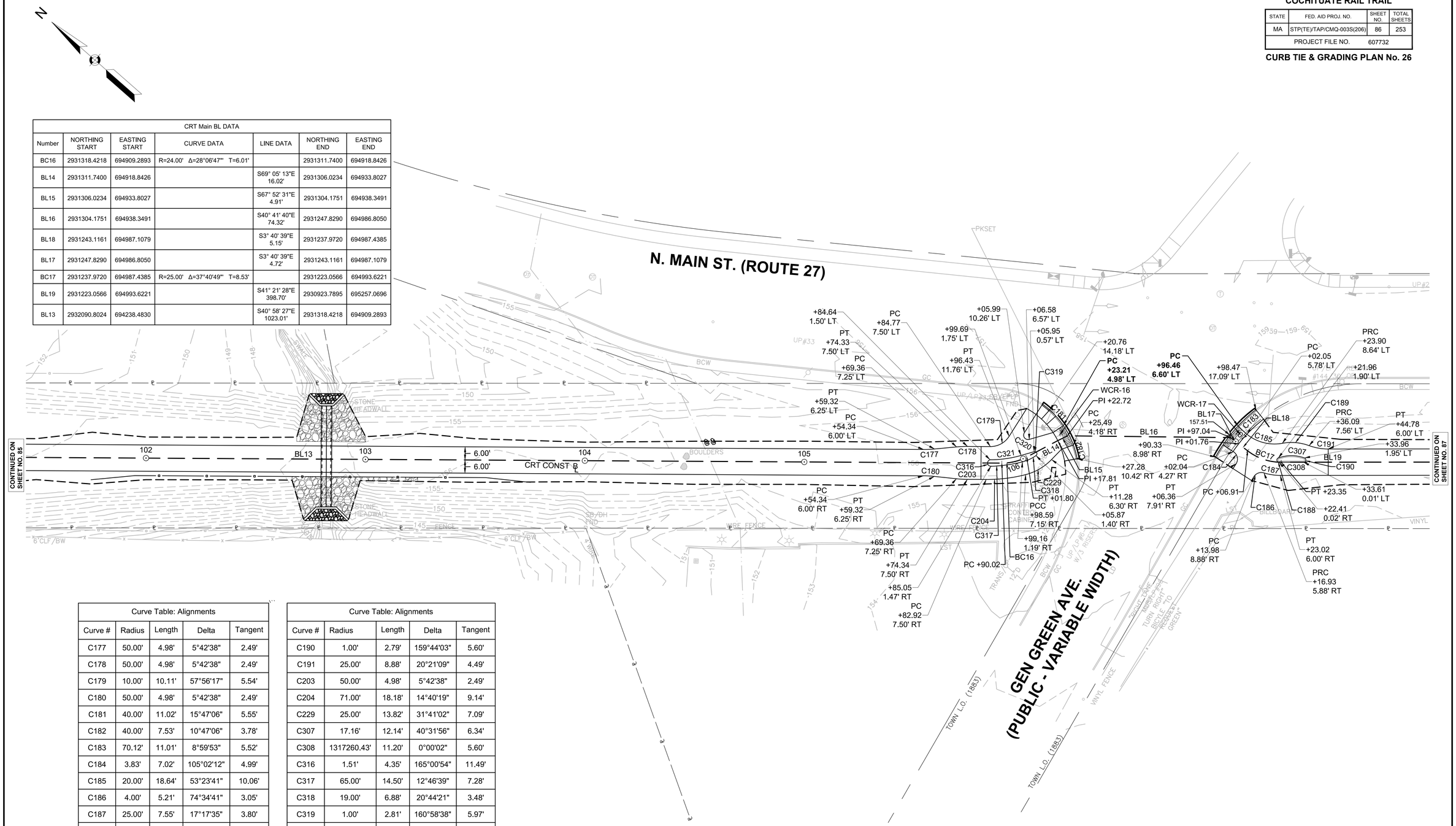

Curve Table: Alignments				
Curve #	Radius	Length	Delta	Tangent
C177	50.00'	4.98'	5°42'38"	2.49'
C178	50.00'	4.98'	5°42'38"	2.49'
C179	10.00'	10.11'	57°56'17"	5.54'
C180	50.00'	4.98'	5°42'38"	2.49'
C181	40.00'	11.02'	15°47'06"	5.55'
C182	40.00'	7.53'	10°47'06"	3.78'
C183	70.12'	11.01'	8°59'53"	5.52'
C184	3.83'	7.02'	105°02'12"	4.99'
C185	20.00'	18.64'	53°23'41"	10.06'
C186	4.00'	5.21'	74°34'41"	3.05'
C187	25.00'	7.55'	17°17'35"	3.80'
C188	1.00'	2.79'	159°44'03"	5.60'
C189	23.16'	12.38'	30°37'25"	6.34'

Curve Table: Alignments				
Curve #	Radius	Length	Delta	Tangent
C190	1.00'	2.79'	159°44'03"	5.60'
C191	25.00'	8.88'	20°21'09"	4.49'
C203	50.00'	4.98'	5°42'38"	2.49'
C204	71.00'	18.18'	14°40'19"	9.14'
C229	25.00'	13.82'	31°41'02"	7.09'
C307	17.16'	12.14'	40°31'56"	6.34'
C308	1317260.43'	11.20'	0°00'02"	5.60'
C316	1.51'	4.35'	165°00'54"	11.49'
C317	65.00'	14.50'	12°46'39"	7.28'
C318	19.00'	6.88'	20°44'21"	3.48'
C319	1.00'	2.81'	160°58'38"	5.97'
C320	2.00'	4.83'	138°27'01"	5.27'
C321	50.00'	14.30'	16°23'18"	7.20'

0 20 50 100

SCALE: 1" = 20'

NATICK/FRAMINGHAM
COCHITUATE RAIL TRAIL

STATE	FED. AID PROJ. NO.	SHEET NO.	TOTAL SHEETS
MA	STP(TE)/TAP/CMQ-003S(206)	87	253
PROJECT FILE NO.	607732		

CURB TIE & GRADING PLAN No. 27

CRT Main BL DATA						
Number	NORTHING START	EASTING START	CURVE DATA	LINE DATA	NORTHING END	EASTING END
BC18	2930923.7895	695257.0696	R=25.00' Δ=72°04'39"' T=18.19'		2930917.3707	695285.7774
BC19	2930917.3707	695285.7774	R=12.00' Δ=54°22'57"' T=6.16'		2930916.6523	695296.7209
BL20	2930916.6523	695296.7209		S59° 30' 40"E 12.32'	2930910.4002	695307.3396
BL21	2930910.4002	695307.3396		S78° 31' 37"E 6.15'	2930909.1776	695313.3636
BL23	2930885.8976	695352.0630		S51° 32' 49"E 7.68'	2930881.1186	695358.0811
BL24	2930881.1186	695358.0811		S58° 20' 46"E 2.77'	2930879.6627	695360.4427
BC20	2930879.6627	695360.4427	R=9.00' Δ=89°17'36"' T=8.89'		2930867.3746	695363.4381
BL25	2930867.3746	695363.4381		S30° 56' 50"W 20.65'	2930849.6669	695352.8204
BC21	2930849.6669	695352.8204	R=25.00' Δ=72°30'31"' T=18.33'		2930820.2251	695355.5553
BL19	2931223.0566	694993.6221		S41° 21' 28"E 398.70'	2930923.7895	695257.0696

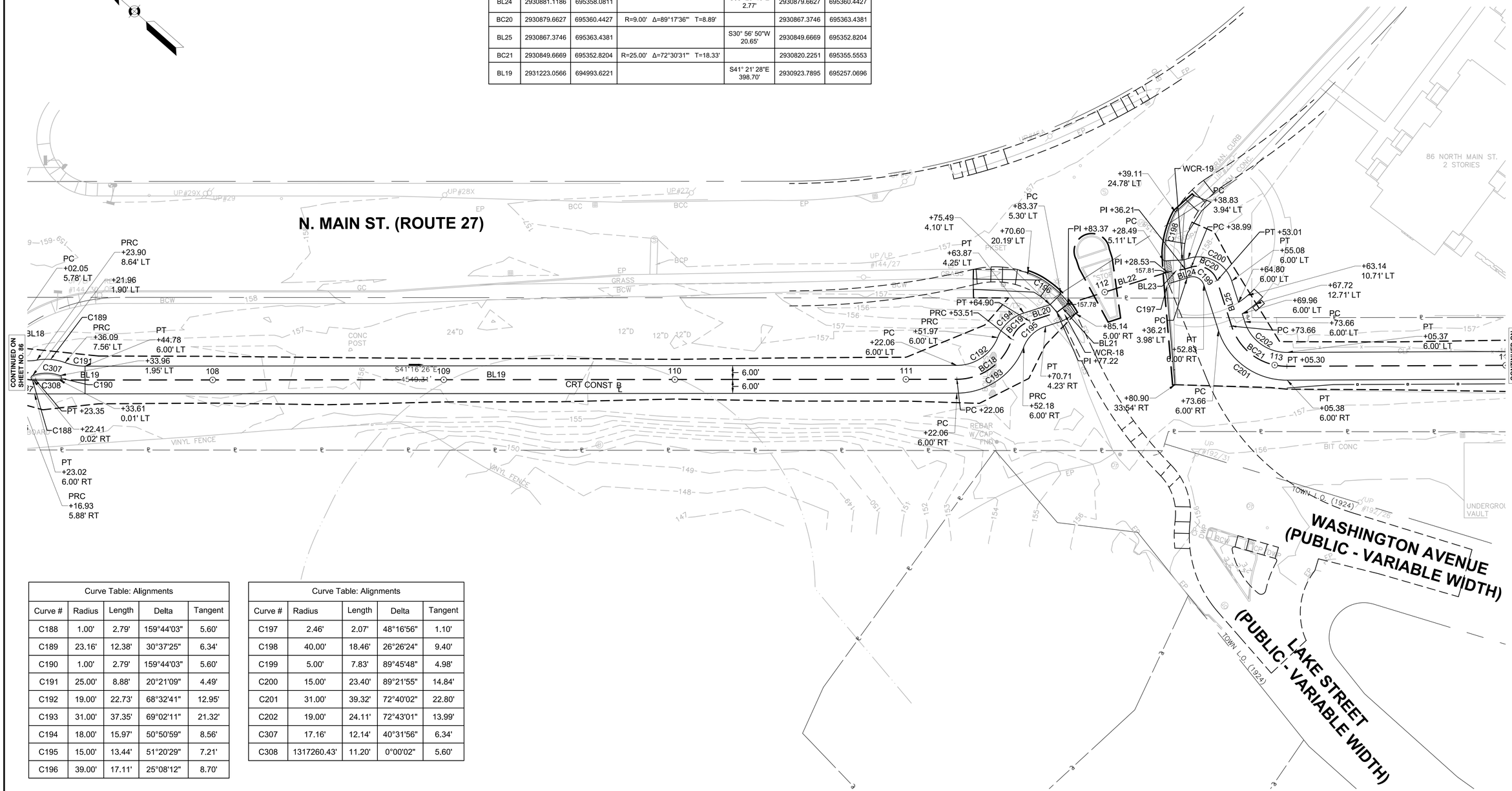

Curve Table: Alignments				
Curve #	Radius	Length	Delta	Tangent
C188	1.00'	2.79'	159°44'03"	5.60'
C189	23.16'	12.38'	30°37'25"	6.34'
C190	1.00'	2.79'	159°44'03"	5.60'
C191	25.00'	8.88'	20°21'09"	4.49'
C192	19.00'	22.73'	68°32'41"	12.95'
C193	31.00'	37.35'	69°02'11"	21.32'
C194	18.00'	15.97'	50°50'59"	8.56'
C195	15.00'	13.44'	51°20'29"	7.21'
C196	39.00'	17.11'	25°08'12"	8.70'

Curve Table: Alignments				
Curve #	Radius	Length	Delta	Tangent
C197	2.46'	2.07'	48°16'56"	1.10'
C198	40.00'	18.46'	26°26'24"	9.40'
C199	5.00'	7.83'	89°45'48"	4.98'
C200	15.00'	23.40'	89°21'55"	14.84'
C201	31.00'	39.32'	72°40'02"	22.80'
C202	19.00'	24.11'	72°43'01"	13.99'
C307	17.16'	12.14'	40°31'56"	6.34'
C308	1317260.43'	11.20'	0°00'02"	5.60'

0 20 50 100
SCALE: 1" = 20'

4576 CURB AND TIE PLANS 17-31.DWG Plotted on 20-Aug-2018 1:55 PM

NATICK/FRAMINGHAM
COCHITUATE RAIL TRAIL

STATE	FED. AID PROJ. NO.	SHEET NO.	TOTAL SHEETS
MA	STP(TE)/TAP/CMQ-003S(206)	88	253
PROJECT FILE NO.	607732		

CURB TIE & GRADING PLAN No. 28 & 29

CRT Main BL DATA						
Number	NORTHING START	EASTING START	CURVE DATA	LINE DATA	NORTHING END	EASTING END
BL13	2932090.8024	694238.4830		S40° 58' 27"E 1023.01'	2931318.4218	694909.2893

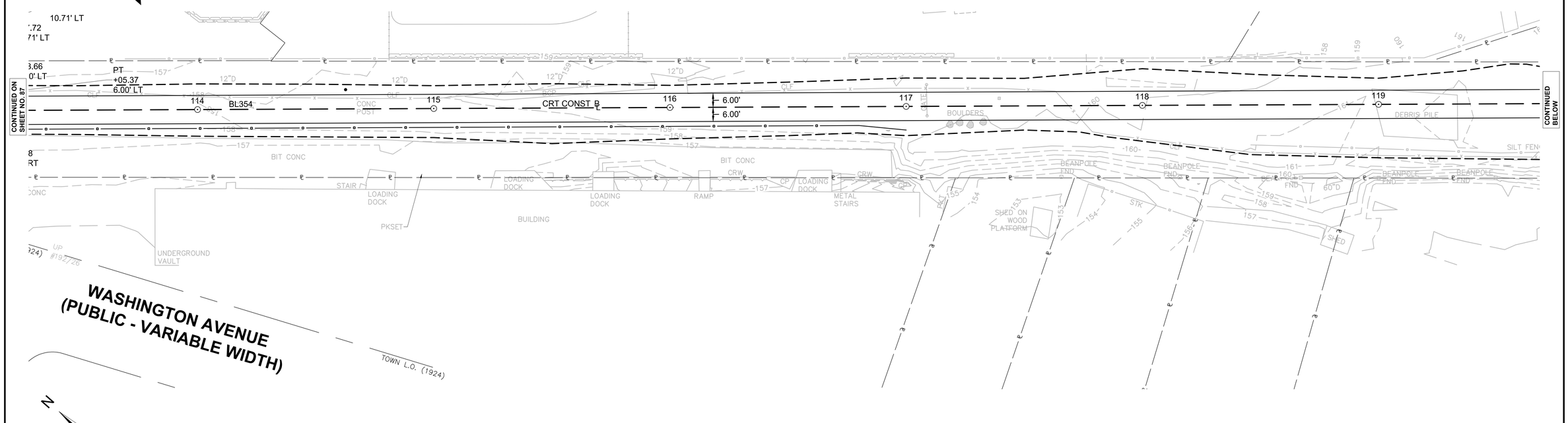

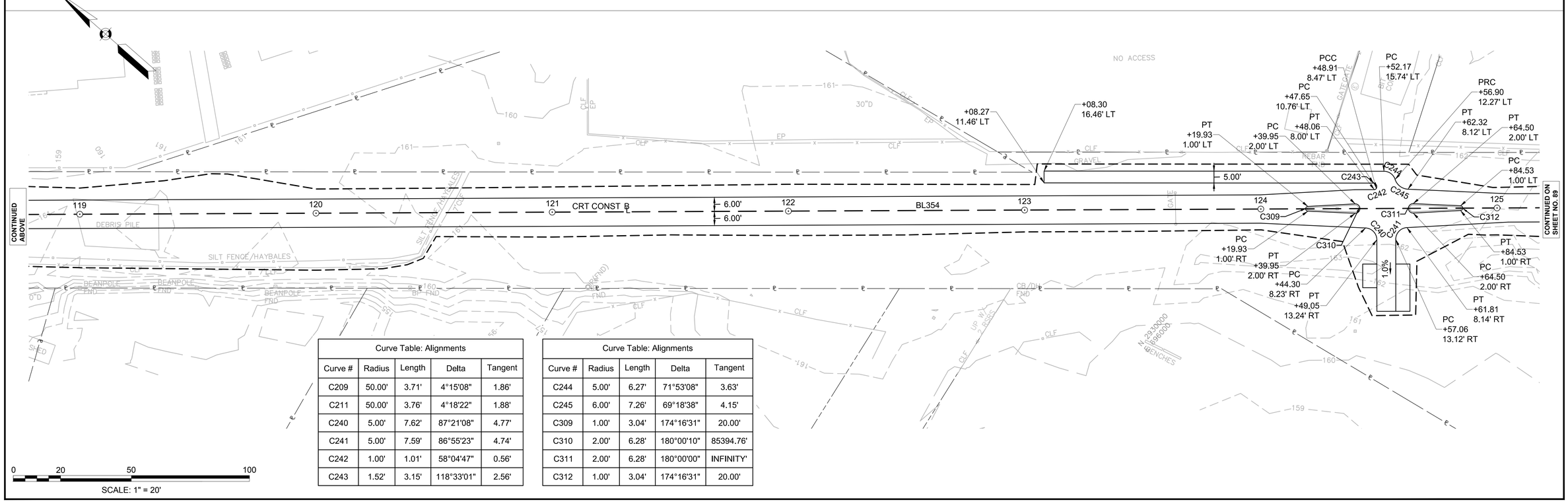

Curve Table: Alignments				
Curve #	Radius	Length	Delta	Tangent
C209	50.00'	3.71'	4°15'08"	1.86'
C211	50.00'	3.76'	4°18'22"	1.88'
C240	5.00'	7.62'	87°21'08"	4.77'
C241	5.00'	7.59'	86°55'23"	4.74'
C242	1.00'	1.01'	58°04'47"	0.56'
C243	1.52'	3.15'	118°33'01"	2.56'

Curve Table: Alignments				
Curve #	Radius	Length	Delta	Tangent
C244	5.00'	6.27'	71°53'08"	3.63'
C245	6.00'	7.26'	69°18'38"	4.15'
C309	1.00'	3.04'	174°16'31"	20.00'
C310	2.00'	6.28'	180°00'10"	85394.76'
C311	2.00'	6.28'	180°00'00"	INFINITY'
C312	1.00'	3.04'	174°16'31"	20.00'

Plotted on 20-Aug-2018 1:55 PM
4576 CURB AND TIE PLANS 17-31.DWG

NATICK/FRAMINGHAM
COCHITUATE RAIL TRAIL

STATE	FED. AID PROJ. NO.	SHEET NO.	TOTAL SHEETS
MA	STP(TE)/TAP/CMQ-003S(206)	89	253
PROJECT FILE NO.	607732		

CURB TIE & GRADING PLAN No. 30 & 31

CRT Main BL DATA						
Number	NORTHING START	EASTING START	CURVE DATA	LINE DATA	NORTHING END	EASTING END
BC22	2929343.2292	696665.1166	R=575.00' Δ=40°03'54" T=209.65'		2929155.8271	697011.6210
BL354	2930820.2251	695355.5553		S41° 33' 41"E 1434.10'	2929747.1651	696306.9715
BC357	2929747.1651	696306.9715	R=200.00' Δ=6°04'01" T=10.60'		2929730.6055	696320.1568
BL350	2929730.6055	696320.1568		S35° 29' 40"E 35.09'	2929702.0351	696340.5317
BL351	2929695.0737	696345.7280		S37° 59' 00"E 147.94'	2929578.4708	696436.7734
BC358	2929578.4708	696436.7734	R=200.00' Δ=10°35'04" T=18.53'		2929551.6095	696462.0645
BL352	2929551.6095	696462.0645		S48° 34' 04"E 99.98'	2929485.4509	696537.0215
BC359	2929485.4509	696537.0215	R=200.00' Δ=7°00'23" T=12.24'		2929468.1878	696554.3235
BL353	2929468.1878	696554.3235		S41° 33' 41"E 167.00'	2929343.2292	696665.1166

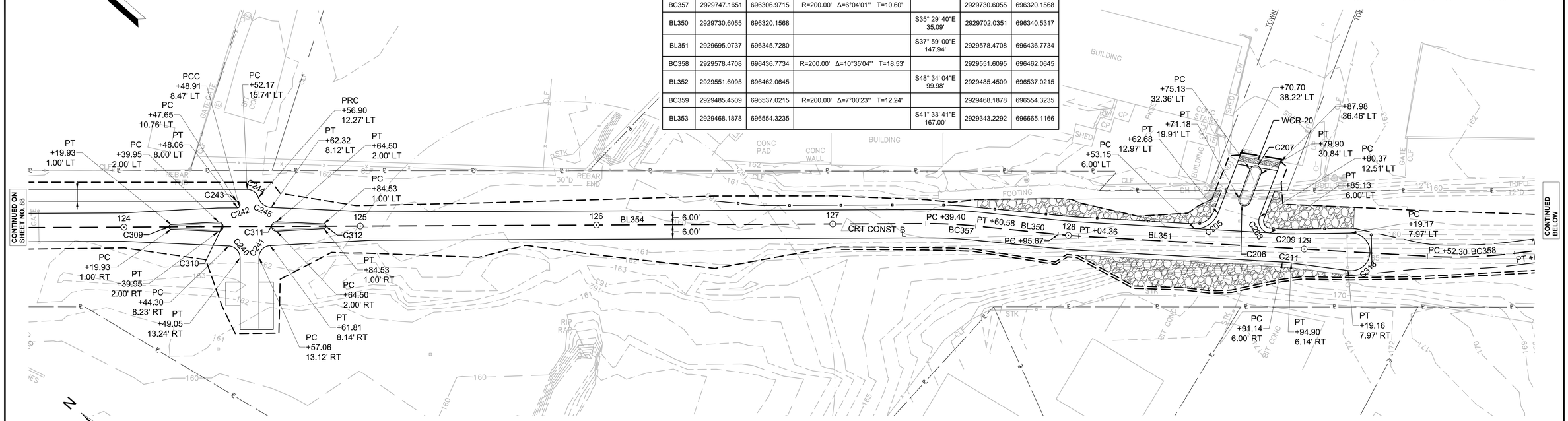

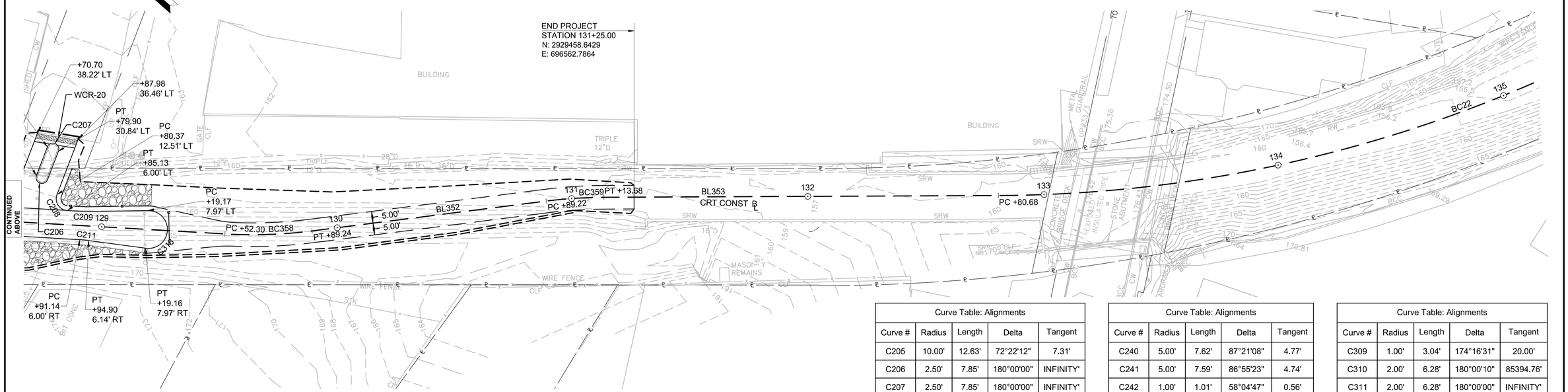

Curve Table: Alignments				
Curve #	Radius	Length	Delta	Tangent
C205	10.00'	12.63'	72°22'12"	7.31'
C206	2.50'	7.85'	180°00'00"	INFINITY'
C207	2.50'	7.85'	180°00'00"	INFINITY'
C208	5.00'	9.39'	107°37'48"	6.84'
C209	50.00'	3.71'	4°15'08"	1.86'
C211	50.00'	3.76'	4°18'22"	1.88'

Curve Table: Alignments				
Curve #	Radius	Length	Delta	Tangent
C240	5.00'	7.62'	87°21'08"	4.77'
C241	5.00'	7.59'	86°55'23"	4.74'
C242	1.00'	1.01'	58°04'47"	0.56'
C243	1.52'	3.15'	118°33'01"	2.56'
C244	5.00'	6.27'	71°53'08"	3.63'
C245	6.00'	7.26'	69°18'38"	4.15'

Curve Table: Alignments				
Curve #	Radius	Length	Delta	Tangent
C309	1.00'	3.04'	174°16'31"	20.00'
C310	2.00'	6.28'	180°00'10"	85394.76'
C311	2.00'	6.28'	180°00'00"	INFINITY'
C312	1.00'	3.04'	174°16'31"	20.00'
C313	8.00'	26.57'	190°19'14"	88.59'

0 20 50 100

SCALE: 1" = 20'

4576 CURB AND TIE PLANS 17-31.DWG Plotted on 20-Aug-2018 1:56 PM

SIGN & PAVEMENT MARKING NOTES

1. ALL EXISTING SIGNS AND SIGN POSTS WITHIN THE PROJECT LIMITS SHALL BE R&D UNLESS OTHERWISE NOTED ON PLANS.
2. ALL PROPOSED PAVEMENT MARKINGS SHALL BE THERMOPLASTIC. ALL EXISTING PAVEMENT MARKINGS THAT CONFLICT WITH THE PROPOSED PAVEMENT MARKINGS SHALL BE REMOVED BY AN APPROVED METHOD.
3. ALL PROPOSED SIGN POSTS SHALL BE P-5 TYPE (TELESCOPIC POST) UNLESS OTHERWISE NOTED ON PLANS.
4. UNLESS OTHERWISE PROVIDED FOR IN THE MUTCD, ALL SIGNS SHOULD BE 90° TO THE CURB/EDGE OF PAVEMENT AND FACING THE FLOW OF TRAFFIC.
5. STREET SIGNS SHALL BE MOUNTED PARALLEL WITH THE STREET.
6. ALL R&R SIGNS SHALL BE MOUNTED ON NEW POSTS.
7. ALL SIGNS ALONG THE ROADWAY SHALL BE SET BACK 6" FROM THE EDGE OF THE SIGN PANEL TO THE CURB LINE. NO SIGN SHALL OVERHANG THE CURB LINE.
8. ALL SIGNS ALONG THE ROADWAY SHALL BE MOUNTED TO PROVIDE A 7' MINIMUM CLEARANCE BETWEEN THE BOTTOM OF THE SIGN AND FINISHED GRADE.
9. ALL SIGNS ALONG THE SHARED USE PATH SHALL BE SET BACK 2' FROM THE EDGE OF THE SIGN PANEL TO THE EDGE OF THE SHARED USE PATH. NO SIGN SHALL OVERHANG THE SHARED USE PATH.
10. ALL SIGNS ALONG THE SHARED USE PATH SHALL BE MOUNTED TO PROVIDE A 4' MINIMUM CLEARANCE BETWEEN THE BOTTOM OF THE SIGN AND FINISHED GRADE.

NATICK/FRAMINGHAM
COCHITUATE RAIL TRAIL

STATE	FED. AID PROJ. NO.	SHEET NO.	TOTAL SHEETS
MA	STP(TE)/TAP/CMQ-003S(206)	90	253
PROJECT FILE NO.	607732		

SIGN & PAVEMENT MARKING PLAN No. 1

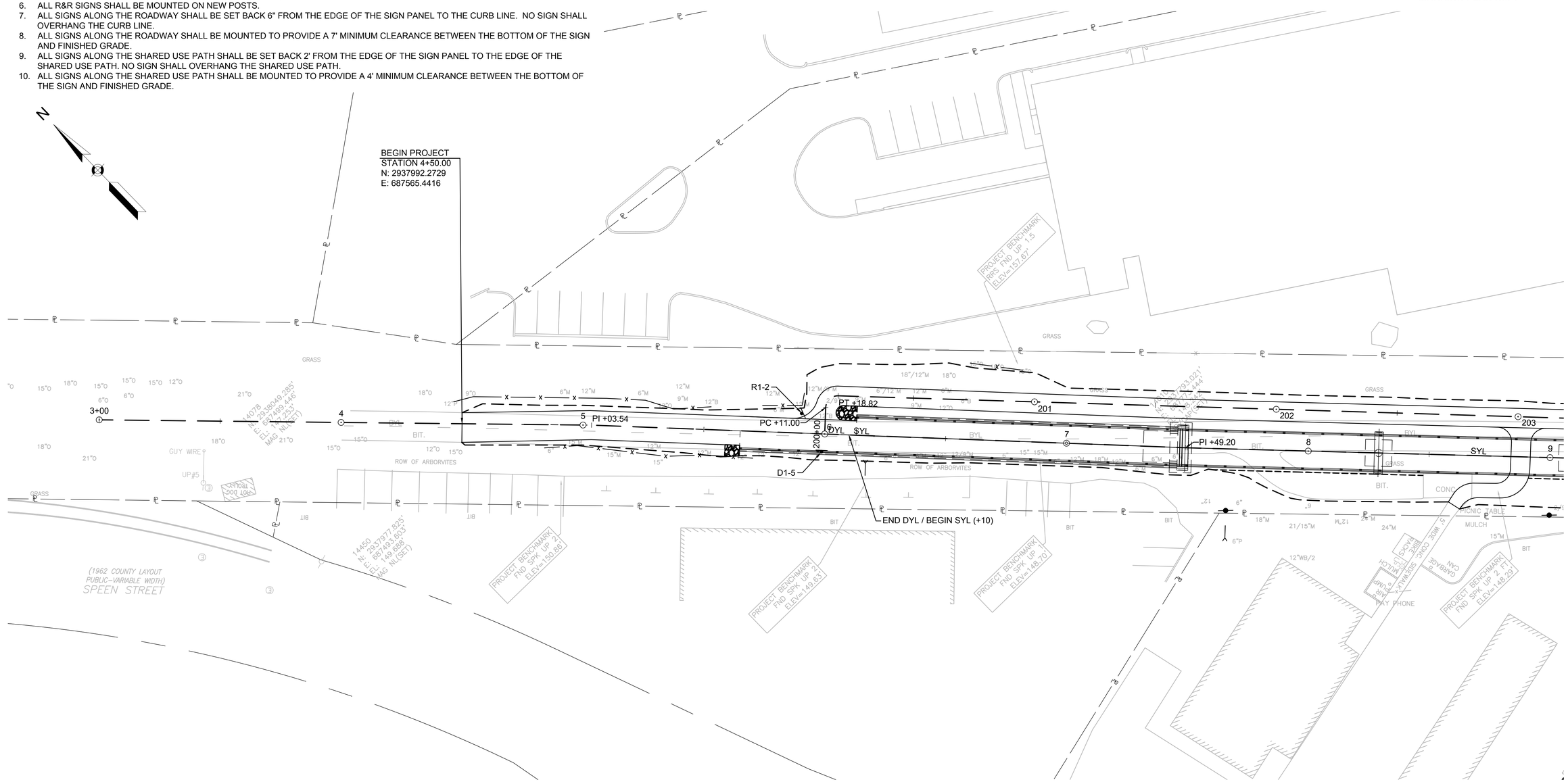

0 20 50 100
SCALE: 1" = 20'

4576 SIGN & PVMT MKG PLANS.DWG Plotted on 20-Aug-2018 2:10 PM

NATICK/FRAMINGHAM
COCHITUATE RAIL TRAIL

STATE	FED. AID PROJ. NO.	SHEET NO.	TOTAL SHEETS
MA	STP(TE)/TAP/CMQ-003S(206)	91	253
PROJECT FILE NO.	607732		

SIGN & PAVEMENT MARKING PLAN No. 2

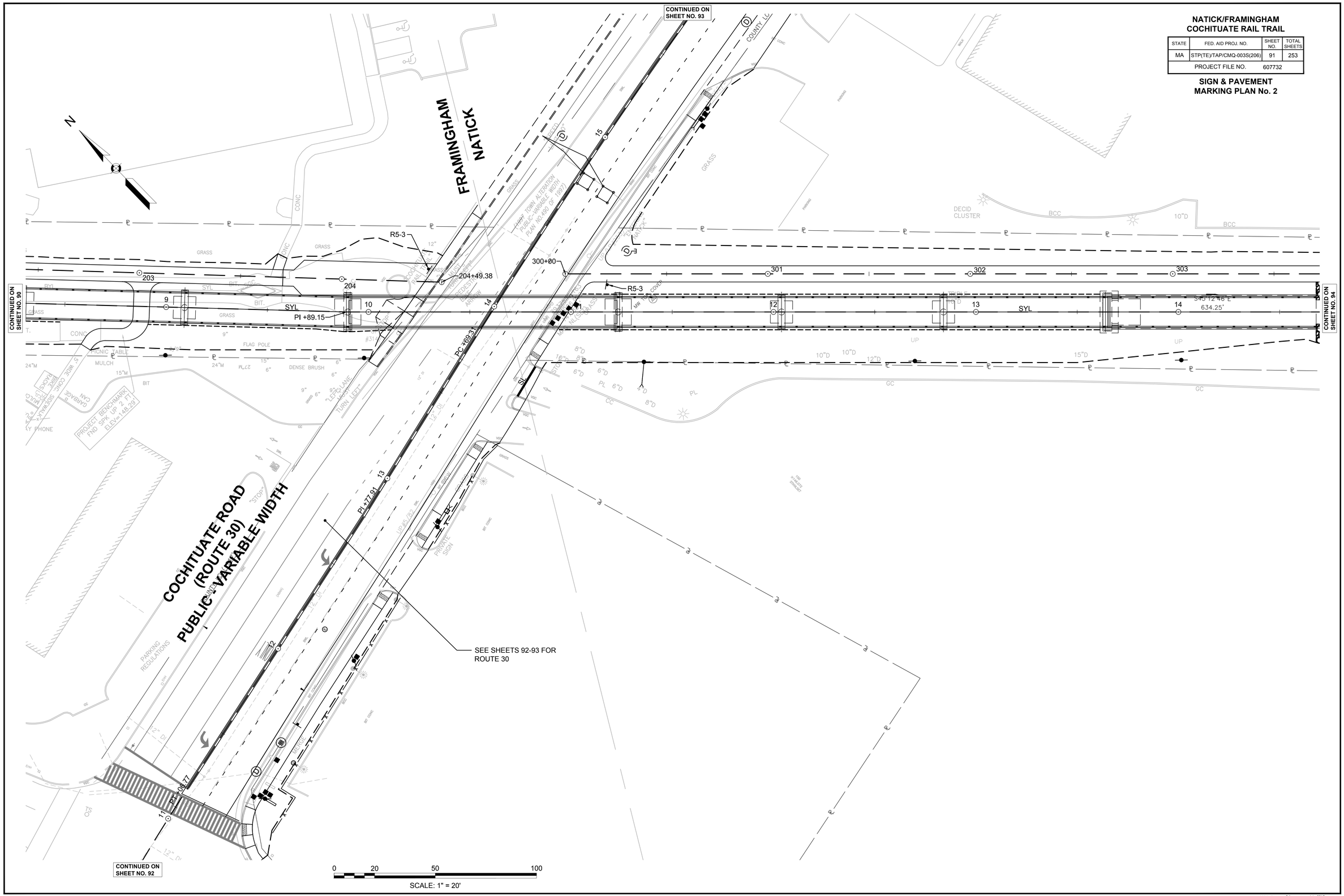

4576 SIGN & PVMT MKG PLANS.DWG Plotted on 20-Aug-2018 2:10 PM

MassDOT DWT Version: 3.1 July 2013

NATICK/FRAMINGHAM
COCHITUATE RAIL TRAIL

STATE	FED. AID PROJ. NO.	SHEET NO.	TOTAL SHEETS
MA	STP(TE)/TAP/CMQ-003S(206)	92	253
PROJECT FILE NO.	607732		

SIGN & PAVEMENT MARKING PLAN No. 3

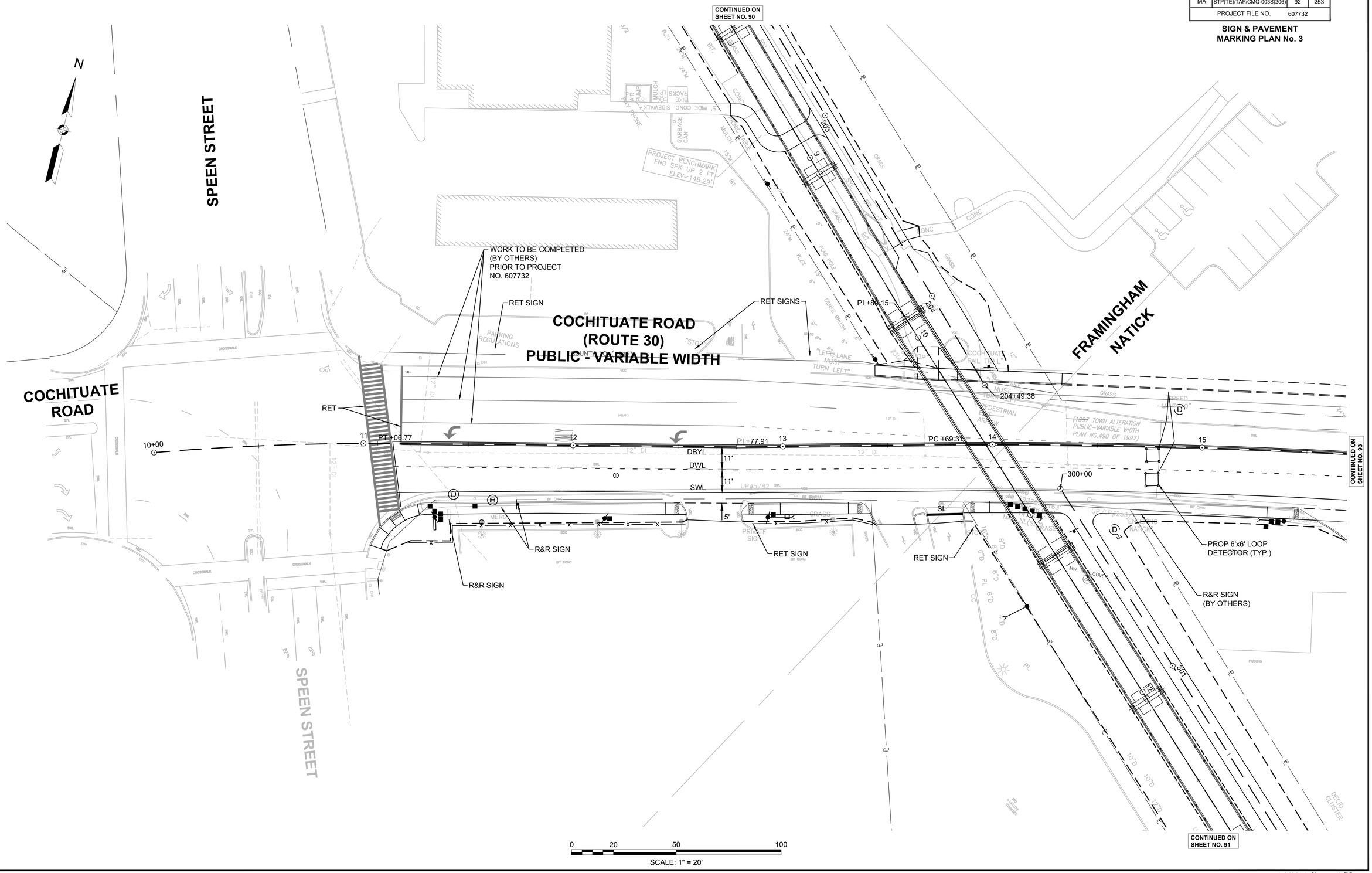

Plotted on 20-Aug-2018 2:10 PM
4576 SIGN & PVMT MKG PLANS.DWG

MassDOT DWT Version: 3.1 July 2013

NATICK/FRAMINGHAM
COCHITUATE RAIL TRAIL

STATE	FED. AID PROJ. NO.	SHEET NO.	TOTAL SHEETS
MA	STP(TE)/TAP/CMQ-003S(206)	93	253
PROJECT FILE NO.	607732		

SIGN & PAVEMENT
MARKING PLAN No. 4

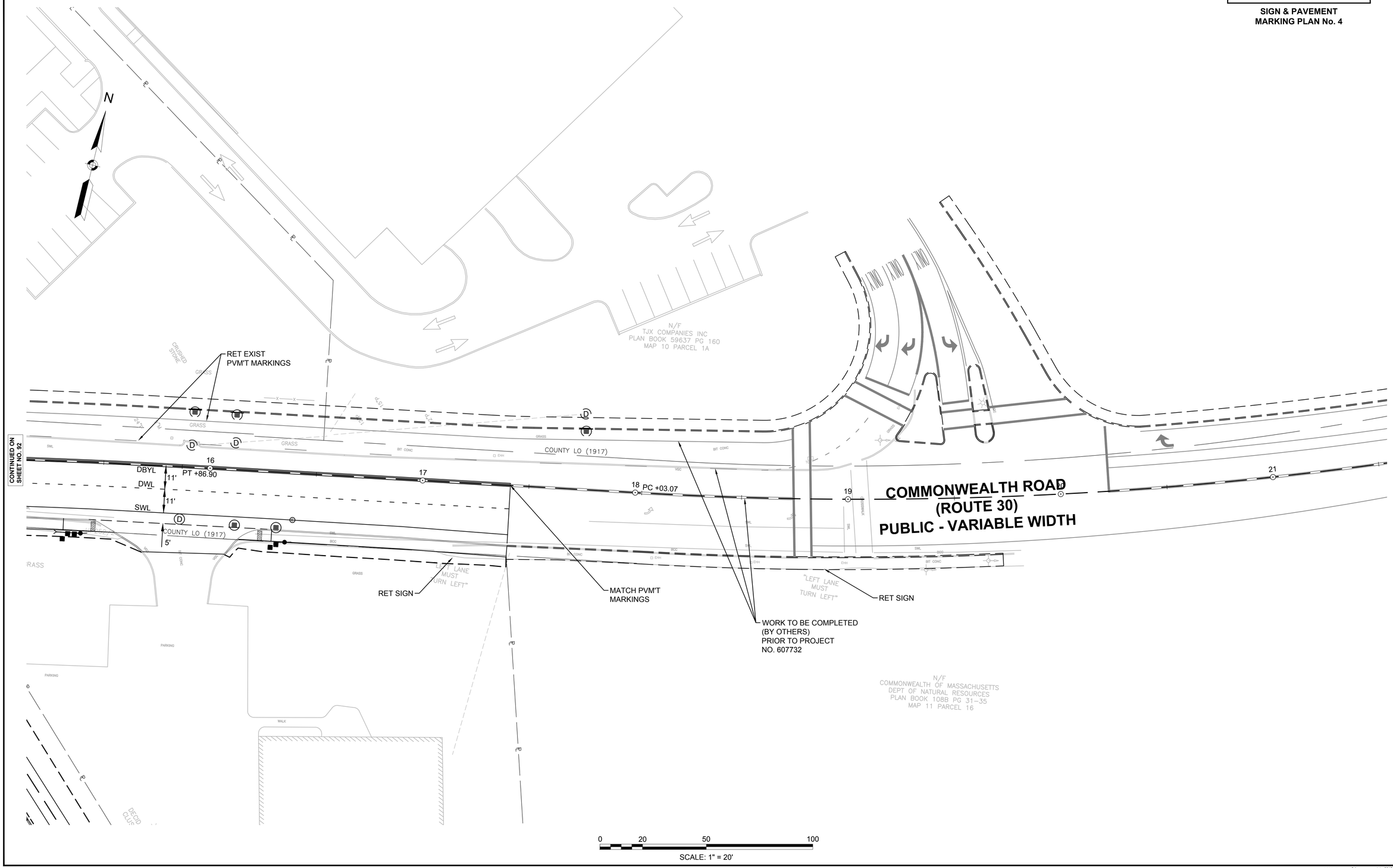

4576 SIGN & PVMT MKG PLANS.DWG Plotted on 20-Aug-2018 2:10 PM

MassDOT DWT Version: 3.1 July 2013

NATICK/FRAMINGHAM
COCHITUATE RAIL TRAIL

STATE	FED. AID PROJ. NO.	SHEET NO.	TOTAL SHEETS
MA	STP(TE)/TAP/CMQ-003S(206)	94	253
PROJECT FILE NO.	607732		

SIGN & PAVEMENT
MARKING PLAN No. 5 & 6

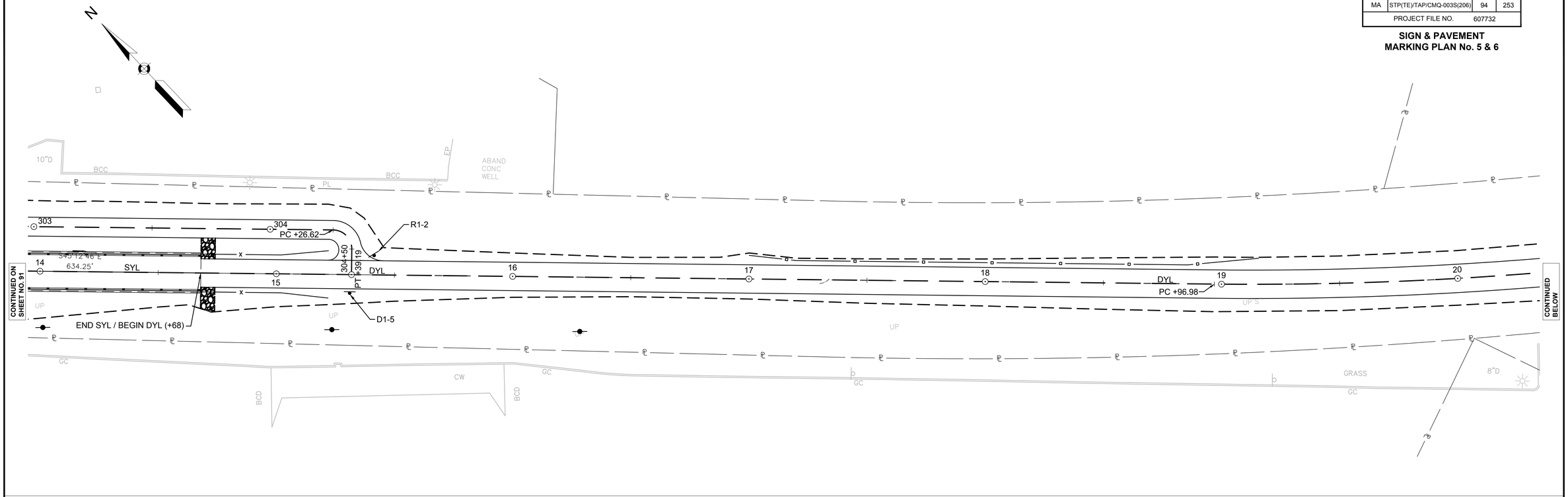

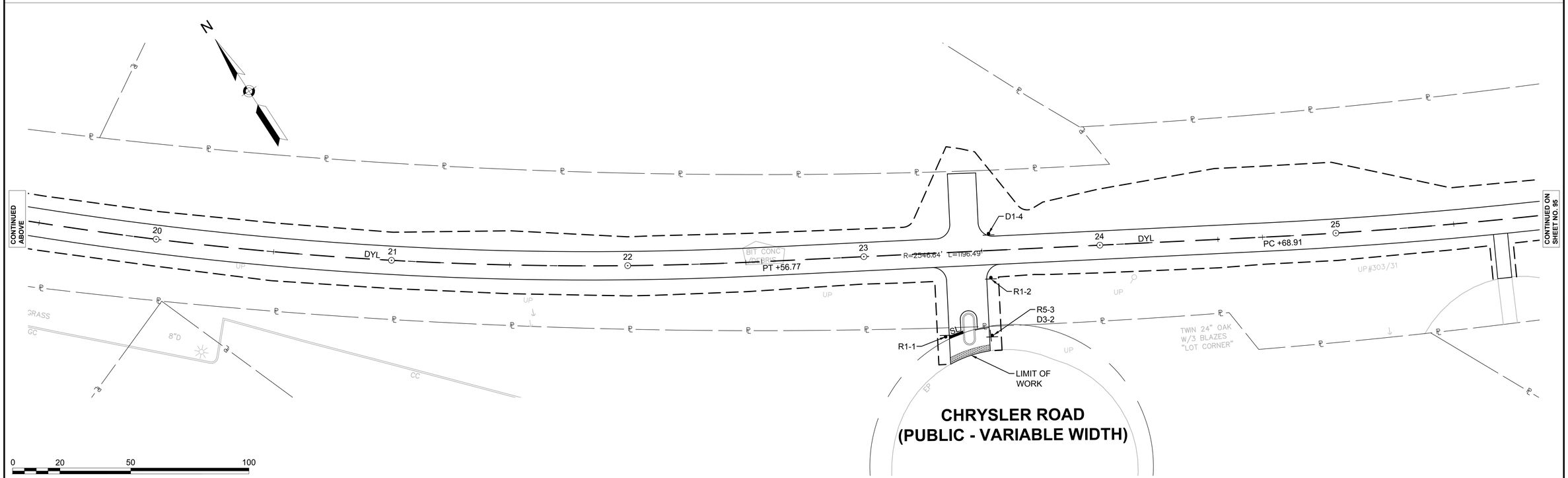

4576 SIGN & PVMT MKG PLANS.DWG Plotted on 20-Aug-2018 2:10 PM

MassDOT DWT Version: 3-1 July 2013

NATICK/FRAMINGHAM
COCHITUATE RAIL TRAIL

STATE	FED. AID PROJ. NO.	SHEET NO.	TOTAL SHEETS
MA	STP(TE)/TAP/CMQ-003S(206)	95	253
PROJECT FILE NO.	607732		

SIGN & PAVEMENT
MARKING PLAN No. 7

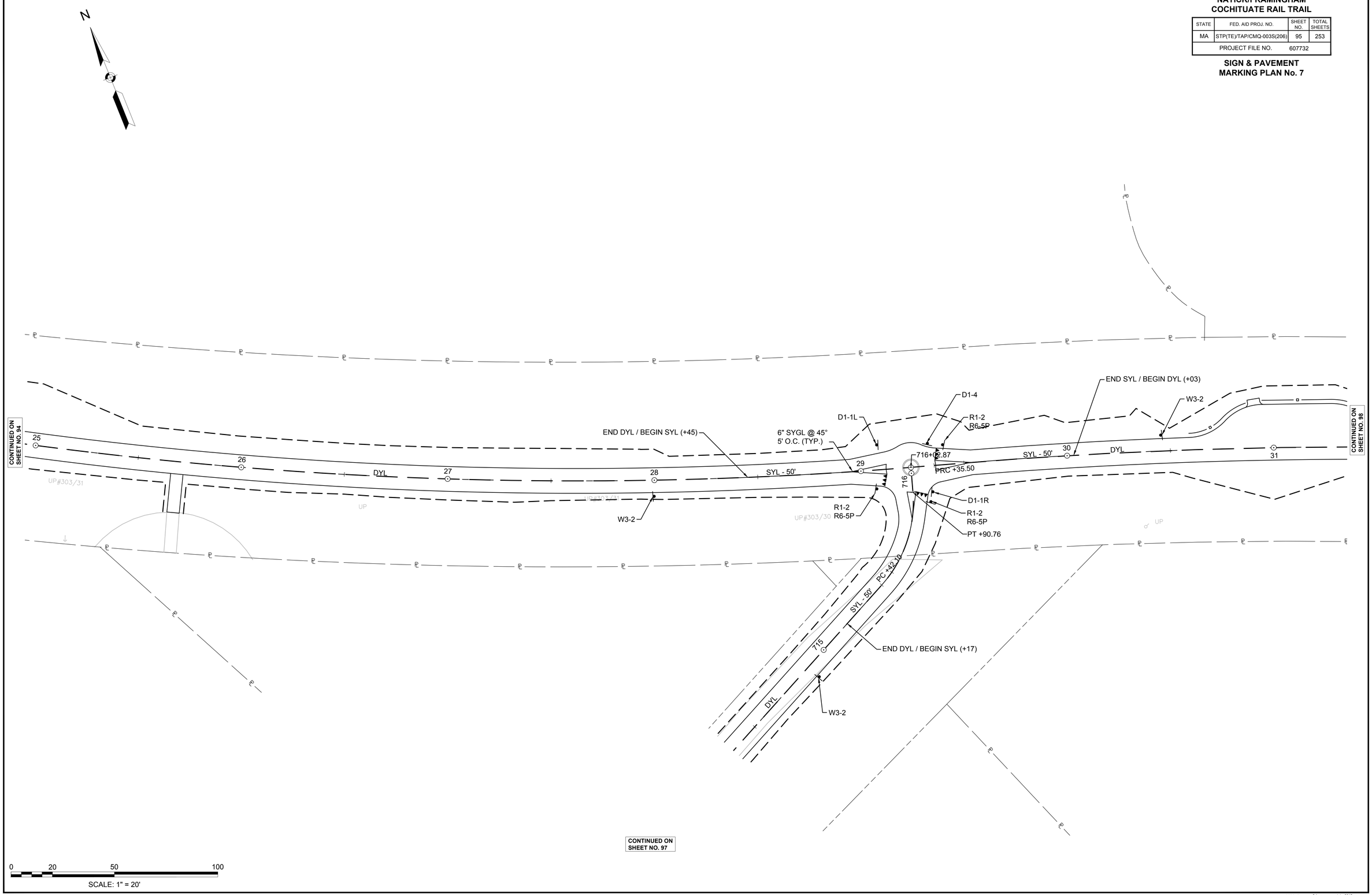

4576 SIGN & PVMT MKG PLANS.DWG Plotted on 20-Aug-2018 2:10 PM

MassDOT DWT Version: 3.1 July 2013

NATICK/FRAMINGHAM
COCHITUATE RAIL TRAIL

STATE	FED. AID PROJ. NO.	SHEET NO.	TOTAL SHEETS
MA	STP(TE)/TAP/CMQ-003S(206)	96	253
PROJECT FILE NO.	607732		

SIGN & PAVEMENT MARKING PLAN No. 8

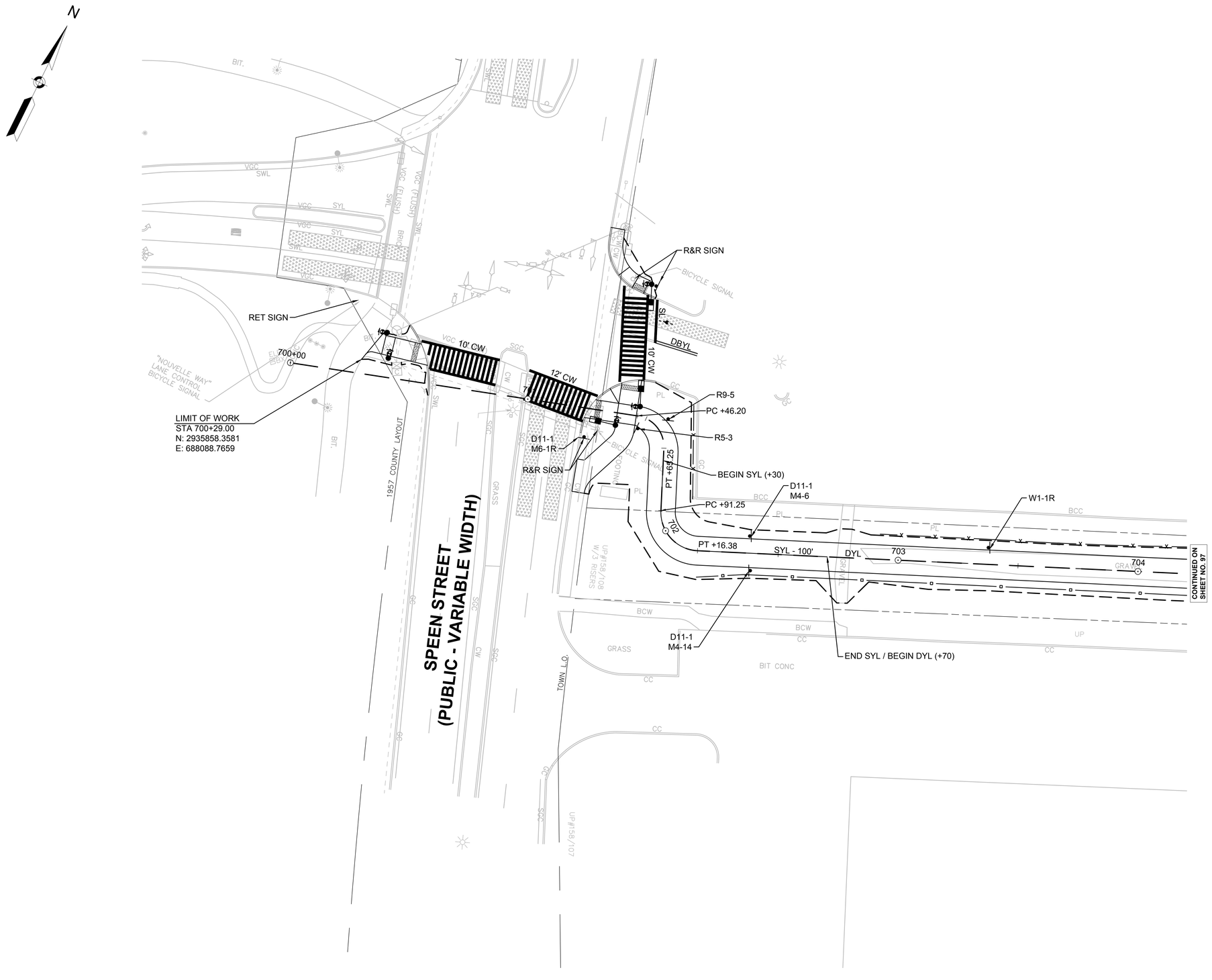

4576 SIGN & PVMT MKG PLANS.DWG Plotted on 20-Aug-2018 2:10 PM

MassDOT DWT Version: 3.1 July 2013

NATICK/FRAMINGHAM
COCHITUATE RAIL TRAIL

STATE	FED. AID PROJ. NO.	SHEET NO.	TOTAL SHEETS
MA	STP(TE)/TAP/CMQ-003S(206)	97	253
PROJECT FILE NO.	607732		

SIGN & PAVEMENT
MARKING PLAN No. 9 & 10

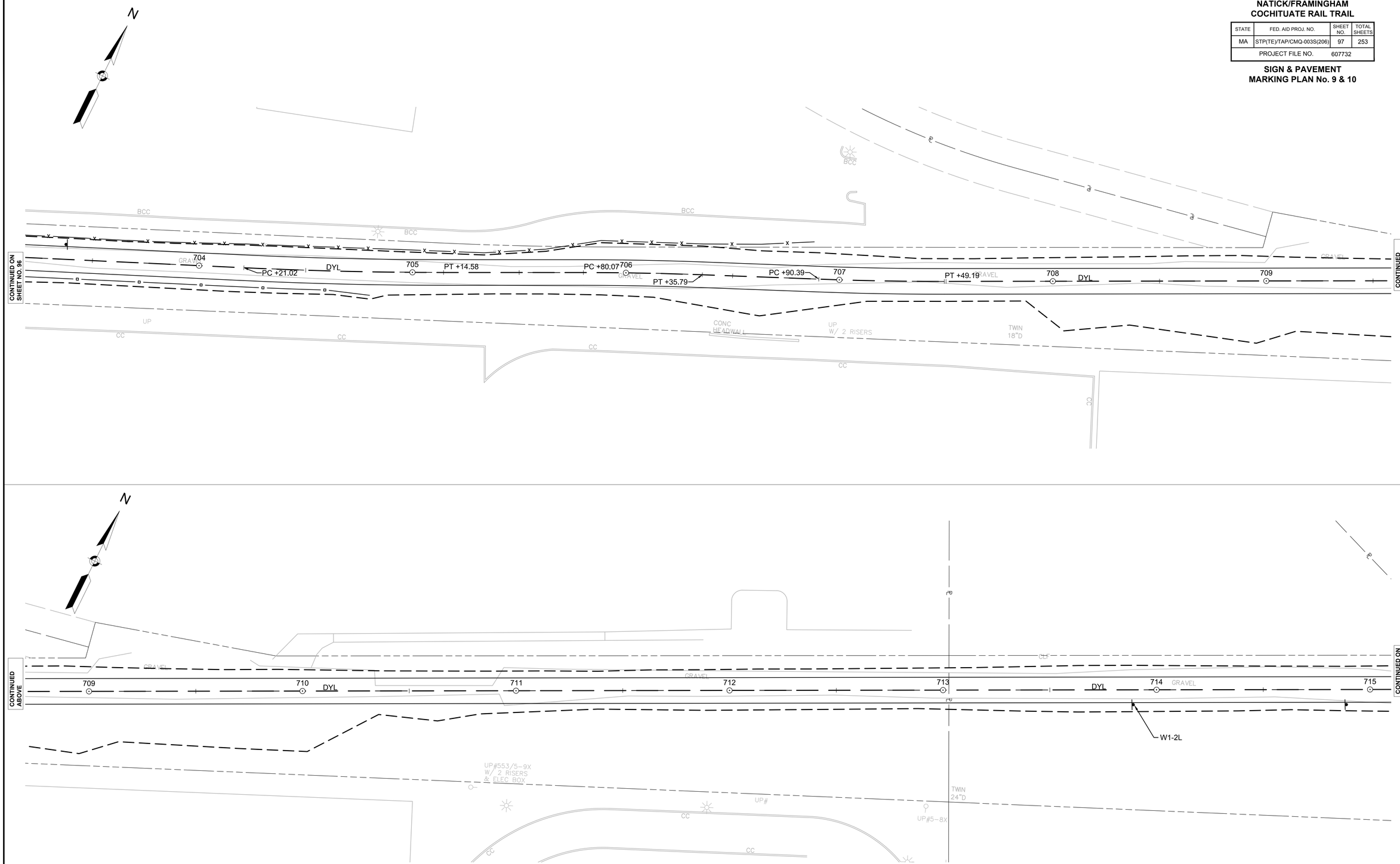

4576 SIGN & PVMT MKG PLANS.DWG Plotted on 20-Aug-2018 2:10 PM

MassDOT DWT Version: 3.1 July 2013

NATICK/FRAMINGHAM
COCHITUATE RAIL TRAIL

STATE	FED. AID PROJ. NO.	SHEET NO.	TOTAL SHEETS
MA	STP(TE)/TAP/CMQ-003S(206)	98	253
PROJECT FILE NO.	607732		

SIGN & PAVEMENT
MARKING PLAN No. 11 & 12

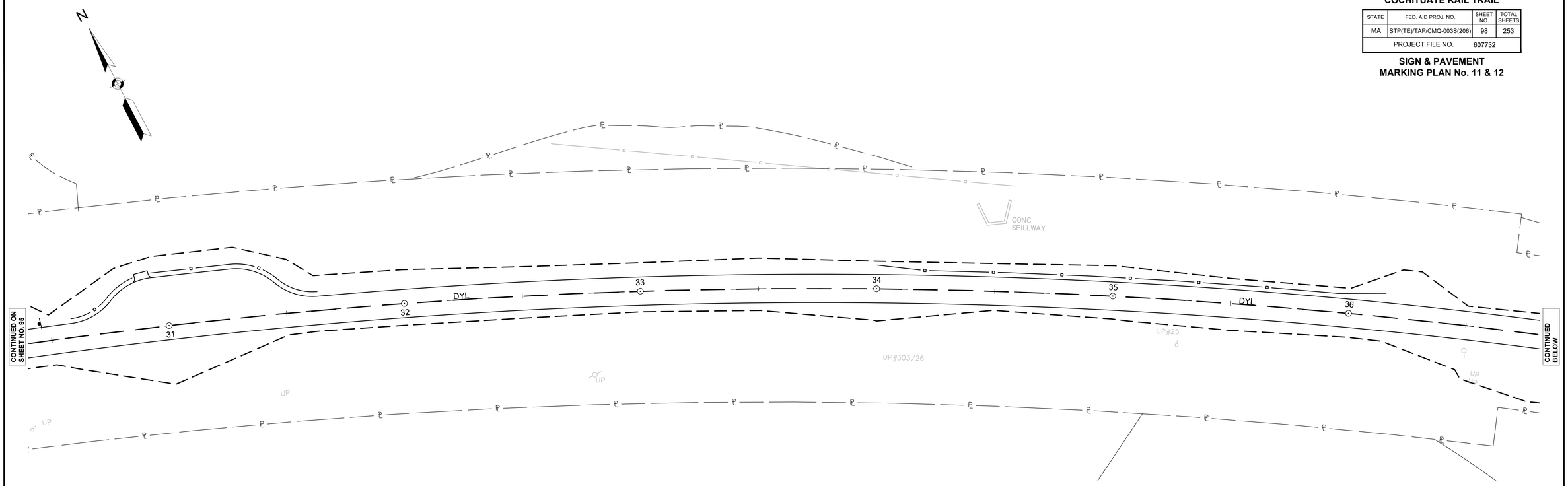

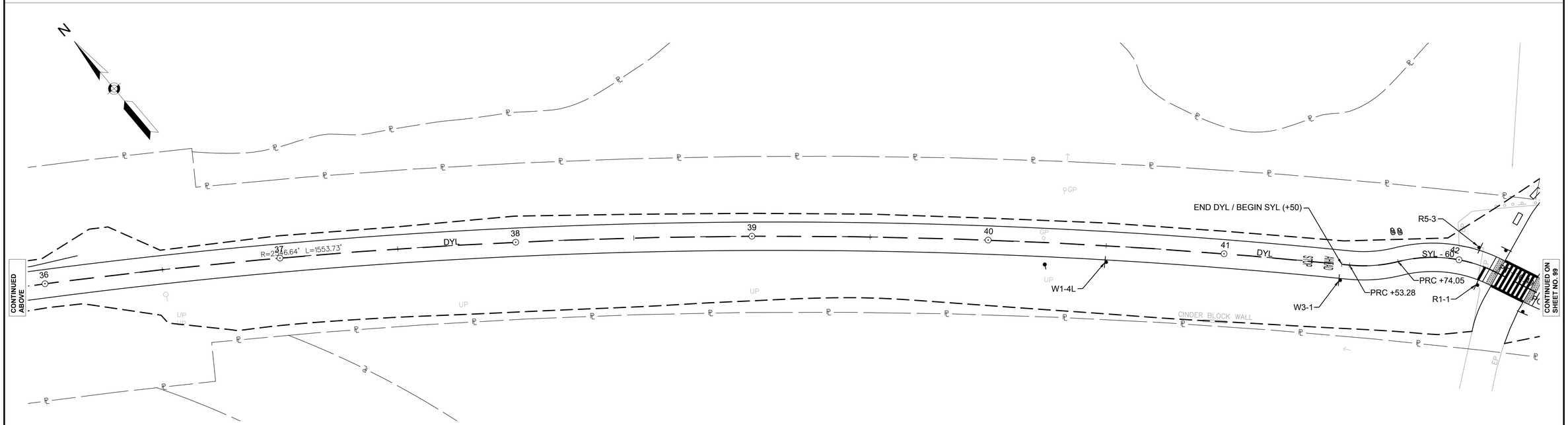

0 20 50 100
SCALE: 1" = 20'

4576 SIGN & PVMT MKG PLANS.DWG Plotted on 20-Aug-2018 2:11 PM

NATICK/FRAMINGHAM
COCHITUATE RAIL TRAIL

STATE	FED. AID PROJ. NO.	SHEET NO.	TOTAL SHEETS
MA	STP(TE)/TAP/CMQ-003S(206)	99	253
PROJECT FILE NO.	607732		

SIGN & PAVEMENT
MARKING PLAN No. 13 & 14

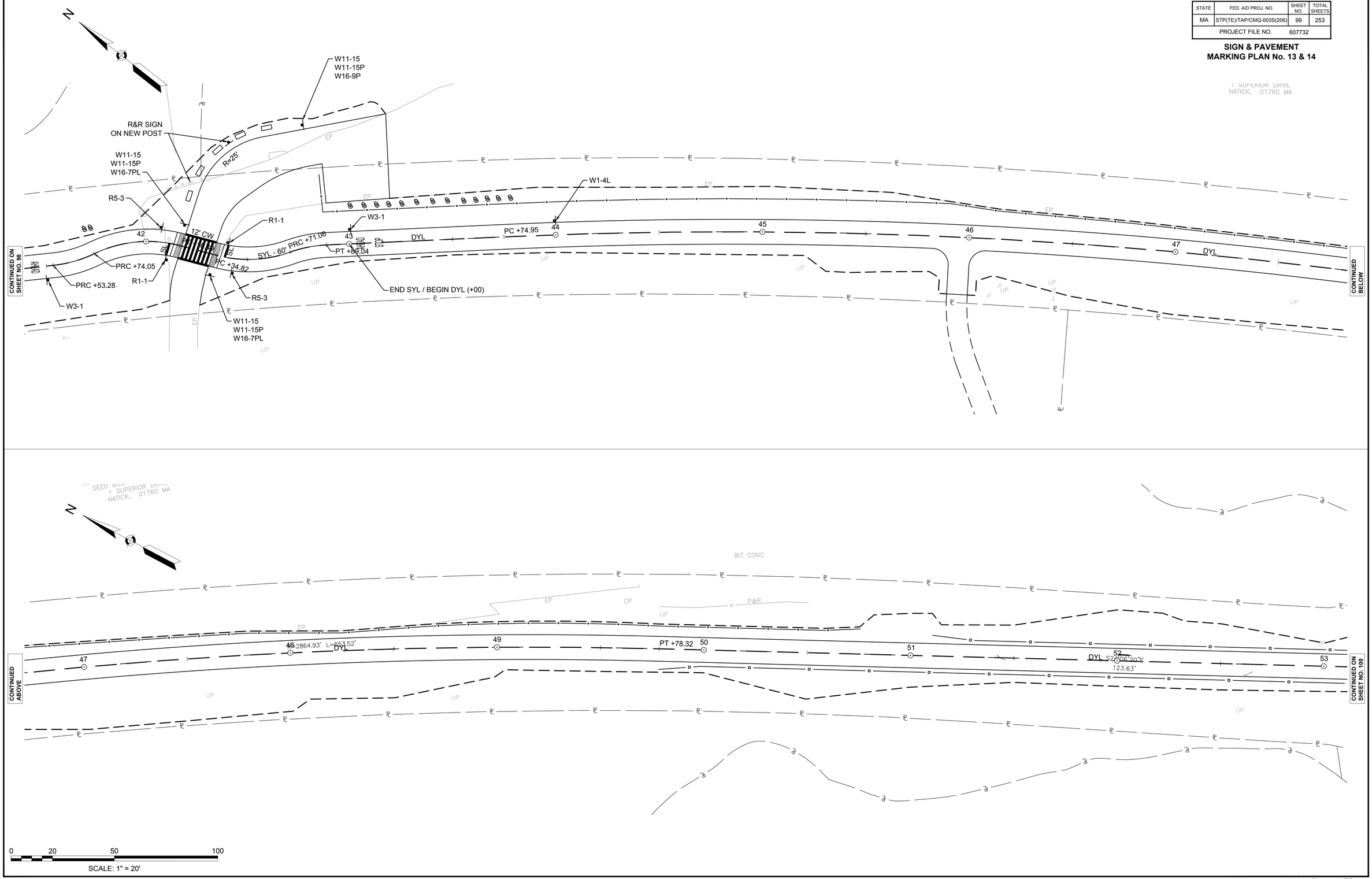

Plotted on 20-Aug-2018 2:11 PM

4576 SIGN & PVMT MKG PLANS.DWG

NATICK/FRAMINGHAM
COCHITUATE RAIL TRAIL

STATE	FED. AID PROJ. NO.	SHEET NO.	TOTAL SHEETS
MA	STP(TE)/TAP/CMQ-003S(206)	100	253
PROJECT FILE NO.	607732		

SIGN & PAVEMENT
MARKING PLAN No. 15 & 16

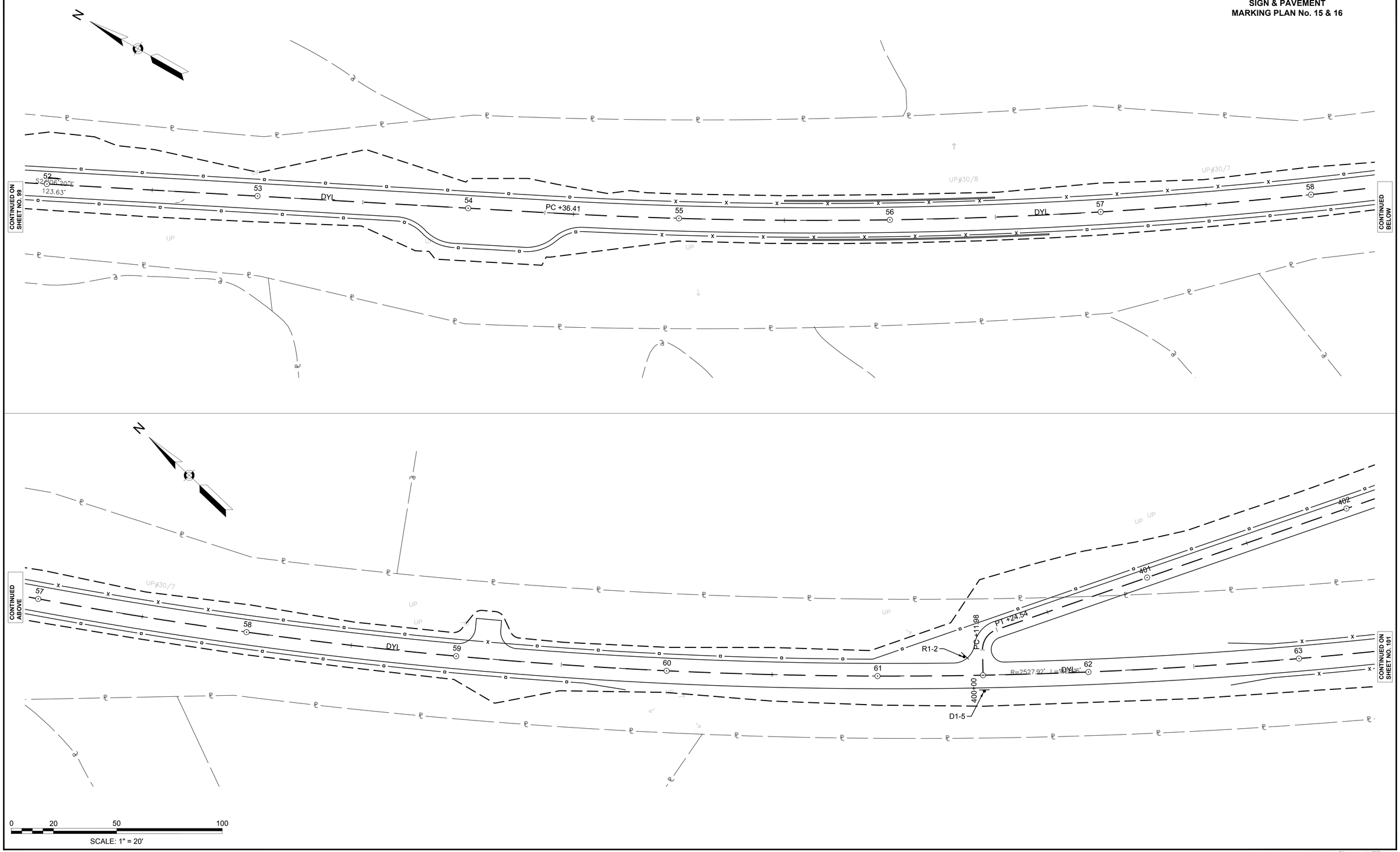

Plotted on 20-Aug-2018 2:11 PM

4576 SIGN & PVMT MKG PLANS.DWG

NATICK/FRAMINGHAM
COCHITUATE RAIL TRAIL

STATE	FED. AID PROJ. NO.	SHEET NO.	TOTAL SHEETS
MA	STP(TE)/TAP/CMQ-003S(206)	101	253
PROJECT FILE NO.	607732		

SIGN & PAVEMENT MARKING PLAN No. 17

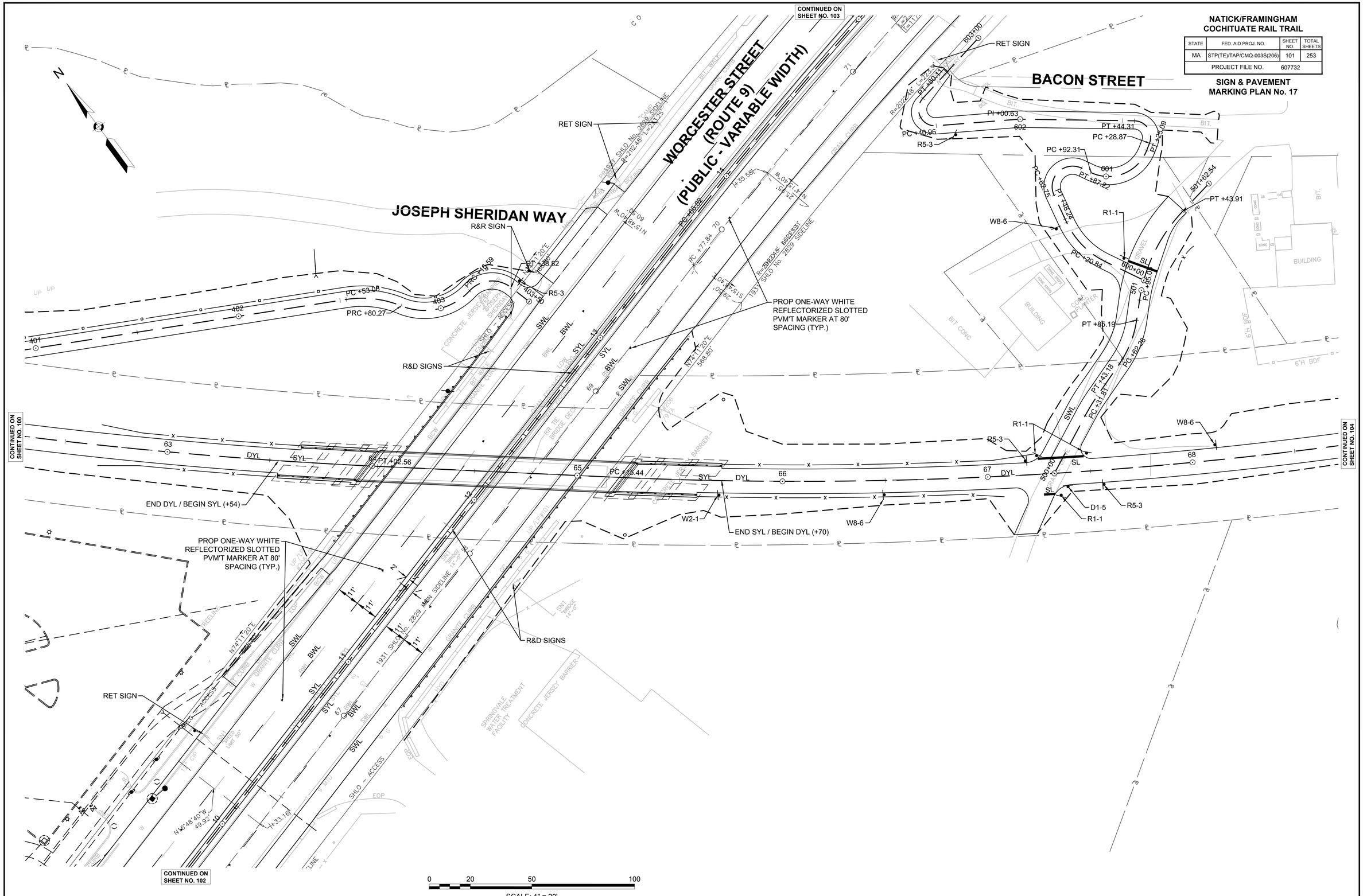

4576 SIGN & PVMT MKG PLANS.DWG Plotted on 20-Aug-2018 2:11 PM

MassDOT DWT Version: 3.1 July 2013

NATICK/FRAMINGHAM
COCHITUATE RAIL TRAIL

STATE	FED. AID PROJ. NO.	SHEET NO.	TOTAL SHEETS
MA	STP(TE)/TAP/CMQ-003S(206)	102	253
PROJECT FILE NO.	607732		

SIGN & PAVEMENT MARKING PLAN No. 18

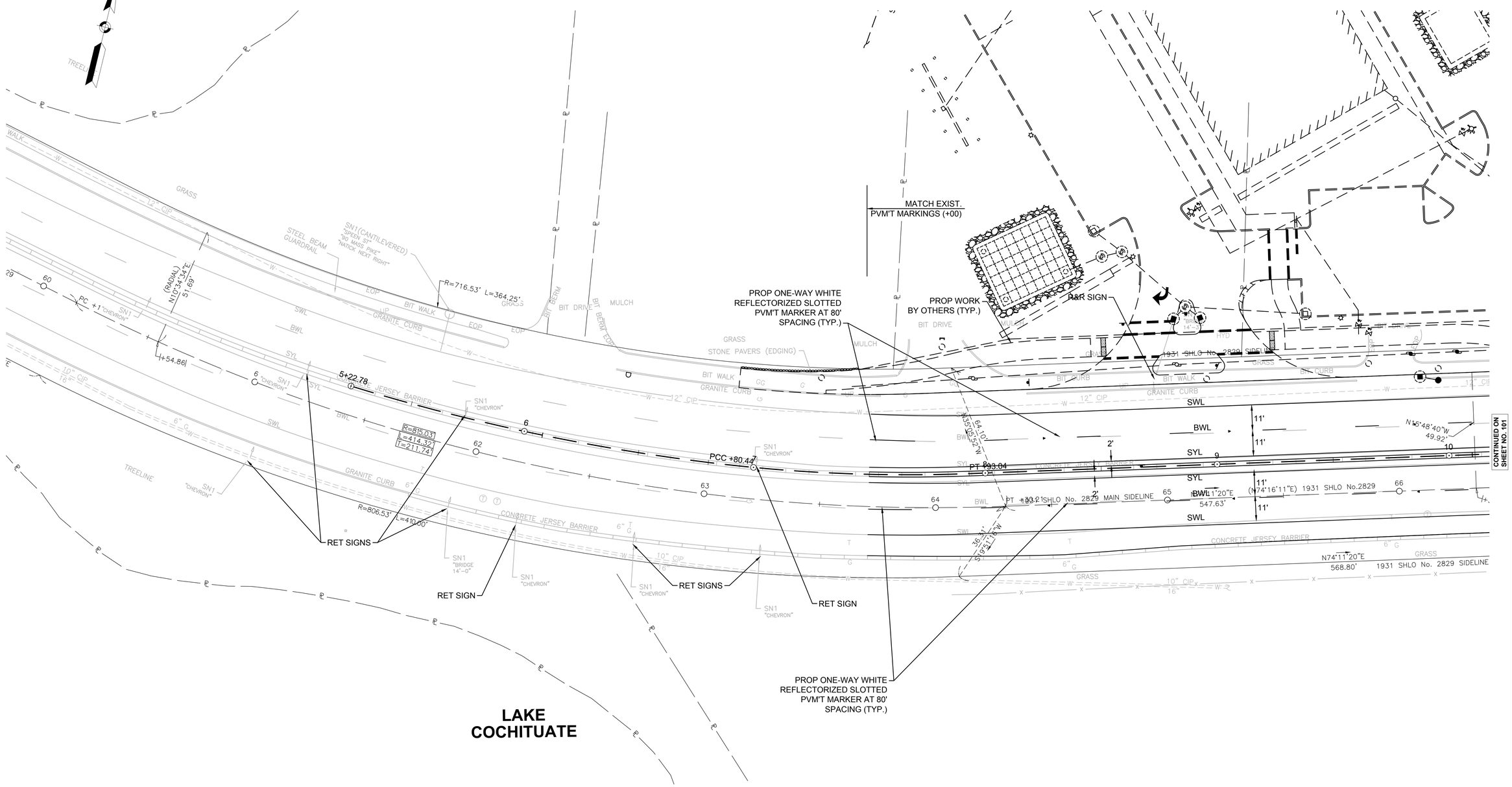

CONTINUED ON SHEET NO. 101

0 20 50 100

SCALE: 1" = 20'

4576 SIGN & PVMT MKG PLANS.DWG Plotted on 20-Aug-2018 2:11 PM

NATICK/FRAMINGHAM
COCHITUATE RAIL TRAIL

STATE	FED. AID PROJ. NO.	SHEET NO.	TOTAL SHEETS
MA	STP(TE)/TAP/CMQ-003S(206)	103	253
PROJECT FILE NO.	607732		

SIGN & PAVEMENT MARKING PLAN No. 19

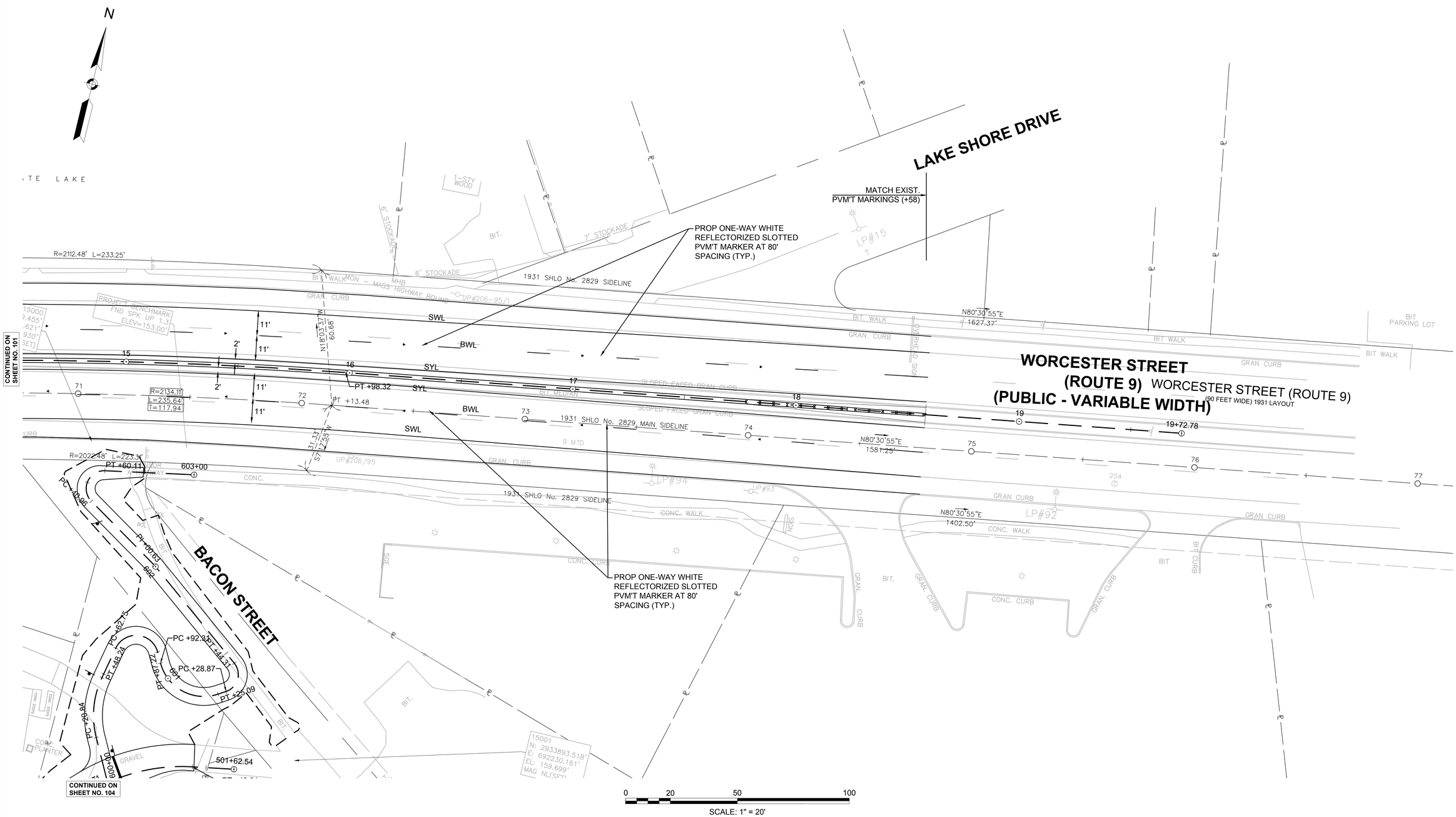

4576 SIGN & PVMT MKG PLANS.DWG Plotted on 31-Aug-2018 10:13 AM

MassDOT DWT Version: 3.1 July 2013

NATICK/FRAMINGHAM
COCHITUATE RAIL TRAIL

STATE	FED. AID PROJ. NO.	SHEET NO.	TOTAL SHEETS
MA	STP(TE)/TAP/CMQ-003S(206)	104	253
PROJECT FILE NO.	607732		

SIGN & PAVEMENT
MARKING PLAN No. 20 & 21

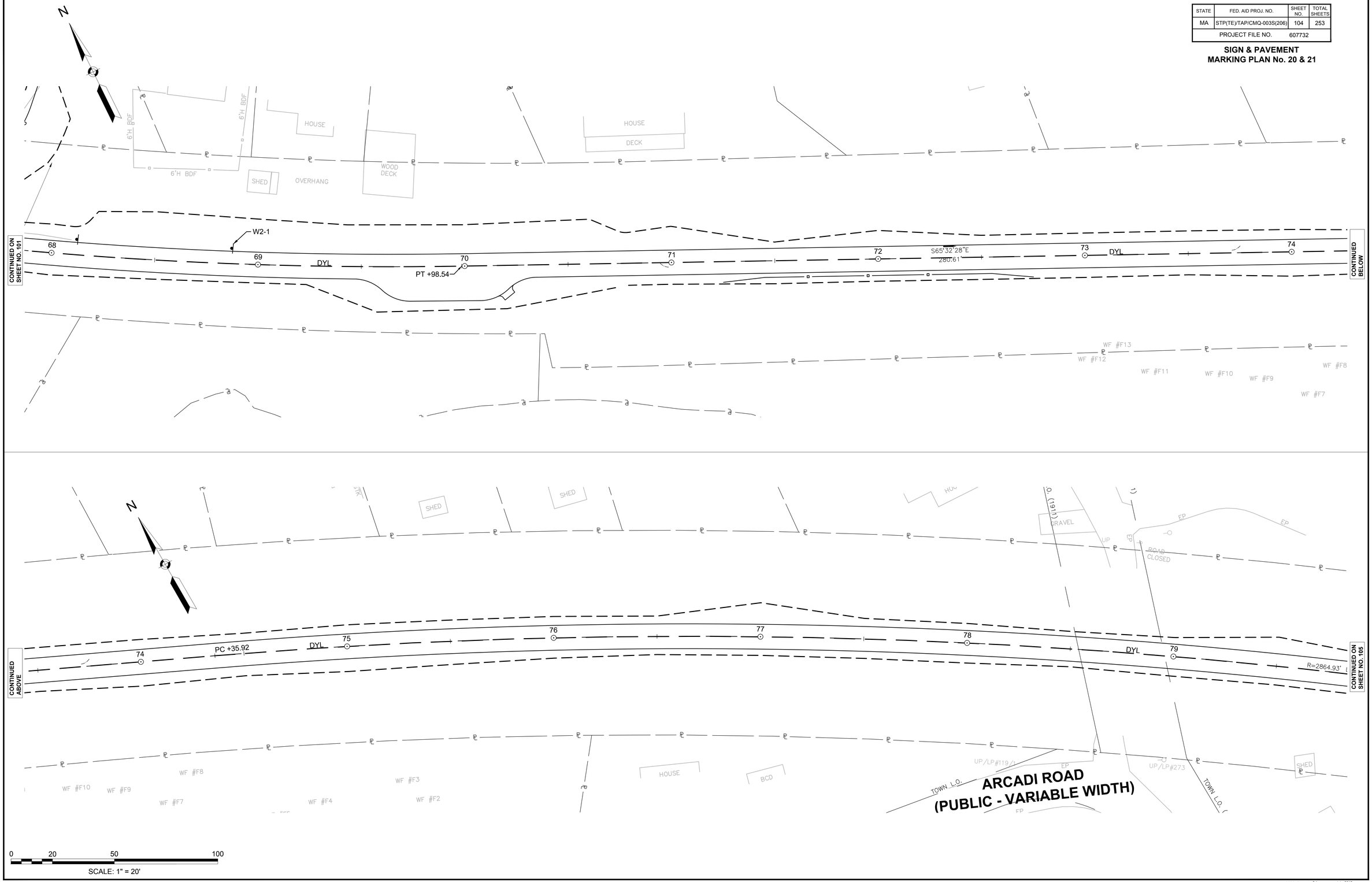

4576 SIGN & PVMT MKG PLANS.DWG Plotted on 31-Aug-2018 10:13 AM

MassDOT DWT Version: 3.1 July 2013

NATICK/FRAMINGHAM
COCHITUATE RAIL TRAIL

STATE	FED. AID PROJ. NO.	SHEET NO.	TOTAL SHEETS
MA	STP(TE)/TAP/CMQ-003S(206)	105	253
PROJECT FILE NO.	607732		

SIGN & PAVEMENT
MARKING PLAN No. 22 & 23

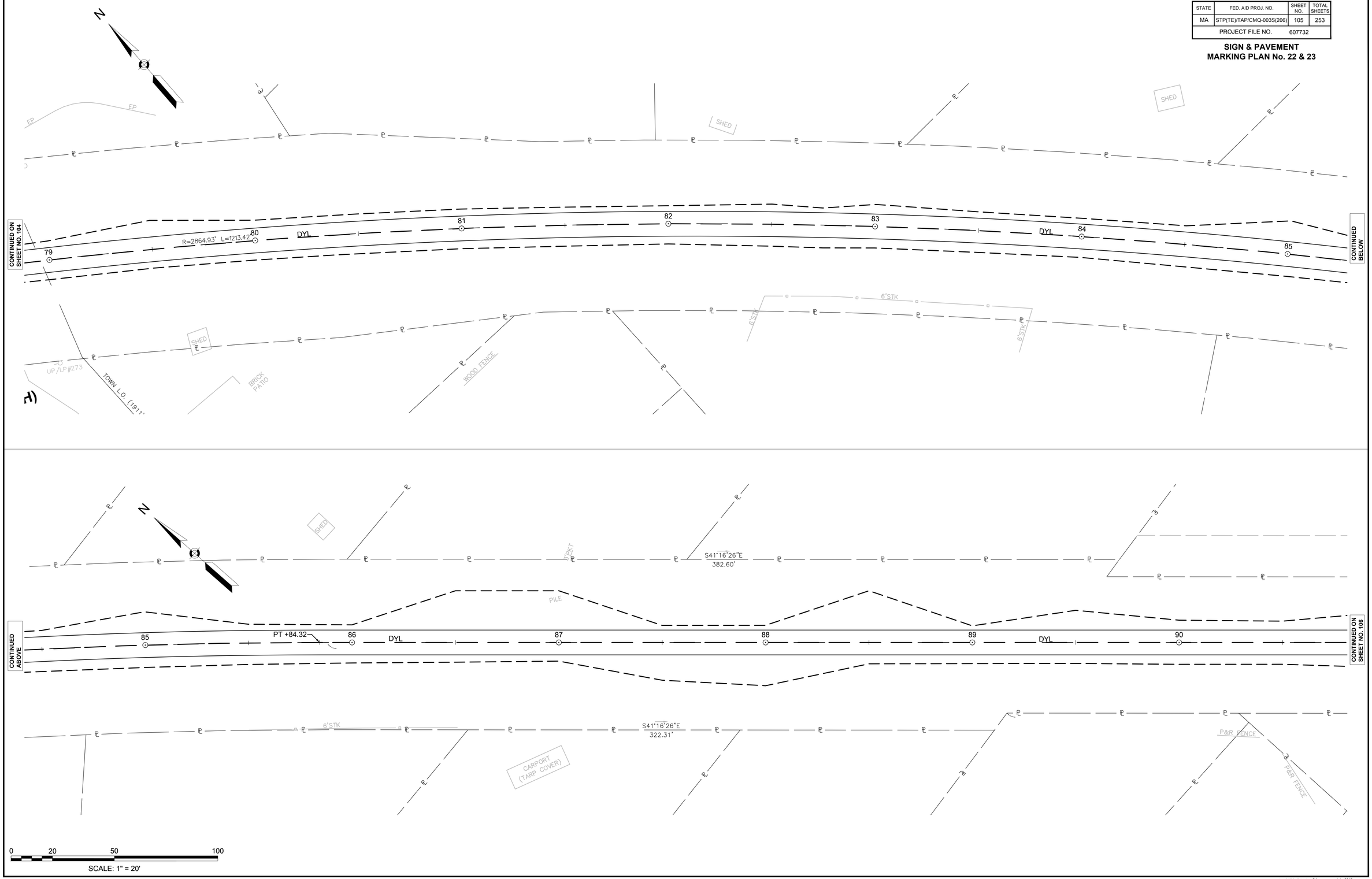

4576 SIGN & PVMT MKG PLANS.DWG Plotted on 20-Aug-2018 2:12 PM

NATICK/FRAMINGHAM
COCHITUATE RAIL TRAIL

STATE	FED. AID PROJ. NO.	SHEET NO.	TOTAL SHEETS
MA	STP(TE)/TAP/CMQ-003S(206)	106	253
PROJECT FILE NO.	607732		

SIGN & PAVEMENT
MARKING PLAN No. 24 & 25

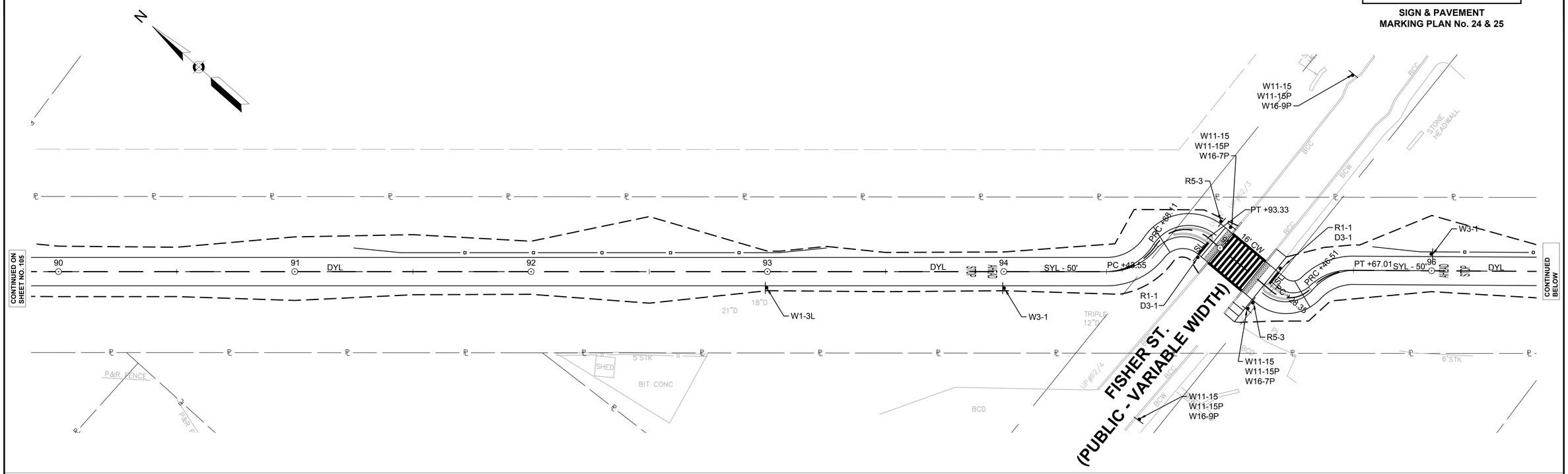

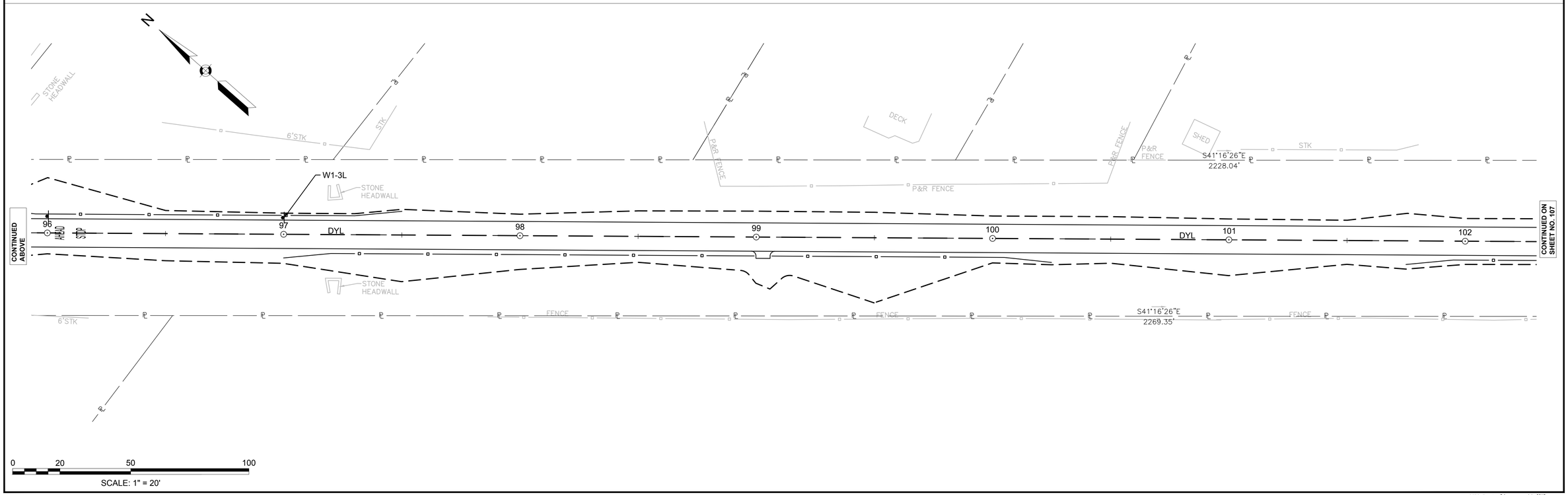

Plotted on 20-Aug-2018 2:12 PM

4576 SIGN & PVMT MKG PLANS.DWG

NATICK/FRAMINGHAM
COCHITUATE RAIL TRAIL

STATE	FED. AID PROJ. NO.	SHEET NO.	TOTAL SHEETS
MA	STP(TE)/TAP/CMQ-003S(206)	107	253
PROJECT FILE NO.	607732		

SIGN & PAVEMENT MARKING PLAN No. 26

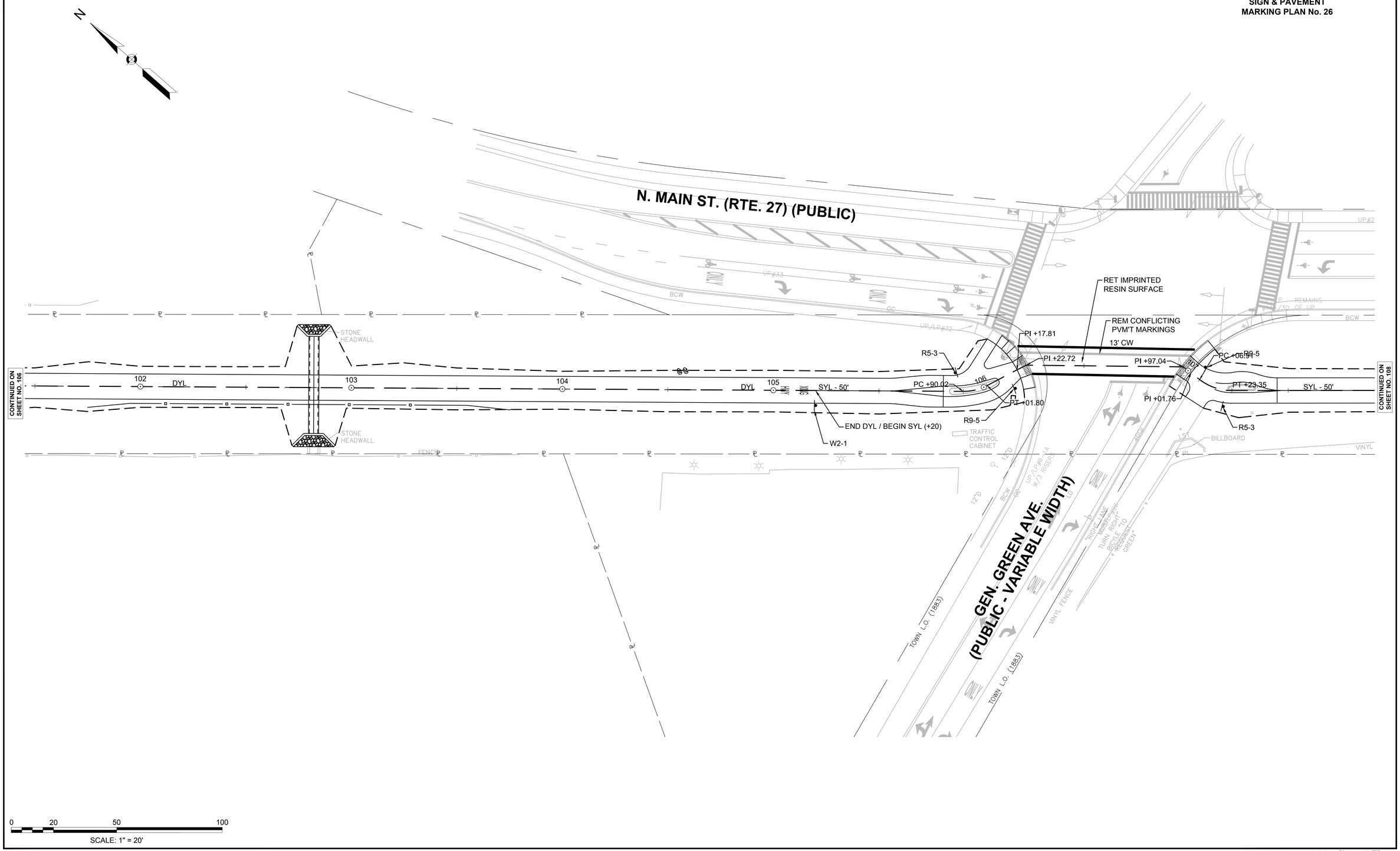

4576 SIGN & PVMT MKG PLANS.DWG Plotted on 20-Aug-2018 2:12 PM

MassDOT DWT Version: 3.1 July 2013

NATICK/FRAMINGHAM
COCHITUATE RAIL TRAIL

STATE	FED. AID PROJ. NO.	SHEET NO.	TOTAL SHEETS
MA	STP(TE)/TAP/CMQ-003S(206)	108	253
PROJECT FILE NO.	607732		

SIGN & PAVEMENT MARKING PLAN No. 27

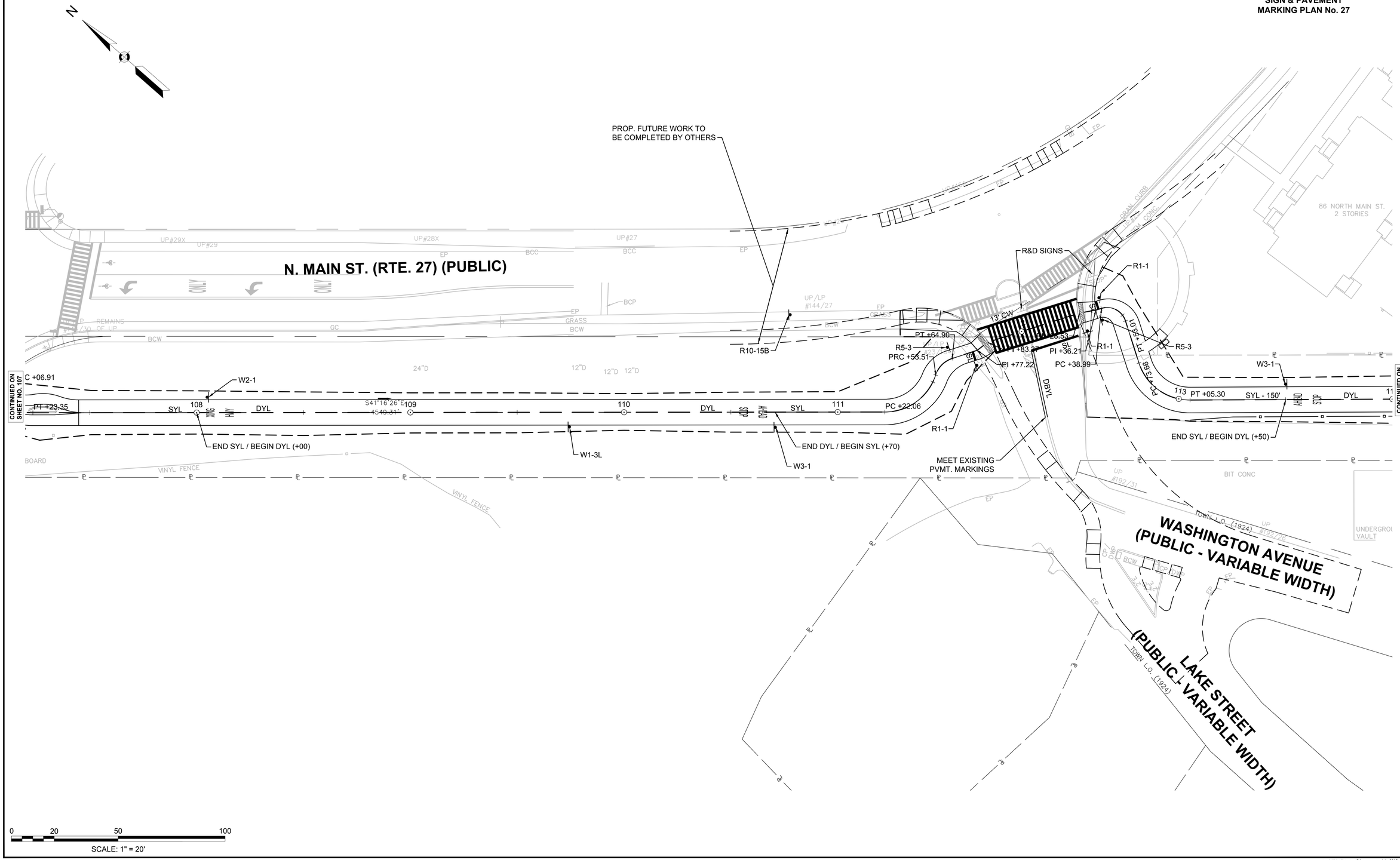

4576 SIGN & PVMT MKG PLANS.DWG Plotted on 20-Aug-2018 2:12 PM

MassDOT DWT Version: 3.1 July 2013

NATICK/FRAMINGHAM
COCHITUATE RAIL TRAIL

STATE	FED. AID PROJ. NO.	SHEET NO.	TOTAL SHEETS
MA	STP(TE)/TAP/CMQ-003S(206)	109	253
PROJECT FILE NO.	607732		

SIGN & PAVEMENT
MARKING PLAN No. 28 & 29

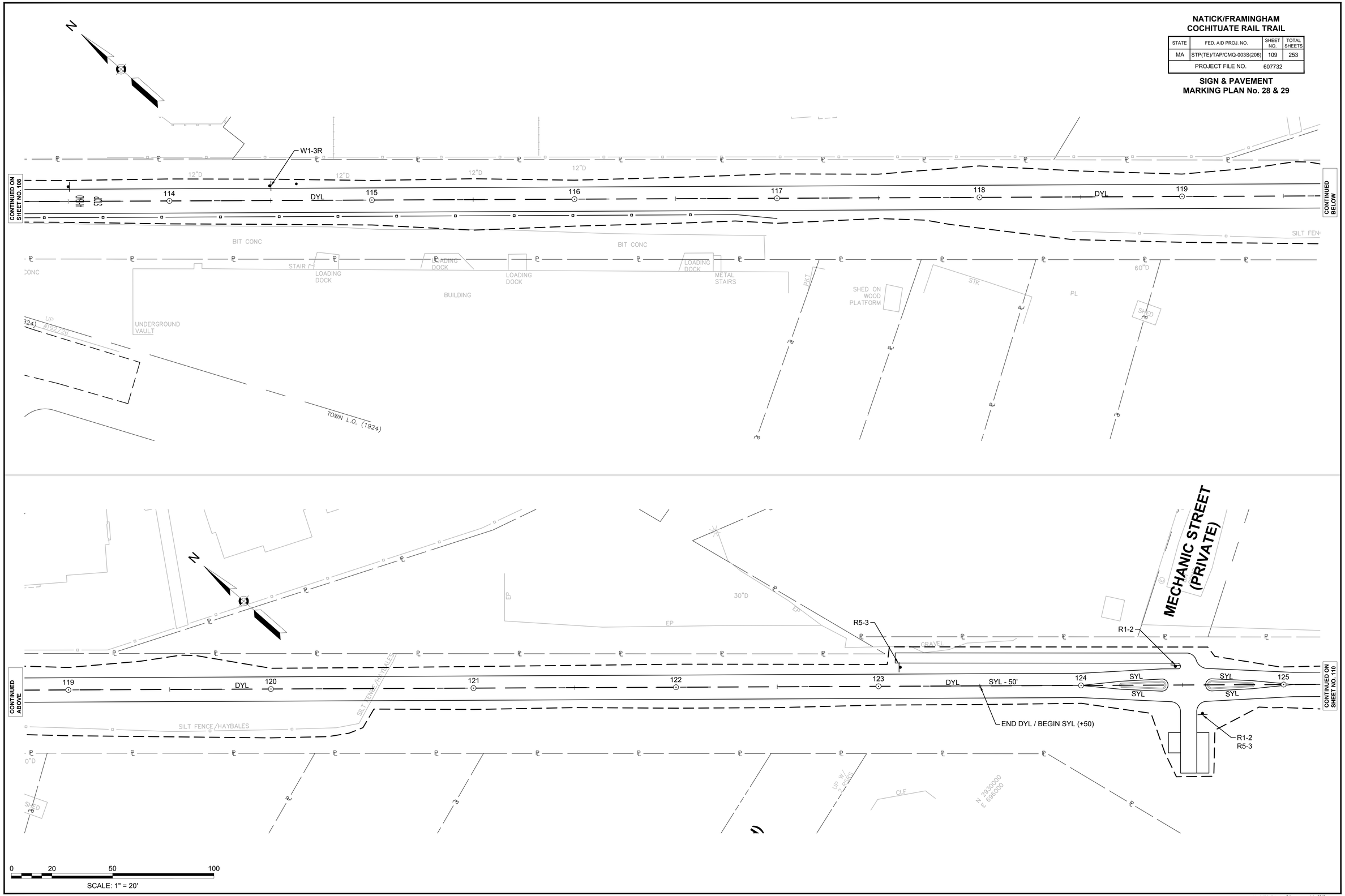

Plotted on 20-Aug-2018 2:12 PM

4576 SIGN & PVMT MKG PLANS.DWG

MassDOT DWT Version: 3-1 July 2013

NATICK/FRAMINGHAM
COCHITUATE RAIL TRAIL

STATE	FED. AID PROJ. NO.	SHEET NO.	TOTAL SHEETS
MA	STP(TE)/TAP/CMQ-003S(206)	110	253
PROJECT FILE NO.	607732		

SIGN & PAVEMENT MARKING PLAN 30 & 31

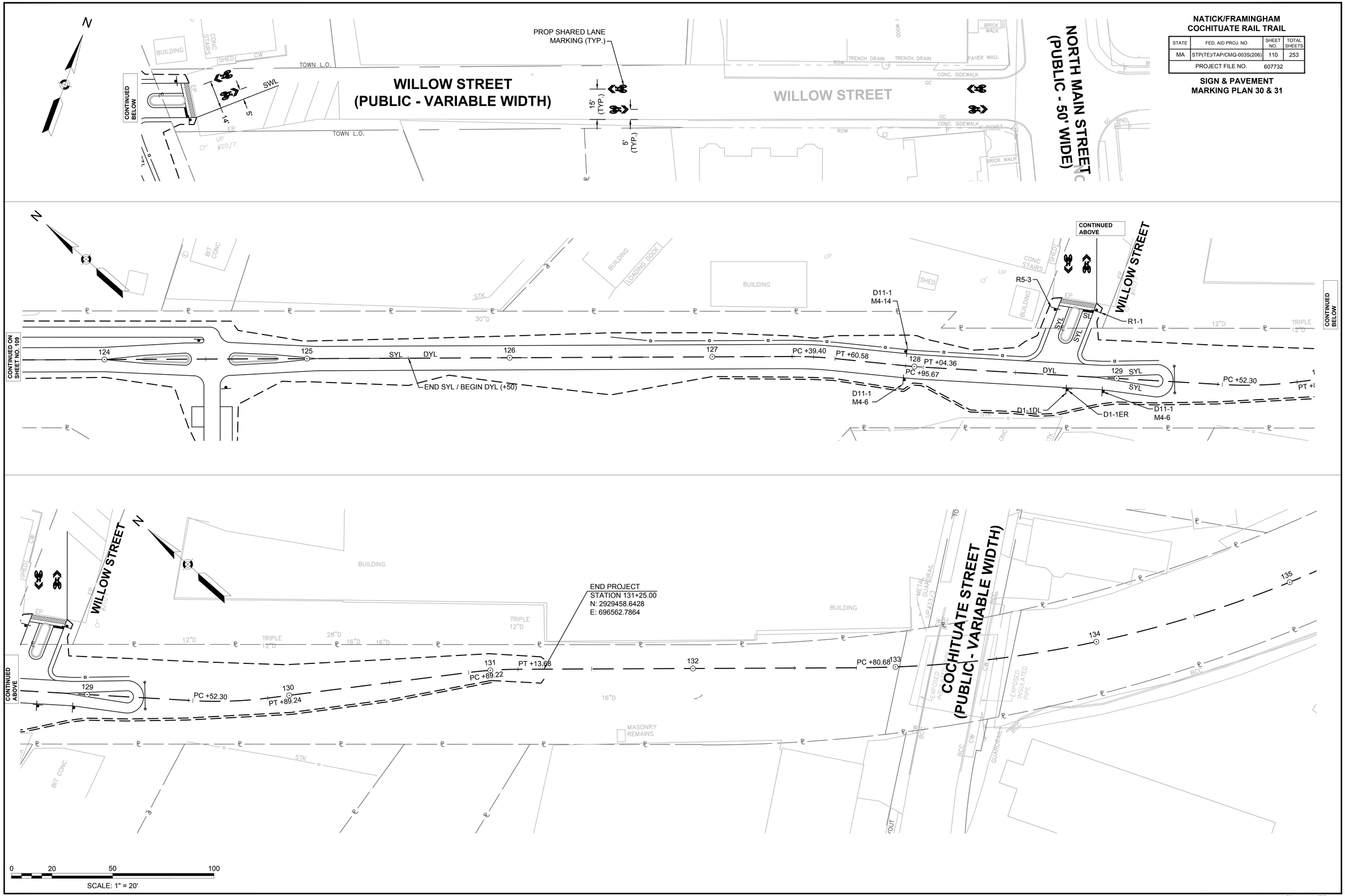

4576 SIGN & PVMT MKG PLANS.DWG Plotted on 20-Aug-2018 2:12 PM

MassDOT DWT Version: 3.1 July 2013

NATICK/FRAMINGHAM
COCHITUATE RAIL TRAIL

STATE	FED. AID PROJ. NO.	SHEET NO.	TOTAL SHEETS
MA	STP(TE)/TAP/CMQ-003S(206)	111	253
PROJECT FILE NO.	607732		

SIGN SUMMARY

TRAFFIC SIGN SUMMARY

IDENTIFICATION NUMBER	SIZE OF SIGN		TEXT	TEXT DIMENSIONS (INCHES)			NUMBER OF SIGNS REQUIRED	COLOR			POST SIZE AND NUMBER REQUIRED	UNIT AREA (S.F.)	AREA IN SQUARE FEET
	WIDTH	HEIGHT		LETTER HEIGHT	VERTICAL SPACING	ARROW RTE. MKR.		BACK-GROUND	LEGEND	BORDER			
R1-1 (SHARED - USE)	18"	18"	STOP	6C	6 6	N/A	9	RED	WHITE	WHITE	P-5 9	2.25	20.25
R1-1 (ROADWAY)	30"	30"	STOP	10C	10 10	N/A	1	RED	WHITE	WHITE	P-5 1	6.25	6.25
R1-2	18"	18"	YIELD	1.5C	3	N/A	8	RED/ WHITE	RED/ WHITE	WHITE	P-5 8	2.25	18.0
R5-3	24"	24"	NO MOTOR VEHICLES	4C 4C 4B	3.5 2.5 2.5 3.5	N/A	19	WHITE	BLACK	BLACK	P-5 18 MOUNT 1 W/ R1-2	4	76.0
R6-5P	30"	30"		①	①	①	3	WHITE	BLACK	BLACK	MOUNT 3 W/ R1-2	6.25	18.75
R9-5	12"	18"	USE PED SIGNAL	2C 2C 2C	8 1 1 2		3	WHITE	BLACK	BLACK	P-5 3	1.5	4.5
R10-15B	30"	30"	TURNING VEHICLES TO	3D 3D 3D	①		1	YELLOW/ WHITE	BLACK	BLACK	P-5 1	6.25	6.25
W1-1R	18"	18"		①			1	YELLOW	BLACK	BLACK	P-5 1	2.25	2.25
W1-2L	18"	18"					1	YELLOW	BLACK	BLACK	P-5 1	2.25	2.25
W1-3L	18"	18"					3	YELLOW	BLACK	BLACK	P-5 3	2.25	6.75
W1-3R	18"	18"					1	YELLOW	BLACK	BLACK	P-5 1	2.25	2.25
W1-4L	18"	18"					2	YELLOW	BLACK	BLACK	P-5 2	2.25	4.5
W2-1	18"	18"					4	YELLOW	BLACK	BLACK	P-5 4	2.25	9.0
W3-1	18"	18"					6	YELLOW	BLACK	BLACK	P-5 6	2.25	13.5
W3-2	18"	18"					3	YELLOW	BLACK	BLACK	P-5 3	2.25	6.75
W11-15	30"	30"					7	YELLOW	BLACK	BLACK	P-5 6	6.25	43.75
W8-6	18"	18"	TRUCK CROSSING	3C 3C	7.1 2 9.1	N/A	3	YELLOW	BLACK	BLACK	P-5 3	2.25	6.75
W11-15P	24"	18"	TRAIL X-ING	4D 4D	3.5 3 3.5	N/A	7	YELLOW	BLACK	BLACK	MOUNT 7 W/ W11-15	3.0	21.0

SEE 2009 MUTCD STANDARDS

SEE 2009 MUTCD STANDARDS

SEE 2009 MUTCD STANDARDS

IDENTIFICATION NUMBER	SIZE OF SIGN		TEXT	TEXT DIMENSIONS (INCHES)			NUMBER OF SIGNS REQUIRED	COLOR			POST SIZE AND NUMBER REQUIRED	UNIT AREA (S.F.)	AREA IN SQUARE FEET
	WIDTH	HEIGHT		LETTER HEIGHT	VERTICAL SPACING	ARROW RTE. MKR.		BACK-GROUND	LEGEND	BORDER			
W16-7PL	24"	12"		①	①	①	4	YELLOW	BLACK	BLACK	MOUNT 4 W/ W11-15	2	8
W16-9P	24"	12"	AHEAD	5C	3.5 3.5		3	YELLOW	BLACK	BLACK	MOUNT 3 W/ W11-15	2	6
D1-1L	27"	6"	← Speen St	3D/2D	1.375 1.625	ARROW 3X2@180°	1	GREEN	WHITE	WHITE	P-5 1	1.125	1.125
D1-1R	27"	6"	Speen St →	3D/2D	1.375 1.625	ARROW 3X2@0°	1	GREEN	WHITE	WHITE	P-5 1	1.125	1.125
D1-1DL	39"	6"	← Natick Center	3D/2D	1.5 1.5	ARROW 3X2@180°	1	GREEN	WHITE	WHITE	P-5 1	1.625	1.625
D1-1ER	36"	6"	Framingham →	3D/2D	1.375 1.625	ARROW 3X2@0°	1	GREEN	WHITE	WHITE	P-5 1	1.5	1.5
D1-4	39"	12"	← Framingham Natick Center →	3D 3D	1.375 1.625 1.5 1.5	ARROW 3X2@180° ARROW 3X2@0°	1	GREEN	WHITE	WHITE	P-5 1	3.25	3.25
D1-5	39"	12"	← Natick Center Framingham →	3D 3D	1.5 1.5 1.375 1.625	ARROW 3X2@180° ARROW 3X2@0°	4	GREEN	WHITE	WHITE	P-5 4	3.25	13.0
D3-1	24"	6"	Fisher St	3D/2D	1.5 1.5		2	GREEN	WHITE	WHITE	P-5 2	1.0	2.0
D3-2	27"	6"	Chrysler Rd	3D/2D	1.375 1.625		1	GREEN	WHITE	WHITE	P-5 1	1.125	1.125
D11-1	24"	18"	BIKE ROUTE	①	①	①	6	GREEN	WHITE	WHITE	P-5 6	3	18
M4-6	12"	6"	END	3D	1.5 1.5	N/A	3	GREEN	WHITE	WHITE	MOUNT 3 W/ D11-1	0.5	1.5
M4-14	12"	6"	BEGIN	2.5D	1.75 1.75	N/A	2	GREEN	WHITE	WHITE	MOUNT 2 W/ D11-1	0.5	1
M6-1R	12"	9"		①	①	①	2	GREEN	WHITE	WHITE	MOUNT 2 W/ D11-1	0.75	1.50

NOTES:

1. HIGH INTENSITY ENCAPSULATED LENS REFLECTIVE SHEETING SHALL BE USED FOR ALL SIGNS. THE 2009 "MANUAL ON UNIFORM TRAFFIC CONTROL DEVICES", THE 1990 MDPW "STANDARD DRAWINGS FOR SIGNS AND SUPPORTS", AND ALL AMENDMENTS WILL GOVERN.
2. ALL STOP AND YIELD SIGNS PROPOSED IN THIS CONTRACT ARE SUBJECT TO FIELD INVESTIGATION BY THE DISTRICT OFFICE OF THE MASSACHUSETTS DEPARTMENT OF PUBLIC WORKS TO JUSTIFY WARRANTS BEFORE INSTALLATION. NUMERICAL LIMITS AND JUSTIFICATION FOR SPEED & ADVISORY EXIT SPEED SIGNS SHALL BE OBTAINED FROM THE SPEED ZONING UNIT OF THE TRAFFIC ENGINEERING SECTION, MASSACHUSETTS DEPARTMENT OF PUBLIC WORKS, BEFORE FABRICATION AND/OR ERECTION.

① SEE THE CURRENT "MANUAL ON UNIFORM TRAFFIC CONTROL DEVICES" AND "STANDARD HIGHWAY SIGNS" FOR THE LATEST SPECIFICATIONS ON TEXT DIMENSIONS AND COLOR. (ALSO SEE SECTION M9.30.0 TYPE III MHD STANDARD SPECIFICATION, THE "MASSACHUSETTS MANUAL OF UNIFORM TRAFFIC CONTROL DEVICES," AND "GUIDE SIGN POLICY FOR SECONDARY STATE HIGHWAYS" (LATEST EDITIONS) BY THE MASSACHUSETTS HIGHWAY DEPARTMENT).

4576 SIGN SUMMARY.DWG Plotted on 20-Aug-2018 2:13 PM

NATICK/FRAMINGHAM
COCHITUATE RAIL TRAIL

STATE	FED. AID PROJ. NO.	SHEET NO.	TOTAL SHEETS
MA	STP(TE)/TAP/CMQ-003S(206)	112	253
PROJECT FILE NO.	607732		

TRAFFIC SIGNAL PLAN

NOTES:

1. **WORK AT THIS INTERSECTION IS LIMITED TO PEDESTRIAN SIGNALS, PUSHBUTTONS, AND POSTS.**
2. **ALL EXISTING EQUIPMENT SHALL BE RETAINED UNLESS OTHERWISE NOTED.**
3. **SEE SHEET 14 FOR INTERSECTION IMPROVEMENTS.**

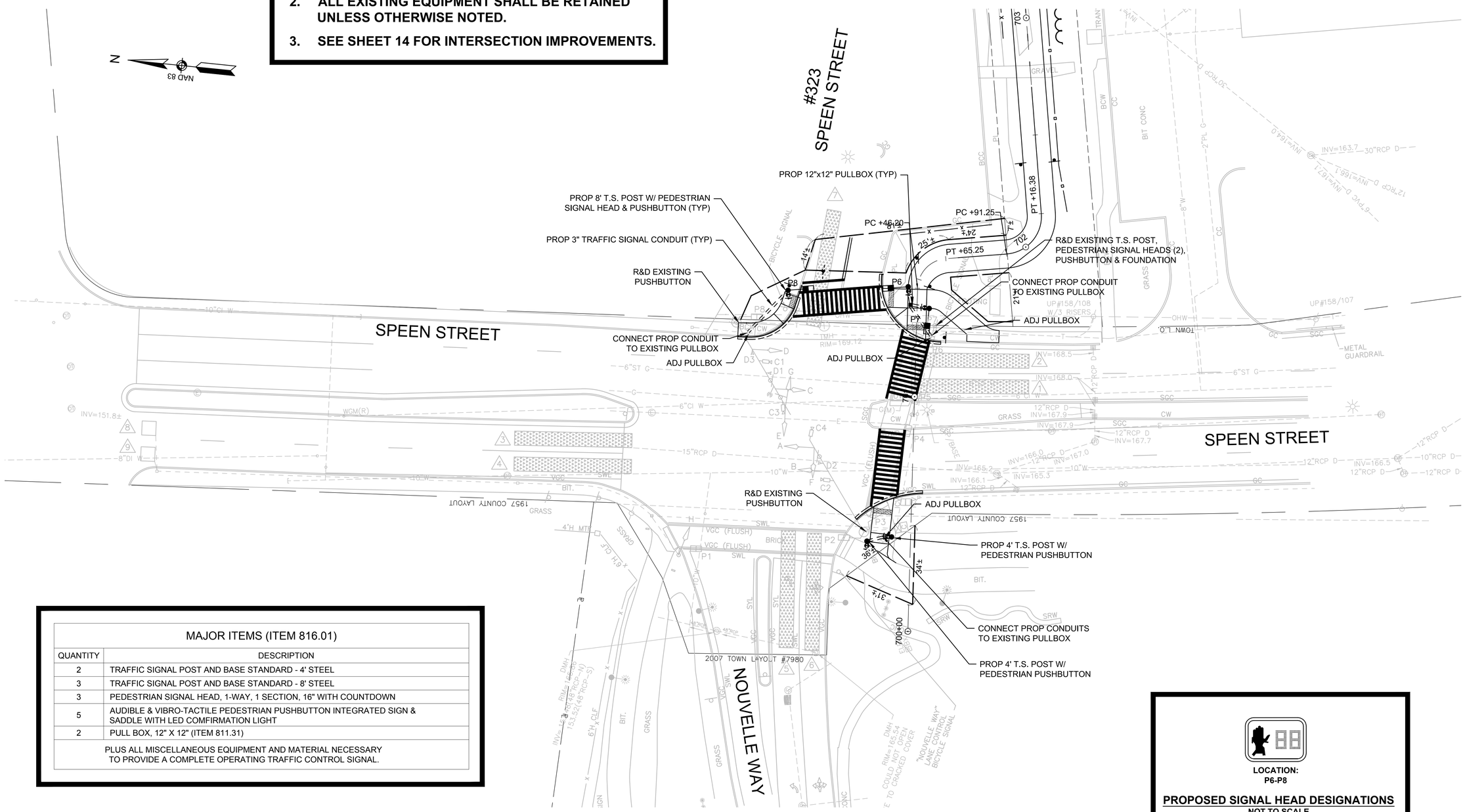

MAJOR ITEMS (ITEM 816.01)	
QUANTITY	DESCRIPTION
2	TRAFFIC SIGNAL POST AND BASE STANDARD - 4' STEEL
3	TRAFFIC SIGNAL POST AND BASE STANDARD - 8' STEEL
3	PEDESTRIAN SIGNAL HEAD, 1-WAY, 1 SECTION, 16" WITH COUNTDOWN
5	AUDIBLE & VIBRO-TACTILE PEDESTRIAN PUSHBUTTON INTEGRATED SIGN & SADDLE WITH LED COMFIRMATION LIGHT
2	PULL BOX, 12" X 12" (ITEM 811.31)
PLUS ALL MISCELLANEOUS EQUIPMENT AND MATERIAL NECESSARY TO PROVIDE A COMPLETE OPERATING TRAFFIC CONTROL SIGNAL.	

LOCATION:
P6-P8

PROPOSED SIGNAL HEAD DESIGNATIONS
NOT TO SCALE

SIGNAL HEAD NOTES

1. **ALL PEDESTRIAN SIGNAL HEADS SHALL DISPLAY INTERNATIONAL SYMBOLS - (HAND)/(PERSON WALKING) WITH COUNTDOWN DISPLAYS.**
2. **ALL PEDESTRIAN SIGNAL HEADS SHALL HAVE 16" LED LENSES AND SUN VISORS.**

4576 SIGNAL PLAN.DWG Plotted on 20-Aug-2018 2:13 PM

NATICK/FRAMINGHAM
COCHITUATE RAIL TRAIL

STATE	FED. AID PROJ. NO.	SHEET NO.	TOTAL SHEETS
MA	STP(TE)/TAP/CMQ-003S(206)	113	253
PROJECT FILE NO.	607732		

TRAFFIC SIGNAL PLAN

4576 SIGNAL PLAN.DWG Plotted on 20-Aug-2018 2:13 PM

SEQUENCE AND TIMING

APPROACH	DIRECTION	HOUSING	1	2	3	4	5	6	7	8	9	10	11	12	13	14	15	FLASHING OPERATION
MINIMUM INTERVAL			10			4			4			10						
VEHICLE EXTENSION			3			3			3			3						
MAXIMUM 1			45			25			15			45						
MAXIMUM 2			–			–			–			–						
YELLOW CLEARANCE				4			3			3			4					
RED CLEARANCE					2			3			2			2			4	
PEDESTRIAN INTERVAL															7	21		
SPEEN STREET	SB	A	R	R	R	R	R	R	R	R	R	G	Y	R	R	R	R	FY
SPEEN STREET	SB	B	R	R	R	R	R	R	R	R	R	G	Y	R	R	R	R	FY
SPEEN STREET	NB	C	G	Y	R	R	R	R	R	R	R	R	R	R	R	R	R	FY
SPEEN STREET	NB	D	G	Y	R	R	R	R	R	R	R	R	R	R	R	R	R	FY
PROP CONN. ROAD	EB	E	R	R	R	G	Y	R	R	R	R	R	R	R	R	R	R	FR
PROP CONN. ROAD	EB	F	R	R	R	G	Y	R	R	R	R	R	R	R	R	R	R	FR
IN-HOME FURNISHINGS	WB	G	R	R	R	R	R	R	G	Y	R	R	R	R	R	R	R	FR
IN-HOME FURNISHINGS	WB	H	R	R	R	R	R	R	G	Y	R	R	R	R	R	R	R	FR
PEDESTRIAN X-ING	NB-SB	P1-P2	DW	DW	DW	DW	DW	DW	DW	DW	DW	DW	DW	DW	W	FDW	DW	OUT
PEDESTRIAN X-ING	EB-WB	P3-P6	DW	DW	DW	DW	DW	DW	DW	DW	DW	DW	DW	DW	W	FDW	DW	OUT
PEDESTRIAN X-ING	NB-SB	P7-P8	DW	DW	DW	DW	DW	DW	DW	DW	DW	DW	DW	DW	W	FDW	DW	OUT
DETECTOR			NON-LOCK			NON-LOCK			NON-LOCK			NON-LOCK			–			
RECALL			SOFT			OFF			OFF			SOFT			OFF			
			ø2			ø3			ø4			ø6			ø9*			ø1,ø5ø7&ø8
																		NOT USED

NOTES:
1. AUTOMATIC FLASHING OPERATION PER M.U.T.C.D. SECTION 4D.12.
2. * UPON PEDESTRIAN PUSH BUTTON ACTUATION
3. MAXIMUM 1 = NORMAL OPERATION
4. MAXIMUM 2 = NOT USED
5. STOP AND GO OPERATION FOR 24 HOURS PER DAY. FLASHING OPERATION FOR EMERGENCY ONLY.
6. DURING PEDESTRIAN INTERVAL, FDW THROUGH YELLOW OPERATION SHALL BE IN EFFECT.
7. INHIBIT MAX TERMINATION SHALL BE IN EFFECT DURING COORDINATION.
8. SEE SHEET 77 FOR COORDINATION DATA.

SEQUENCE & TIMING NOTES:
1. IF THE ASSIGNED RIGHT OF WAY FOR ANY TRAFFIC MOVEMENT IS TO REMAIN IN EFFECT DURING THE NEXT CALLED PHASE, THE SIGNAL INDICATIONS FOR THAT TRAFFIC MOVEMENT WILL NOT CHANGE DURING THE CLEARANCE INTERVAL.
2. THE RIGHT OF WAY MAY BE ASSIGNED TO ANY PHASE OR ANY COMBINATION OF NON-CONFLICTING PHASES.
3. IF CALLS EXIST ON ALL PHASES, THE ASSIGNMENT OF RIGHT OF WAY SHALL BE IN ACCORDANCE WITH THE PREFERENTIAL PHASE SEQUENCE.
4. IF THE ASSIGNED RIGHT OF WAY FOR ANY TRAFFIC MOVEMENT IS TO CHANGE DURING THE NEXT CALLED PHASE, THE SIGNAL INDICATION FOR THAT MOVEMENT WILL DISPLAY THE APPROPRIATE CLEARANCE INTERVALS.

NOTE: THIS PLAN IS NOT DESIGNED BY BETA GROUP, INC. IT WAS PROVIDED BY THE MASSDOT AND ALL INFORMATION IS ASSUMED TO BE CORRECT.

PRE-EMPTION PHASING & PRIORITY

DETECTOR & PRIORITY	PRE-EMPT PHASE ASSIGNMENT	MOVEMENT	VEHICLE PHASE ASSIGNMENT
D1	1		ø2
D2	2		ø6
D3	3		ø4

EMERGENCY VEHICLE PRE-EMPTION OPERATION.
1. EMERGENCY VEHICLE PRE-EMPTION SIGNALS SHALL BE OPTICALLY TRANSMITTED BY OPTICAL EMITTERS MOUNTED IN EMERGENCY VEHICLES AND RECEIVED BY OPTICAL DETECTORS LOCATED AT EACH INTERSECTION.
2. PRE-EMPTION SIGNALS SHALL BE SERVICED ON A PRIORITY BASIS WITH DETECTORS D1, D2 OR D3 ASSIGNED DESCENDING PRIORITIES AS FOLLOWS: (D1 HIGHEST AND D3 LOWEST)
3. IN RESPONSE TO A PRE-EMPTION SIGNAL RECEIVED AT AN INTERSECTION BY OPTICAL DETECTOR D1 (OR D2, D3) THE CONTROLLER SHALL HOLD OR ADVANCE TO AND HOLD IN EMERGENCY VEHICLE PRE-EMPTION PHASE #1 (OR #2, #3) GREEN FOR A MINIMUM OF TEN (10) SECONDS OR UNTIL PRE-EMPTION SIGNAL CEASES. THE CONTROLLER SHALL THEN TIME PRE-EMPTION PHASE CLEARANCES FOR THE ASSOCIATED PHASE(S) AS SHOWN IN THE SEQUENCE AND TIMING CHART AND SERVICE SUBSEQUENT EMERGENCY VEHICLE PRE-EMPTION PHASES AS NECESSARY.
4. MINIMUM GREEN AND NORMAL VEHICLE CLEARANCE SHALL BE PROVIDED ON PHASES THAT ARE TO BE TERMINATED BY PRE-EMPTION DEMAND.
5. PRE-EMPTION STROBE SHALL BE ILLUMINATED WHENEVER ANY EMERGENCY VEHICLE PRE-EMPTION GREEN IS ON.
6. EMERGENCY VEHICLE PRE-EMPTION SHALL OVERRIDE COORDINATION AND QUEUE PRE-EMPTION.

PREFERENTIAL PHASE SEQUENCE

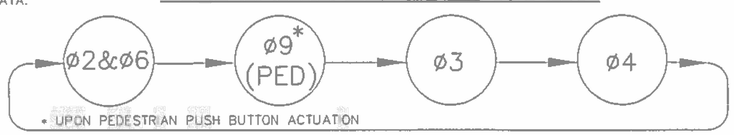

SIGNAL HEAD DATA

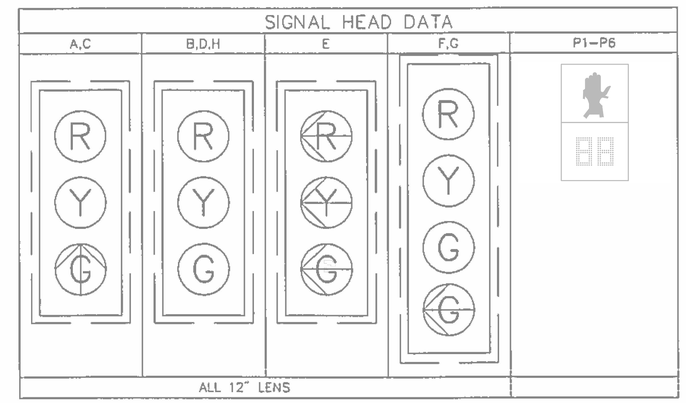

NOTES: 1. ALL SIGNAL HEADS SHALL BE RIGID MOUNTED AND EQUIPPED WITH 5"± LOUVERED BACKPLATES.
2. ALL SIGNAL DISPLAYS SHALL BE EQUIPPED W/L.E.D. MODULES.

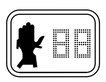

LOCATION:
P6-P8

PROPOSED SIGNAL HEAD DESIGNATIONS
NOT TO SCALE

SIGNAL HEAD NOTES
1. ALL PEDESTRIAN SIGNAL HEADS SHALL DISPLAY INTERNATIONAL SYMBOLS - (HAND)/(PERSON WALKING) WITH COUNTDOWN DISPLAYS.
2. ALL PEDESTRIAN SIGNAL HEADS SHALL HAVE 16" LED LENSES AND SUN VISORS.

VIDEO DETECTION DATA

DETECTOR NO.	ZONE SIZE	CAMERA	DELAY /EXT	CALL PHASE
1	TO BE FIELD ADJUSTED	C1	0	ø2
2	TO BE FIELD ADJUSTED	C1	0	ø2
3	TO BE FIELD ADJUSTED	C2	0	ø6
4	TO BE FIELD ADJUSTED	C2	0	ø6
5	TO BE FIELD ADJUSTED	C3	0	ø3
6	TO BE FIELD ADJUSTED	C3	0	ø3
7	TO BE FIELD ADJUSTED	C4	0	ø4

NOTE: DELAY AND EXTENSION TIMINGS SHALL BE PROGRAMMED IN THE CONTROLLER ONLY

WIRE LOOP DETECTOR DATA

DETECTOR NO.	NO. SECTION/ SIZE	NO. OF TURNS	OPERATIONS	DELAY /EXT	CALL PHASE	LOOP CONNECTION
8	1-6'X6'	3	PRESENCE	10 SEC DELAY	QUEUE	SINGLE
9	1-6'X6'	3	PRESENCE	10 SEC DELAY	QUEUE	SINGLE

NOTE: DELAY AND EXTENSION TIMINGS SHALL BE PROGRAMMED IN THE CONTROLLER ONLY

QUEUE DETECTOR OPERATION:
1. A QUEUE PRE-EMPT CALL SHALL BE PLACED INTO THE CONTROLLER AFTER THE DELAY TIME ON DETECTORS 8&9 HA' TIMED OUT. (INITIALLY SET AT 10 SECONDS)
2. THIS QUEUE PRE-EMPT SHALL CAUSE THE CONTROLLER TO FORCE OFF PHASES CURRENTLY IN OPERATION AND SERVICE PHASE 2&6
3. QUEUE PRE-EMPT DURATION SHALL INITIALLY BE SET FOR 15 SECONDS.
4. UPON TERMINATION OF QUEUE PRE-EMPTION, THE CONTROLLER SHALL RETURN TO NORMAL OPERATION BY SERVICING PHASES 2 AND 6.
5. THE CONTROLLER SHALL BE INITIALLY PROGRAMMED TO PROVIDE A MINIMUM RESERVICE TIME FOR QUEUE PRE-EMPT OF 4 MINUTES.
6. EMERGENCY VEHICLE PRE-EMPTION SHALL OVERRIDE QUEUE DETECTION PRE-EMPTION.
7. THE QUEUE PRE-EMPTION SHALL OVERIDE COORDINATION.

NATICK/FRAMINGHAM COCHITUATE RAIL TRAIL

STATE	FED. AID PROJ. NO.	SHEET NO.	TOTAL SHEETS
MA	STP(TE)/TAP/CMQ-003S(206)	114	253
PROJECT FILE NO.	607732		

TEMPORARY TRAFFIC CONTROL PLAN

NOTES:

1. ALL TEMPORARY TRAFFIC CONTROL WORK SHALL CONFORM TO THE 2009 EDITION OF THE "MANUAL ON UNIFORM TRAFFIC CONTROL DEVICES" (MUTCD) AND ALL REVISIONS.
2. ALL SIGN LEGENDS, BORDERS AND MOUNTING SHALL BE IN ACCORDANCE WITH THE MUTCD, EXCEPT THAT BACKGROUND COLOR SHALL BE FLUORESCENT ORANGE, IN ACCORDANCE WITH MASSDOT SPECIFICATIONS.
3. TEMPORARY CONSTRUCTION SIGNING AND ALL OTHER TRAFFIC CONTROL DEVICES SHALL BE IN PLACE PRIOR TO THE START OF ANY WORK.
4. TEMPORARY CONSTRUCTION SIGNING, BARRICADES AND ALL OTHER NECESSARY WORK ZONE TRAFFIC CONTROL DEVICES SHALL BE REMOVED FROM THE HIGHWAY OR COVERED WHEN THEY ARE NOT REQUIRED FOR CONTROL OF TRAFFIC.
5. SIGNS AND SIGN SUPPORTS LOCATED ON OR NEAR THE TRAVELED WAY, AND REFLECTORIZED PLASTIC DRUMS WITH LIGHTING DEVICES MOUNTED ON THEM, MUST PASS THE CRITERIA SET FORTH IN NCHRP REPORT 350, "RECOMMENDED PROCEDURES FOR THE SAFETY PERFORMANCE EVALUATION OF HIGHWAY FEATURES" AND/OR "MANUAL FOR ASSESSING SAFETY HARDWARE" (MASH).
6. CONTRACTORS SHALL NOTIFY EACH ABUTTER AT LEAST 24 HOURS IN ADVANCE OF THE START OF ANY WORK THAT WILL REQUIRE THE TEMPORARY CLOSURE OF ACCESS, SUCH AS CONDUIT INSTALLATION, EXISTING PAVEMENT EXCAVATION, TEMPORARY DRIVEWAY PAVEMENT PLACEMENT AND SIMILAR OPERATIONS.
7. THE FIRST TEN REFLECTORIZED PLASTIC DRUMS OF A TAPER SHALL BE MOUNTED WITH SEQUENTIAL FLASHING LIGHTS.
8. THE ADVISORY SPEED LIMIT, IF REQUIRED, SHALL BE DETERMINED BY THE ENGINEER.
9. DISTANCES ARE A GUIDE AND MAY BE ADJUSTED IN THE FIELD BY THE ENGINEER.
10. MAXIMUM SPACING OF TRAFFIC DEVICES IN A TAPER (DRUMS OR CONES) IS EQUAL IN FEET TO THE SPEED LIMIT IN MPH.
11. MINIMUM LANE WIDTH IS TO BE 11 FEET UNLESS OTHERWISE SHOWN. MINIMUM LANE WIDTH TO BE MEASURED FROM THE EDGE OF DRUMS OR MEDIAN BARRIER.
12. ALL SIGNS SHALL BE MOUNTED ON THEIR OWN STANDARD SIGN SUPPORTS.
13. TEMPORARY CONSTRUCTION SIGNING AND ALL OTHER NECESSARY WORK ZONE TRAFFIC CONTROL NOT COVERED IN THE PLAN SHALL REFER TO MASSDOT "STANDARD DETAILS AND DRAWINGS FOR THE DEVELOPMENT OF TRAFFIC MANAGEMENT PLANS".

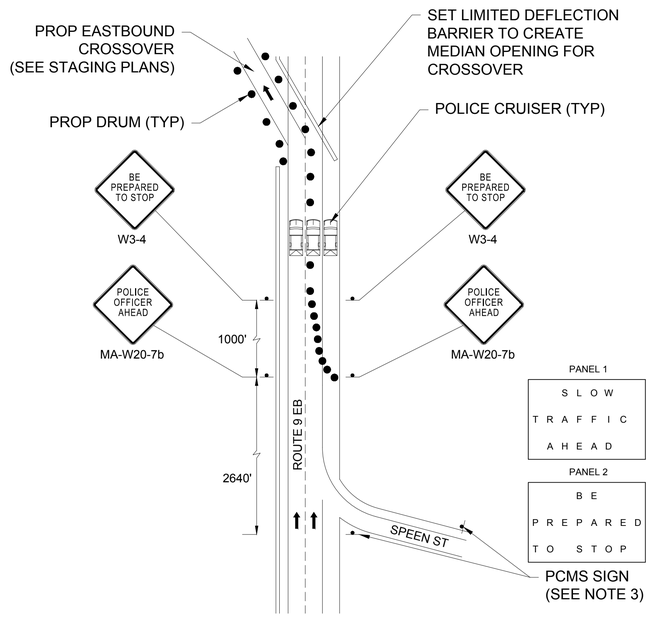

FULL CLOSURE DETAIL FOR CROSSOVER IMPLEMENTATION
ROUTE 9 EASTBOUND - STAGES 2B & 5B
NOT TO SCALE

NOTES:
1. ALL TRAFFIC MANAGEMENT SIGNS SHALL BE PLACED ON BOTH SIDE OF THE ROADWAY.
2. PROVIDE ONE POLICE CRUISER PER LANE INCLUDING DRIVABLE SHOULDERS.
3. PCMS SIGNS TO BE INSTALLED ON ROUTE 9 EASTBOUND AND THE SPEEN STREET ON-RAMP TO ROUTE 9 EASTBOUND
4. REFER TO SHEETS 120-121 FOR FULL DETAILS OF EASTBOUND CROSSOVER.

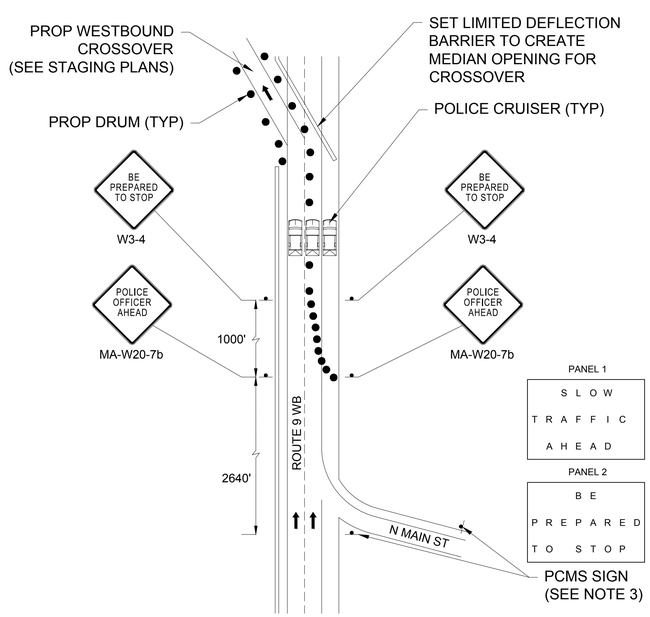

FULL CLOSURE DETAIL FOR CROSSOVER IMPLEMENTATION
ROUTE 9 WESTBOUND - STAGES 2C & 5C
NOT TO SCALE

NOTES:
1. ALL TRAFFIC MANAGEMENT SIGNS SHALL BE PLACED ON BOTH SIDE OF THE ROADWAY.
2. PROVIDE ONE POLICE CRUISER PER LANE INCLUDING DRIVABLE SHOULDERS.
3. PCMS SIGNS TO BE INSTALLED ON ROUTE 9 WESTBOUND AND THE NORTH MAIN STREET ON-RAMP TO ROUTE 9 WESTBOUND
4. REFER TO SHEETS 122-123 FOR FULL DETAILS OF WESTBOUND CROSSOVER.

LEGEND:

- ● REFLECTORIZED PLASTIC DRUM
- ✖ TRAFFIC CONE
- TYPE III BARRICADE
- FLASHING ARROW PANNEL
- FLASHING ARROW PANNEL
- WORK ZONE
- DIRECTION OF TRAFFIC
- IMPACT ATTENUATOR
- MEDIAN BARRIER
- MEDIAN BARRIER WITH WARNING LIGHTS
- TRUCK MOUNTED ATTENUATOR
- TRAFFIC OR PEDESTRIAN SIGNAL
- SIGN
- P POLICE DETAIL
- F FLAGGER

TAPER LENGTH

SPEED LIMIT	FORMULA
40 MPH or Less	$L=WS^2/60$
45 MPH or Greater	L=W x S

L = TAPER LENGTH IN FEET
W = WIDTH OF OFFSET IN FEET
S = POSTED SPEED IN MPH

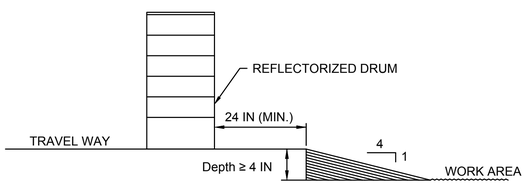

LATERAL DROP-OFF DETAIL
NOT TO SCALE

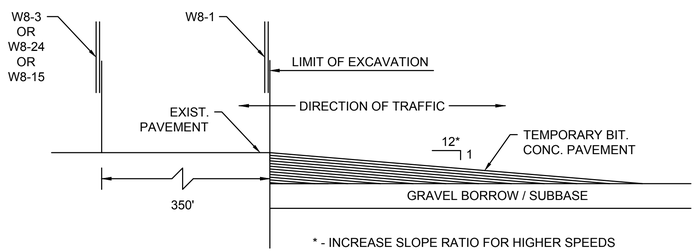

* - INCREASE SLOPE RATIO FOR HIGHER SPEEDS

LONGITUDINAL DROP-OFF DETAIL
NOT TO SCALE

4576 TTCP 1-3.DWG Plotted on 20-Aug-2018 2:13 PM

4576 TTCP 1-3.DWG Plotted on 20-Aug-2018 2:13 PM

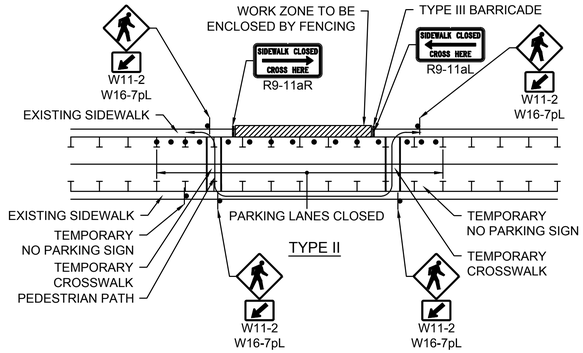

NOTES:

1. ADDITIONAL ADVANCE WARNING MAY BE NECESSARY.
2. CONTROLS ONLY FOR PEDESTRIAN TRAFFIC ARE SHOWN. VEHICULAR TRAFFIC SHOULD BE HANDLED AS SHOWN ELSEWHERE.
3. STREET LIGHTING SHOULD BE CONSIDERED WHEN LOCATING CONTROL DEVICES.
4. IF THE WORK ZONE DOES NOT PERMIT PEDESTRIANS TO TRAVEL ADJACENT TO IT, TEMPORARY CROSSWALKS WITH APPROPRIATE SIGNS SHOULD BE INSTALLED TO CROSS PEDESTRIANS TO THE OPPOSITE SIDE OF THE STREET AS SHOWN IN PEDESTRIAN BYPASS, AND AS DIRECTED BY THE ENGINEER. TEMPORARY CURB RAMPS WILL BE REQUIRED AT ALL TEMPORARY CROSSWALK LOCATIONS.
5. BYPASS IS TO BE USED IN CONJUCTION WITH THE PROPOSED LANE CLOSURE DETAILS AND DURING CONSTRUCTION STAGING, AS DIRECTED BY THE ENGINEER.
6. THE TEMPORARY SIDEWALK SHOULD BE A MINIMUM OF 4 FEET WIDE. IF THIS WALKWAY EXCEEDS 200 FEET THEN A 5 FOOT X 5 FOOT PASSING ZONE. (FOR SHORT TERM SETUPS < 10 HOURS, THIS CONDITION MAY BE WAIVED. A NOTE WOULD NEED TO BE INCLUDED IN THE TTCP THAT STATES HOW THE CONTRACTOR SHOULD ADDRESS THIS ISSUE.)

ROUTE 30 PEDESTRIAN BYPASS DETAILS
NOT TO SCALE

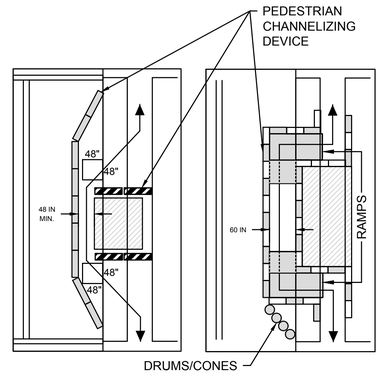

ROUTE 30 PEDESTRIAN BYPASS NOTES:

- DETAIL I IS CONSIDERED AN EXAMPLE OF A SHORT TERM CLOSURE AND PEDESTRIAN ASSISTANCE (PERSONEL) TO NAVIGATE AROUND THE CLOSURE/WORK AREA COULD BE CONSIDERED AS AN OPTION IN PLACE OF PROVIDING ADA/AAB DEVICES. DETAIL II IS CONSIDERED AN EXAMPLE OF A LONG TERM CLOSURE THAT WOULD REQUIRE ADDITIONAL ADA/AAB COMPLIANT DEVICES. IF A SIDEWALK CLOSURE OR RESTRICTION LASTS FOR MORE THAN ONE (1) WORK SHIFT THEN ADA/AAB COMPLIANCE SHALL BE FOLLOWED.
- WHEN EXISTING PEDESTRIAN FACILITIES ARE DISRUPTED, CLOSED, OR RELOCATED IN A TTC ZONE, TEMPORARY FACILITIES SHALL BE PROVIDED AND THEY SHALL BE DETECTABLE AND INCLUDE ACCESSIBILITY FEATURES CONSISTENT WITH THE FEATURES PRESENT IN THE EXISTING PEDESTRIAN FACILITY.
- A PEDESTRIAN CHANNELIZING DEVICE THAT IS DETECTABLE BY A PERSON WITH A VISUAL DISABILITY TRAVELING WITH THE AID OF A LONG CANE SHALL BE PLACED ACROSS THE FULL WIDTH OF THE CLOSED SIDEWALK.
- WHEN USED, TEMPORARY RAMPS SHALL COMPLY WITH AMERICANS WITH DISABILITIES ACT (SEE FIGURES).
- THE ALTERNATE PATHWAY SHOULD HAVE A SMOOTH CONTINUOUS HARD SURFACE FOR THE ENTIRE LENGTH OF THE TEMPORARY PEDESTRIAN FACILITY.
- THE TEMPORARY SIDEWALK SHOULD BE A MINIMUM OF 4 FEET WIDE. IF THE SIDEWALK EXEEDS 200 FEET THEN A 5 FOOT BE 5 FOOT PASSING ZONE SHALL BE PROVIDED.
- THE PROTECTIVE REQUIREMENTS OF A TTC WORK ZONE MAY HAVE AN IMPACT IN DETERMINING THE NEED FOR TEMPORARY TRAFFIC BARRIERS AND THEIR USE IN PROVIDING PEDESTRIAN DELINEATION SHOULD BE BASED ON ENGINEERING JUDGMENT .
- CONTROLS ONLY FOR PEDESTRIAN TRAFFIC ARE SHOWN; VEHICULAR TRAFFIC SHOULD BE HANDLED AS SHOWN ELSEWHERE. THESE DETAILS ARE USED IN CONJUNCTION WITH THE PROPOSED LANE CLOSURE DETAILS AND DURING CONSTRUCTION STAGING, AS DETERMINED BY THE ENGINEER.
- AUDIBLE INFORMATION DEVICES SHOULD BE CONSIDERED WHERE MIDBLOCK CLOSINGS AND CHANGED CROSSWALK AREAS CAUSE INADEQUATE COMMUNICATION TO BE PROVIDED TO PEDESTRIANS WHO HAVE VISUAL DISABILITIES.
- EXISTING AUDIBLE DEVICES NO LONGER APPLICABLE DUE TO CONSTRUCTION SHALL BE DISABLED.

AUDIBLE DEVICES:

- FOR LONG TERM SIDEWALK CLOSURES (AT A MINIMUM OVERNIGHT) A FORM OF SPEECH MESSAGING FOR PEDESTRIANS WITH VISUAL DISABILITIES SHALL BE PROVIDED. AUDIBLE INFORMATION DEVICES SUCH AS DETECTABLE BARRIERS OR BARRICADES AND OTHER PASSIVE PEDESTRIAN ACTIVATION (MOTION ACTIVATED) DEVICES SHOULD BE CONSIDERED FOR THESE CASES. THESE AUDIBLE DEVICES CAN BE MOUNTABLE OR STAND ALONE.

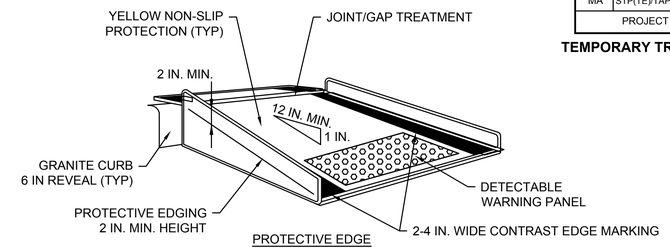

TEMPORARY CURB RAMP-PERPENDICULAR TO CURB
NOT TO SCALE

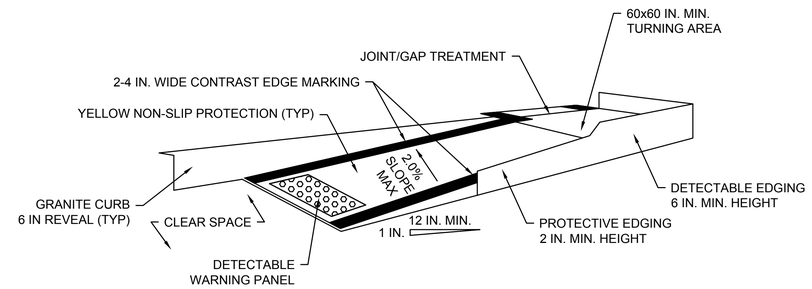

TEMPORARY CURB RAMP-PARALLEL TO CURB
NOT TO SCALE

NOTES:

1. CURB RAMPS SHALL BE 60 IN. MINIMUM WIDTH WITH A FIRM, STABLE AND NON-SLIP SURFACE.
2. PROTECTIVE EDGING WITH A 2 IN. MINIMUM HEIGHT SHALL BE INSTALLED WHEN THE CURB RAMP OR LANDING PLATFORM HAS A VERTICAL DROP OF 6 IN. OR GREATER OR HAS A SIDE APRON SLOP STEEPER THAN 1:3 (33%). PROTECTIVE EDGING SHOULD BE CONSIDERED WHEN THE CURB RAMPS OR LANDING PLATFORMS HAVE A VERTICAL DROP OF 3 IN. OR MORE.
3. DETECTABLE EDGING WITH 6 IN. MINIMUM HEIGHT AND CONTRASTING COLOR SHALL BE INSTALLED ON ALL CURB RAMP LANDINGS WHERE THE WALKWAY CHANGES DIRECTION (TURNS).
4. THE CURB RAMP WALKWAY AND LANDING AREA SURFACE SHALL BE OF A SOLID CONTINUOUS CONTRASTING COLOR ABUTTING UP TO THE EXISTING SIDEWALK.
5. CURB RAMPS AND LANDINGS SHOULD HAVE A 1:50 (2%) MAX CROSS-SLOPE.
6. CLEAR SPACE OF 48x48 IN. MINIMUM SHALL BE PROVIDED ABOVE AND BELOW THE CURB RAMP.
7. WATER FLOW IN THE GUTTER SYSTEM SHALL HAVE MINIMAL RESTRICTION.
8. LATERAL JOINTS OR GAPS BETWEEN SURFACES SHALL BE LESS THAN 0.5 IN. WIDTH.
9. CHANGES BETWEEN SURFACE HEIGHTS SHOULD NOT EXCEED 0.5 IN. LATERAL EDGES SHOULD BE VERTICAL UP TO 0.25 IN. HIGH, AND BEVELED AT 1:2 BETWEEN 0.25 IN. AND 0.5 IN. HEIGHT.
10. IF A TEMPORARY PEDESTRIAN RAMP LEADS TO A CROSSWALK, THEN A DETECTABLE WARNING PAD MUST BE ADHERED TO THE BASE OF THE RAMP. IF IT LEADS TO A PROTECTED PEDESTRIAN BYPASS THAT DOES NOT CONFLICT WITH VEHICULAR TRAFFIC, THEN A PAD SHALL NOT BE INSTALLED ON THE RAMP.

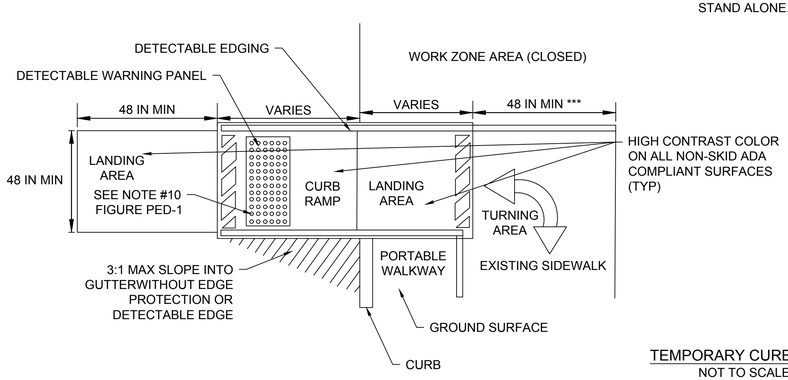

TEMPORARY CURB RAMP
NOT TO SCALE

* LANDING AREA USED TO OVERLAP NON-ADA COMPLIANT SURFACES.
** DETECTABLE EDGE REMOVED IF A CONTINUOUS SIDEWALK.
*** 60 IN. IF AN OBSTRUCTION IS AT BACK OF SIDEWALK

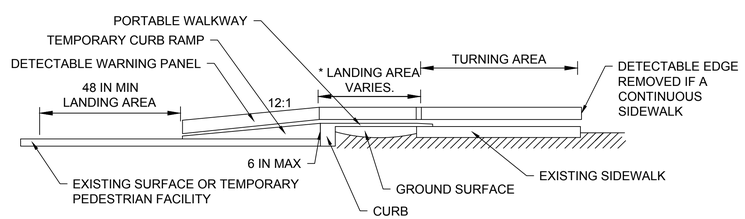

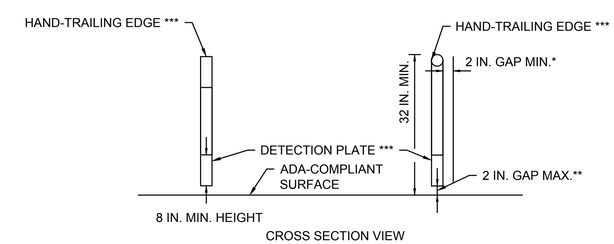

PEDESTRIAN CHANNELIZING DEVICE
NOT TO SCALE

NOTES:

* THERE SHALL BE A 2 INCH GAP BETWEEN THE HAND-TRAILING EDGE AND ITS SUPPORT.
** A MAXIMUM 2 INCH GAP BETWEEN THE BOTTOM OF THE BOTTOM RAIL AND THE SURFACE MAY BE USED TO PROVIDE DRAINAGE.
*** THE HAND-TRAILING EDGE AND DETECTION PLATE SHALL BE CONTINUOUS THROUGHOUT THE LENGTH OF THE PATH SUCH THAT A PEDESTRIAN USER WITH A LONG CANE CAN FOLLOW IT.

NATICK/FRAMINGHAM
COCHITUATE RAIL TRAIL

STATE	FED. AID PROJ. NO.	SHEET NO.	TOTAL SHEETS
MA	STP(TE)/TAP/CMQ-003S(206)	116	253
PROJECT FILE NO.	607732		

TEMPORARY TRAFFIC CONTROL PLAN

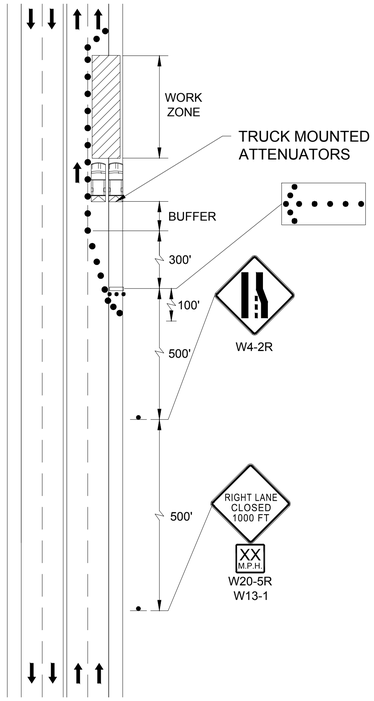

MULTIPLE LANE ROADWAY - RIGHT LANE CLOSED
NOT TO SCALE

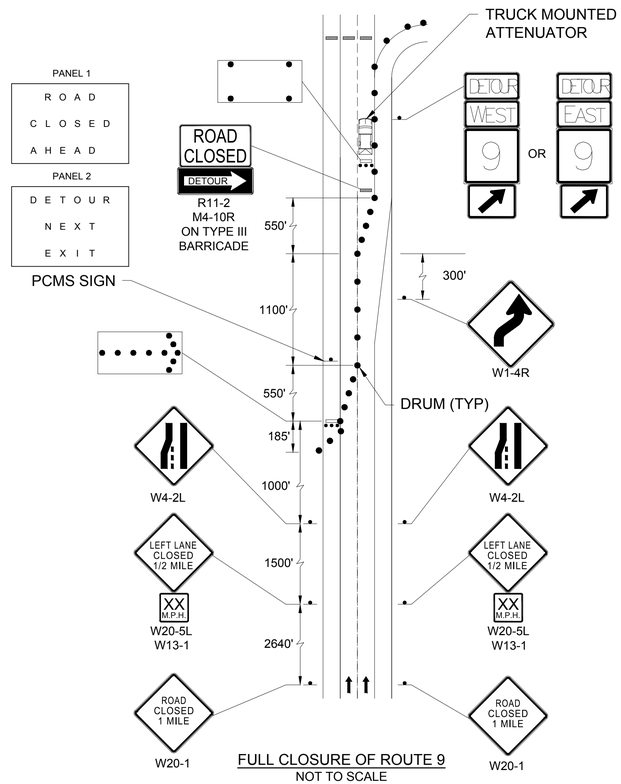

FULL CLOSURE OF ROUTE 9
NOT TO SCALE

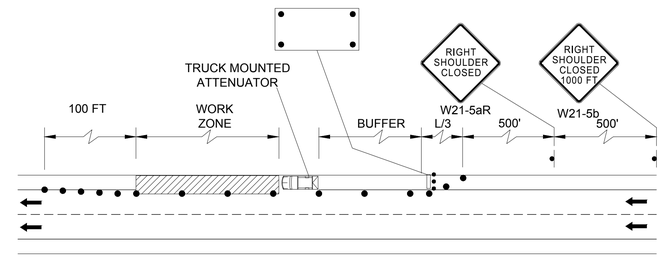

DIVIDED HIGHWAY - SHOULDER CLOSED
NOT TO SCALE

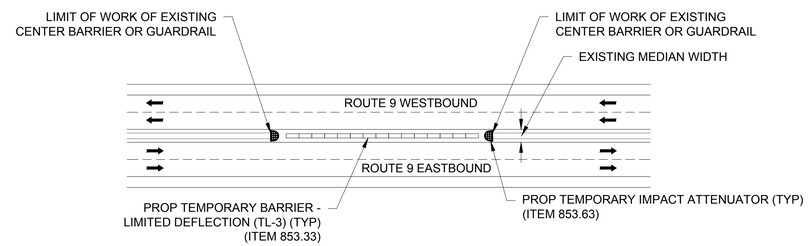

ROUTE 9 TEMPORARY MEDIAN BARRIER DETAILS
STA 7+50 TO STA 9+58 AND STA 15+56 TO 18+56
NOT TO SCALE

MA-R2-10a
NOTE:
"WORK ZONE"
BLACK ON ORANGE;
"SPEEDING FINES DOUBLED"
BLACK ON WHITE

MA-R2-10e
NOTE:
"END ROAD WORK"
BLACK ON ORANGE;
"DOUBLE FINES END"
BLACK ON WHITE

W20-1A
36" x 36"

W20-1B
36" x 36"

CONSTRUCTION SIGNS
NOT TO SCALE

SAFETY SIGNING FOR TEMPORARY TRAFFIC CONTROL OPERATIONS

LEGEND	TYPE	SIZE	COLOR			UNIT AREA	NO. SIGNS	TOTAL AREA	POSTS
			BACKGROUND	LEGEND	BORDER				
WORK ZONE SPEEDING FINES...	MA-R2-10a	48" x 36"	WHITE	BLACK	BLACK	12 SF	4	48 SF	P-5: 4
END ROAD WORK	MA-R2-10e	36" x 48"	WHITE/ORANGE**	BLACK	BLACK	12 SF	4	48 SF	P-5: 4
SIDEWALK CLOSED CROSS HERE	R9-11a	48" x 24"	WHITE	BLACK	BLACK	8 SF	2	16 SF	P-5: 2
ROAD CLOSED	R11-2	48" x 30"	WHITE	BLACK	BLACK	10 SF	2	20 SF	P-5: 2
DETOUR RIGHT	M4-10R	48" x 18"	ORANGE**	BLACK	BLACK	6 SF	2	12 SF	P-5: 0
REVERSE CURVE RIGHT	W1-4R	36" x 36"	ORANGE**	BLACK	BLACK	9 SF	2	18 SF	P-5: 2
BE PREPARED TO STOP	W3-4	36" x 36"	ORANGE**	BLACK	BLACK	9 SF	4	36 SF	P-5: 4
LEFT LANE ENDS	W4-2L	36" x 36"	ORANGE**	BLACK	BLACK	9 SF	6	54 SF	P-5: 6
RIGHT LANE ENDS	W4-2R	36" x 36"	ORANGE**	BLACK	BLACK	9 SF	2	18 SF	P-5: 2
BUMP	W8-1	36" x 36"	ORANGE**	BLACK	BLACK	9 SF	4	36 SF	P-5: 4
PAVEMENT ENDS	W8-3	36" x 36"	ORANGE**	BLACK	BLACK	9 SF	4	36 SF	P-5: 4
GROOVED PAVEMENT	W8-15	36" x 36"	ORANGE**	BLACK	BLACK	9 SF	4	36 SF	P-5: 4
STEEL PLATE AHEAD	W8-24	36" x 36"	ORANGE**	BLACK	BLACK	9 SF	4	36 SF	P-5: 4
PEDESTRIAN	W11-2	30" x 30"	FYG***	BLACK	BLACK	6.3 SF	4	25 SF	P-5: 4
ADVISORY SPEED	W13-1	24" x 30"	ORANGE**	BLACK	BLACK	5 SF	4	20 SF	P-5: 0
DOWNWARD LEFT DIAGONAL ARROW	W16-7pL	24" x 12"	FYG***	BLACK	BLACK	2 SF	4	8 SF	P-5: 0
ROAD CLOSED 1 MILE	W20-1	36" x 36"	ORANGE**	BLACK	BLACK	9 SF	4	36 SF	P-5: 4
ROAD WORK 1500 FT	W20-1A	36" x 36"	ORANGE**	BLACK	BLACK	9 SF	4	36 SF	P-5: 4
ROAD WORK AHEAD	W20-1B	36" x36"	ORANGE**	BLACK	BLACK	9 SF	4	36 SF	P-5: 4
LEFT LANE CLOSED 1000 FT	W20-5L	36" x 36"	ORANGE**	BLACK	BLACK	9 SF	4	36 SF	P-5: 4
RIGHT LANE CLOSED 1000 FT	W20-5R	36" x 36"	ORANGE**	BLACK	BLACK	9 SF	2	18 SF	P-5: 2
POLICE OFFICER AHEAD	MA-W20-7b	36" x 36"	ORANGE**	BLACK	BLACK	9 SF	4	36 SF	P-5: 4
RIGHT SHOULDER CLOSED	W21-5aR	36" x 36"	ORANGE**	BLACK	BLACK	9 SF	2	18 SF	P-5: 2
RIGHT SHOULDER CLOSED 1000 FT	W21-5b	36" x 36"	ORANGE**	BLACK	BLACK	9 SF	4	36 SF	P-5: 4
					TOTAL AREA OF SIGNS:			703 SF	P-5: 74

* NO. OF SIGNS ARE ESTIMATED FOR BIDDING PURPOSES ONLY

** ALL CONSTRUCTION SIGNAGE SHALL HAVE FLUORESCENT ORANGE BACKGROUND

*** FLUORESCENT YELLOW GREEN

4576 TTCP 1-3.DWG Plotted on 20-Aug-2018 2:24 PM

ROUTE 9 CONSTRUCTION STAGING SEQUENCE

STAGE 1 - PRE-CONSTRUCTION

- MAINTAIN ACCESS TO ABUTTERS ON ROUTE 9.
- INSTALL TRAFFIC CONTROL DEVICES AS SHOWN ON THE PLANS AND AS REQUIRED BY THE ENGINEER.
- RELOCATE SELECT UTILITIES WITHIN PROJECT LIMITS. MAINTAIN CONNECTIONS TO ABUTTING PROPERTIES.
- UTILITY COMPANIES TO RELOCATE OVERHEAD UTILITIES AS SHOWN ON THE PLANS AND AS DIRECTED BY THE ENGINEER.
- INSTALL ADVANCE WARNING SIGNS AND OTHER TEMPORARY TRAFFIC CONTROL DEVICES.
- PREPARE CENTER MEDIAN FOR CROSSOVER:
  - UTILIZE MEDIAN DEMOLITION WORK ZONE DETAILS TO CLOSE LEFT LANES ON ROUTE 9.
  - REMOVE ROUTE 9 CENTER MEDIAN, GUARDRAIL, AND CURBING. (STA. 6+35 TO STA.12+05 AND STA. 12+30 TO STA 18+00) CONSTRUCT SUB-BASE AND TEMPORARY PAVEMENT.
  - INSTALL TEMPORARY FULL DEPTH ASPHALT PAVEMENT IN THE MEDIAN FOR CROSSOVERS.
  - INSTALL TEMPORARY BARRIER - LIMITED DEFLECTION (TL-3) IN MEDIAN.

STAGE 2 - R&D EXISTING BRIDGE SUPERSTRUCTURE

STAGE 2A - REMOVE EXISTING PEDESTRIAN WALKWAY ON BRIDGE

- MAINTAIN TRAFFIC ON ROUTE 9 WHILE EXISTING PEDESTRIAN WALKWAY DECKING ON BRIDGE IS REMOVED.

STAGE 2B - REMOVE SUPERSTRUCTURE OVER EB BARREL

- UTILIZE EASTBOUND CROSSOVER DETAIL.
- RELOCATE AND/OR INSTALL TRAFFIC CONTROL DEVICES AS SHOWN ON THE PLANS AND AS REQUIRED BY THE ENGINEER.
- SHIFT TRAFFIC TO WB BARREL USING EASTBOUND CROSSOVER.
- DEMOLISH SPAN OVER ROUTE 9 EB BARREL.
- BACKFILL EXCAVATION TO EXISTING GRADE AND PROVIDE AN ACCESSIBLE, WALKABLE PEDESTRIAN SURFACE

STAGE 2C - REMOVE SUPERSTRUCTURE OVER WB BARREL

- UTILIZE WESTBOUND CROSSOVER DETAIL.
- RELOCATE AND/OR INSTALL TRAFFIC CONTROL DEVICES AS SHOWN ON THE PLANS AND AS REQUIRED BY THE ENGINEER.
- SHIFT TRAFFIC TO EB BARREL USING WESTBOUND CROSSOVER.
- DEMOLISH SPAN OVER ROUTE 9 WB BARREL.
- BACKFILL EXCAVATION TO EXISTING GRADE AND PROVIDE AN ACCESSIBLE, WALKABLE PEDESTRIAN SURFACE

STAGE 3 - R&D EXISTING BRIDGE SUBSTRUCTURE

STAGE 3A - R&D SOUTH ABUTMENT

- UTILIZE EASTBOUND RIGHT LANE CLOSURE DETAIL.
- RELOCATE AND/OR INSTALL TRAFFIC CONTROL DEVICES AS SHOWN ON THE PLANS AND AS REQUIRED BY THE ENGINEER.
- SHIFT TRAFFIC TO SINGLE LANE LAYOUT EASTBOUND. (MAINTAIN TWO LANES WESTBOUND)
- DEMOLISH SOUTH ABUTMENT, WALLS & FOOTINGS.

STAGE 3B - R&D NORTH ABUTMENT

- UTILIZE WESTBOUND RIGHT LANE CLOSURE DETAIL.
- RELOCATE AND/OR INSTALL TRAFFIC CONTROL DEVICES AS SHOWN ON THE PLANS AND AS REQUIRED BY THE ENGINEER.
- SHIFT TRAFFIC TO SINGLE LANE LAYOUT WESTBOUND. (MAINTAIN TWO LANES EASTBOUND)
- INSTALL TEMPORARY PEDESTRIAN BYPASS. (TEMPORARY BARRIER, CURB RAMPS AND CHANNELIZING DEVICES)
- DEMOLISH NORTH ABUTMENT, WALLS & FOOTINGS.

STAGE 3C - R&D CENTER PIER

- UTILIZE MEDIAN WORK ZONE DETAIL.
- RELOCATE AND/OR INSTALL TRAFFIC CONTROL DEVICES AS SHOWN ON THE PLANS AND AS REQUIRED BY THE ENGINEER.
- SHIFT TRAFFIC TO OUTSIDE LANES EASTBOUND AND WESTBOUND.
- DEMOLISH CENTER PIER SUPERSTRUCTURE. (RETAIN CONCRETE BASE)

STAGE 4 - CONSTRUCT PROPOSED SUBSTRUCTURE

STAGE 4A - CONSTRUCT SOUTH ABUTMENT & WINGWALLS

- UTILIZE EASTBOUND RIGHT LANE CLOSURE DETAIL.
- RELOCATE AND/OR INSTALL TRAFFIC CONTROL DEVICES AS SHOWN ON THE PLANS AND AS REQUIRED BY THE ENGINEER.
- SHIFT TRAFFIC TO SINGLE LANE LAYOUT EASTBOUND. (MAINTAIN TWO LANES WESTBOUND)
- CONSTRUCT SOUTH ABUTMENT AND WINGWALLS.

STAGE 4B - CONSTRUCT NORTH ABUTMENT & WINGWALLS

- UTILIZE WESTBOUND RIGHT LANE CLOSURE DETAIL.
- RELOCATE AND/OR INSTALL TRAFFIC CONTROL DEVICES AS SHOWN ON THE PLANS AND AS REQUIRED BY THE ENGINEER.
- SHIFT TRAFFIC TO SINGLE LANE LAYOUT WESTBOUND. (MAINTAIN TWO LANES EASTBOUND)
- INSTALL TEMPORARY PEDESTRIAN BYPASS. (TEMPORARY BARRIER, CURB RAMPS AND CHANNELIZING DEVICES)
- CONSTRUCT NORTH ABUTMENT AND WINGWALLS.

STAGE 5 - CONSTRUCT PROPOSED SUPERSTRUCTURE

STAGE 5A - ERECT/LAUNCH PREFABRICATED TRUSS

- IMPLEMENT FULL CLOSURE OF ROUTE 9.
- MAINTAIN ACCESS TO ABUTTER ON ROUTE 9.
- UTILIZE ROUTE 9 DETOUR PLANS. (SEE SHEETS 134-135)
- INSTALL ADVANCE WARNING SIGNS AND OTHER TEMPORARY TRAFFIC CONTROL DEVICES.
- IMPLEMENT ROUTE 9 DETOUR:
  - UTILIZE DETOUR ROUTING PLAN OR LANE CLOSURE DETAILS AS APPLICABLE.
  - RELOCATE AND/OR INSTALL TRAFFIC CONTROL DEVICES AS SHOWN ON THE PLANS AND AS REQUIRED BY THE ENGINEER.
  - CLOSE ROUTE 9 EASTBOUND AND WESTBOUND TO ALL TRAFFIC. (VEHICULAR, PEDESTRIAN, BICYCLE)
  - INSTALL WORK ZONE.
- ERECT/LAUNCH PREFABRICATED BRIDGE TRUSS.

STAGE 5B - FORM CONCRETE DECK OVER EB BARREL

- UTILIZE EASTBOUND CROSSOVER DETAIL.
- RELOCATE AND/OR INSTALL TRAFFIC CONTROL DEVICES AS SHOWN ON THE PLANS AND AS REQUIRED BY THE ENGINEER.
- SHIFT TRAFFIC TO WB BARREL USING EASTBOUND CROSSOVER.
- FORM CONCRETE DECK OVER EASTBOUND BARREL.

STAGE 5C - FORM CONCRETE DECK OVER WB BARREL

- UTILIZE WESTBOUND CROSSOVER DETAIL.
- RELOCATE AND/OR INSTALL TRAFFIC CONTROL DEVICES AS SHOWN ON THE PLANS AND AS REQUIRED BY THE ENGINEER.
- SHIFT TRAFFIC TO EB BARREL USING WESTBOUND CROSSOVER.
- FORM CONCRETE DECK OVER WESTBOUND BARREL.

STAGE 5D - REINFORCE CONCRETE DECK

- MAINTAIN TRAFFIC ON ROUTE 9 WHILE CONCRETE DECK IS REINFORCED.

STAGE 5E - SHIFT TRAFFIC TO INSIDE LANE ON ROUTE 9 EB BARREL

- UTILIZE EASTBOUND RIGHT LANE CLOSURE DETAIL.
- RELOCATE AND/OR INSTALL TRAFFIC CONTROL DEVICES AS SHOWN ON THE PLANS AND AS REQUIRED BY THE ENGINEER.
- SHIFT TRAFFIC TO SINGLE LANE LAYOUT EASTBOUND. (MAINTAIN TWO LANES WESTBOUND)
- PLACE CONCRETE DECK OVER LIVE TRAFFIC.

STAGE 6 - RESTORE MEDIAN WITH PROPOSED MEDIAN BARRIER

- UTILIZE LANE SHIFT WORK ZONE DETAILS.
- RELOCATE AND/OR INSTALL TRAFFIC CONTROL DEVICES AS SHOWN ON THE PLANS AND AS REQUIRED BY THE ENGINEER.
- REMOVE EXISTING PAVEMENT MARKINGS AND SLOTTED PAVEMENT MARKERS ON ROUTE 9 EASTBOUND AND WESTBOUND.
- SHIFT TRAVEL LANES EASTBOUND AND WESTBOUND AND INSTALL TEMPORARY PAVEMENT MARKINGS.
- INSTALL TEMPORARY RESTRAINED BARRIER ALONG EXISTING MEDIAN FOR BOTH EASTBOUND AND WESTBOUND.
- DEMOLISH CENTER PIER FOOTING AND FOUNDATION.
- CONSTRUCT PROPOSED CONCRETE MEDIAN BARRIER (WITH MILL AND OVERLAY OF ROUTE 9). (STA. 7+50 TO STA. 18+00)

NATICK/FRAMINGHAM
COCHITUATE RAIL TRAIL

STATE	FED. AID PROJ. NO.	SHEET NO.	TOTAL SHEETS
MA	STP(TE)/TAP/CMQ-003S(206)	117	253
PROJECT FILE NO.	607732		

CONSTRUCTION STAGING PLANS

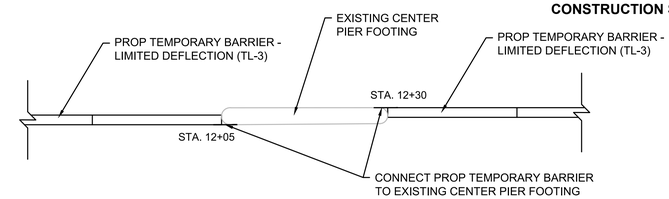

TYPICAL TEMPORARY BARRIER CONNECTION - DURING NON-WORKING HOURS (TYPICAL TRAFFIC) AND STAGES 1, 2A, 3A, 3B, 3C, 4A, 4B, 5A, 5D & 5E

NOT TO SCALE

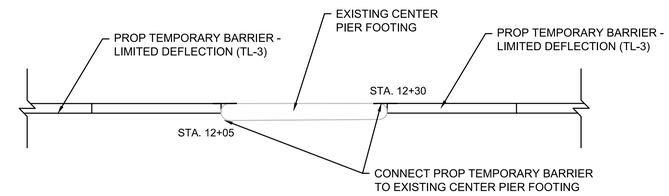

TYPICAL TEMPORARY BARRIER CONNECTION STAGES 2B & 5B (EASTBOUND CROSSOVER)

NOT TO SCALE

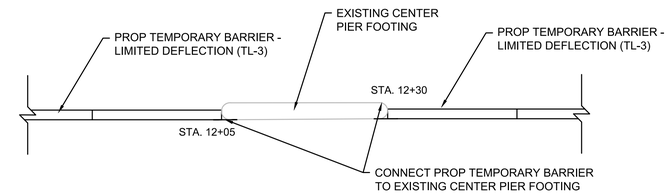

TYPICAL TEMPORARY BARRIER CONNECTION STAGES 2C & 5C (WESTBOUND CROSSOVER)

NOT TO SCALE

NOTES:

1. ALL WORK REQUIRING LANE CLOSURES SHALL OCCUR AT NIGHT (SUNDAY - THURSDAY) BETWEEN THE HOURS OF 10PM AND 5AM.
2. EXISTING PEDESTRIAN ACCESS SHALL BE MAINTAINED DURING STAGES 1, 2A, 2B, 3A, 3C, 4A, 5B, 5D, 5E AND 6. PEDESTRIAN SHUTTLE SHALL BE PROVIDED DURING STAGES 2C, 3B, 4B, 5A AND 5C.
3. MEDIAN CROSSOVERS SHALL BE RESTORED WITH TEMPORARY BARRIER AT THE COMPLETION OF WORK EACH NIGHT PRIOR TO REOPENING LANES TO TRAFFIC.
4. ALL TRAFFIC BARRIER PROPOSED TO BE CONNECTED TO EXISTING BARRIER OR MEDIAN SHALL FORM A CONTINUOUS STRING AND MUST PASS THE CRITERIA SET FORTH IN THE "MANUAL FOR ASSESSING SAFETY HARDWARE" (MASH) FOR TEST LEVEL-3 DESIGN. THE CONTRACTOR IS RESPONSIBLE FOR THE CONNECTION DESIGN IN ACCORDANCE WITH MANUFACTURER'S RECOMMENDATIONS.
5. THE FIRST TEN REFLECTORIZED PLASTIC DRUMS OF A TAPER SHALL BE MOUNTED WITH SEQUENTIAL FLASHING LIGHTS.

SAFETY SIGNING FOR ROUTE 9 CONSTRUCTION STAGING OPERATIONS

LEGEND	TYPE	SIZE	COLOR			UNIT AREA	NO. SIGNS	TOTAL AREA	POSTS
			BACKGROUND	LEGEND	BORDER				
NO LEFT TURN	R3-2	30" x 30"	ORANGE**	BLACK	BLACK	6.3 SF	2	12.5 SF	P-5: 2
SIDEWALK CLOSED	R9-9	24" x 12"	WHITE***	BLACK	BLACK	2 SF	2	4 SF	P-5: 0
ROAD CLOSED	R11-2	48" x 30"	WHITE***	BLACK	BLACK	10 SF	2	20 SF	P-5: 2
REVERSE CURVE LEFT	W1-4L	36" x 36"	ORANGE**	BLACK	BLACK	9 SF	4	36 SF	P-5: 4
REVERSE CURVE LEFT	W1-4cL	36" x 36"	ORANGE**	BLACK	BLACK	9 SF	4	36 SF	P-5: 4
REVERSE CURVE RIGHT	W1-4R	36" x 36"	ORANGE**	BLACK	BLACK	9 SF	2	18 SF	P-5: 2
REVERSE CURVE RIGHT	W1-4cR	36" x 36"	ORANGE**	BLACK	BLACK	9 SF	2	18 SF	P-5: 2
ARROW WARNING	W1-6	48" x 24"	ORANGE**	BLACK	BLACK	8 SF	2	16 SF	P-5: 0
LEFT LANE ENDS	W4-2L	36" x 36"	ORANGE**	BLACK	BLACK	9 SF	4	36 SF	P-5: 4
RIGHT LANE ENDS	W4-2R	36" x 36"	ORANGE**	BLACK	BLACK	9 SF	2	36 SF	P-5: 2
TWO WAY TRAFFIC	W6-3	36" x 36"	ORANGE**	BLACK	BLACK	9 SF	2	18 SF	P-5: 2
SHOULDER ENDS	W8-25	36" x 36"	ORANGE**	BLACK	BLACK	9 SF	2	18 SF	P-5: 2
ADVISORY SPEED	W13-1	24" x 30"	ORANGE**	BLACK	BLACK	5 SF	8	40 SF	P-5: 0
LEFT LANE CLOSED 1000 FT	W20-5L	36" x 36"	ORANGE**	BLACK	BLACK	9 SF	4	36 SF	P-5: 4
RIGHT LANE CLOSED 1000 FT	W20-5R	36" x 36"	ORANGE**	BLACK	BLACK	9 SF	4	36 SF	P-5: 4
LANE SHIFT 1000 FT	W21-11	36" x 36"	ORANGE**	BLACK	BLACK	9 SF	4	36 SF	P-5: 4
					TOTAL AREA OF SIGNS:			810.5 SF	P-5: 40

* NO. OF SIGNS ARE ESTIMATED FOR BIDDING PURPOSES ONLY

** ALL CONSTRUCTION SIGNAGE SHALL HAVE FLUORESCENT ORANGE BACKGROUND

*** FLUORESCENT WHITE

4576 STAGING PLAN - NOTES.DWG Plotted on 20-Aug-2018 2:24 PM

STAGE 1 NOTES:

1. ALL WORK REQUIRING LANE CLOSURES SHALL OCCUR AT NIGHT (SUNDAY - THURSDAY) BETWEEN THE HOURS OF 10PM AND 5AM.
2. EXISTING PEDESTRIAN ACCESS SHALL BE MAINTAINED DURING THIS STAGE.
3. ALL TRAFFIC BARRIER PROPOSED TO BE CONNECTED TO EXISTING BARRIER OR MEDIAN SHALL FORM A CONTINUOUS STRING AND MUST PASS THE CRITERIA SET FORTH IN THE "MANUAL FOR ASSESSING SAFETY HARDWARE" (MASH) FOR TEST LEVEL-3 DESIGN. THE CONTRACTOR IS RESPONSIBLE FOR THE CONNECTION DESIGN IN ACCORDANCE WITH MANUFACTURER'S RECOMMENDATIONS.
4. THE FIRST TEN REFLECTORIZED PLASTIC DRUMS OF A TAPER SHALL BE MOUNTED WITH SEQUENTIAL FLASHING LIGHTS.

NATICK/FRAMINGHAM
COCHITUATE RAIL TRAIL

STATE	FED. AID PROJ. NO.	SHEET NO.	TOTAL SHEETS
MA	STP(TE)/TAP/CMQ-003S(206)	118	253
PROJECT FILE NO.	607732		

CONSTRUCTION STAGING PLANS
MEDIAN DEMOLITION WORK ZONE
STAGE 1

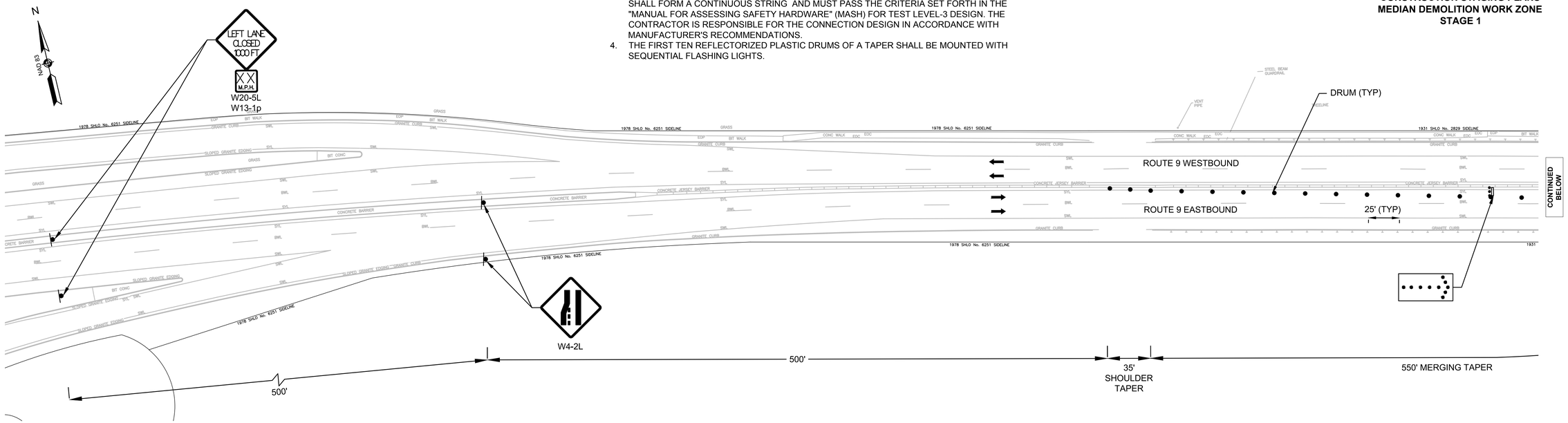

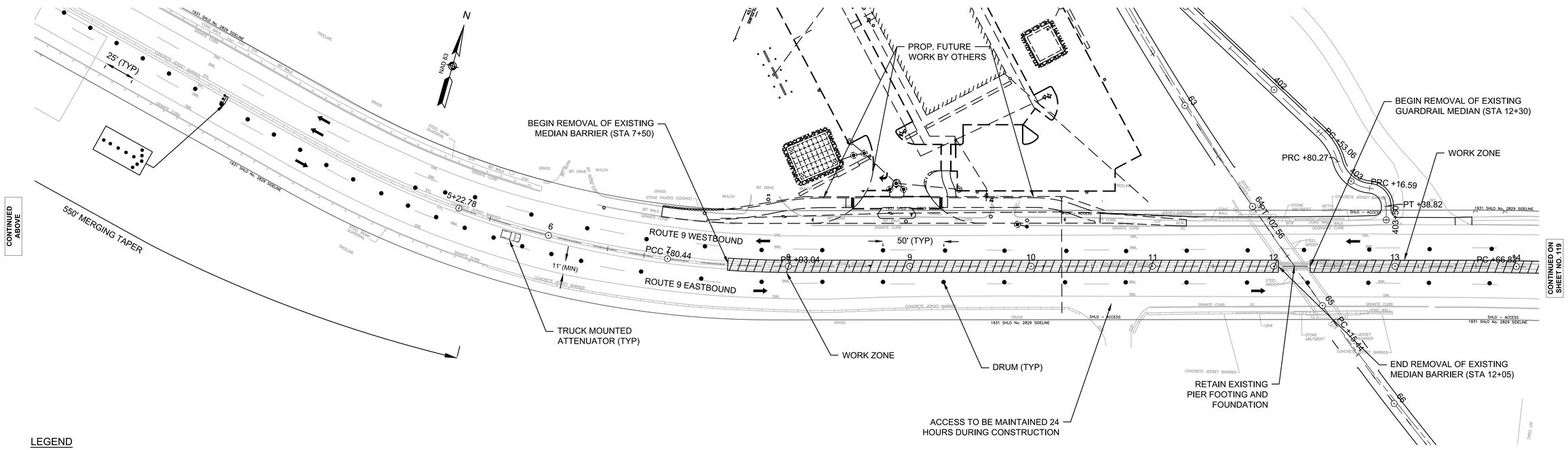

LEGEND
● DRUM

0 40 100 160
SCALE: 1" = 40'

4576 STAGING PLAN - MEDIAN CLOSURE - STAGE 1.DWG Plotted on 20-Aug-2018 2:25 PM

NATICK/FRAMINGHAM
COCHITUATE RAIL TRAIL

STATE	FED. AID PROJ. NO.	SHEET NO.	TOTAL SHEETS
MA	STP(TE)/TAP/CMQ-003S(206)	119	253
PROJECT FILE NO.	607732		

CONSTRUCTION STAGING PLANS
MEDIAN DEMOLITION WORK ZONE
STAGE 1

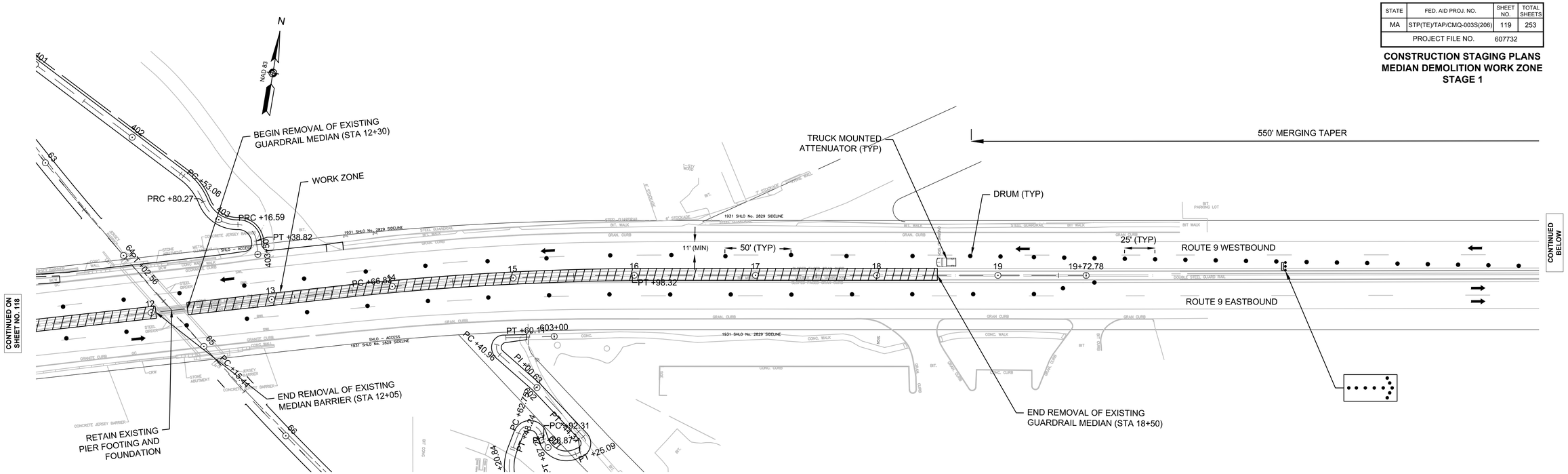

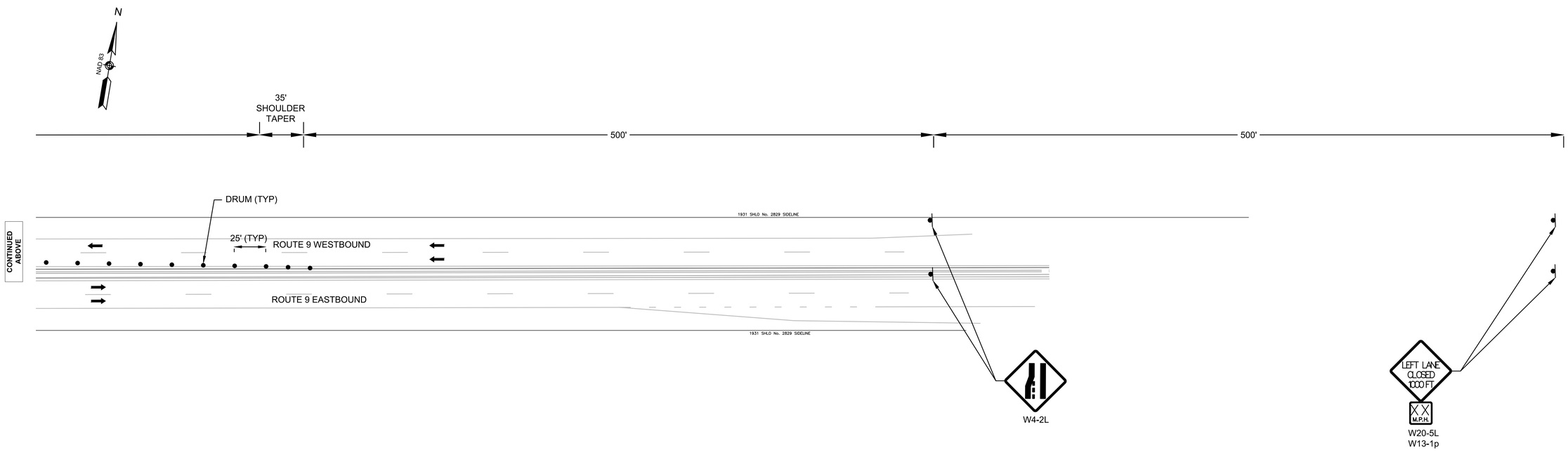

LEGEND

● DRUM

0 40 100 160

SCALE: 1" = 40'

4576 STAGING PLAN - MEDIAN CLOSURE - STAGE 1.DWG Plotted on 20-Aug-2018 2:25 PM

STAGE 2B & 5B NOTES:

1. ALL WORK REQUIRING LANE CLOSURES SHALL OCCUR AT NIGHT (SUNDAY - THURSDAY) BETWEEN THE HOURS OF 10PM AND 5AM.
2. EXISTING PEDESTRIAN ACCESS SHALL BE MAINTAINED DURING THIS STAGE.
3. ALL TRAFFIC BARRIER PROPOSED TO BE CONNECTED TO EXISTING BARRIER OR MEDIAN SHALL FORM A CONTINUOUS STRING AND MUST PASS THE CRITERIA SET FORTH IN THE "MANUAL FOR ASSESSING SAFETY HARDWARE" (MASH) FOR TEST LEVEL-3 DESIGN. THE CONTRACTOR IS RESPONSIBLE FOR THE CONNECTION DESIGN IN ACCORDANCE WITH MANUFACTURER'S RECOMMENDATIONS.
4. THE FIRST TEN REFLECTORIZED PLASTIC DRUMS OF A TAPER SHALL BE MOUNTED WITH SEQUENTIAL FLASHING LIGHTS.

NATICK/FRAMINGHAM
COCHITUATE RAIL TRAIL

STATE	FED. AID PROJ. NO.	SHEET NO.	TOTAL SHEETS
MA	STP(TE)/TAP/CMQ-003S(206)	120	253
PROJECT FILE NO.	607732		

CONSTRUCTION STAGING PLANS
EASTBOUND CROSSOVER
STAGES 2B & 5B

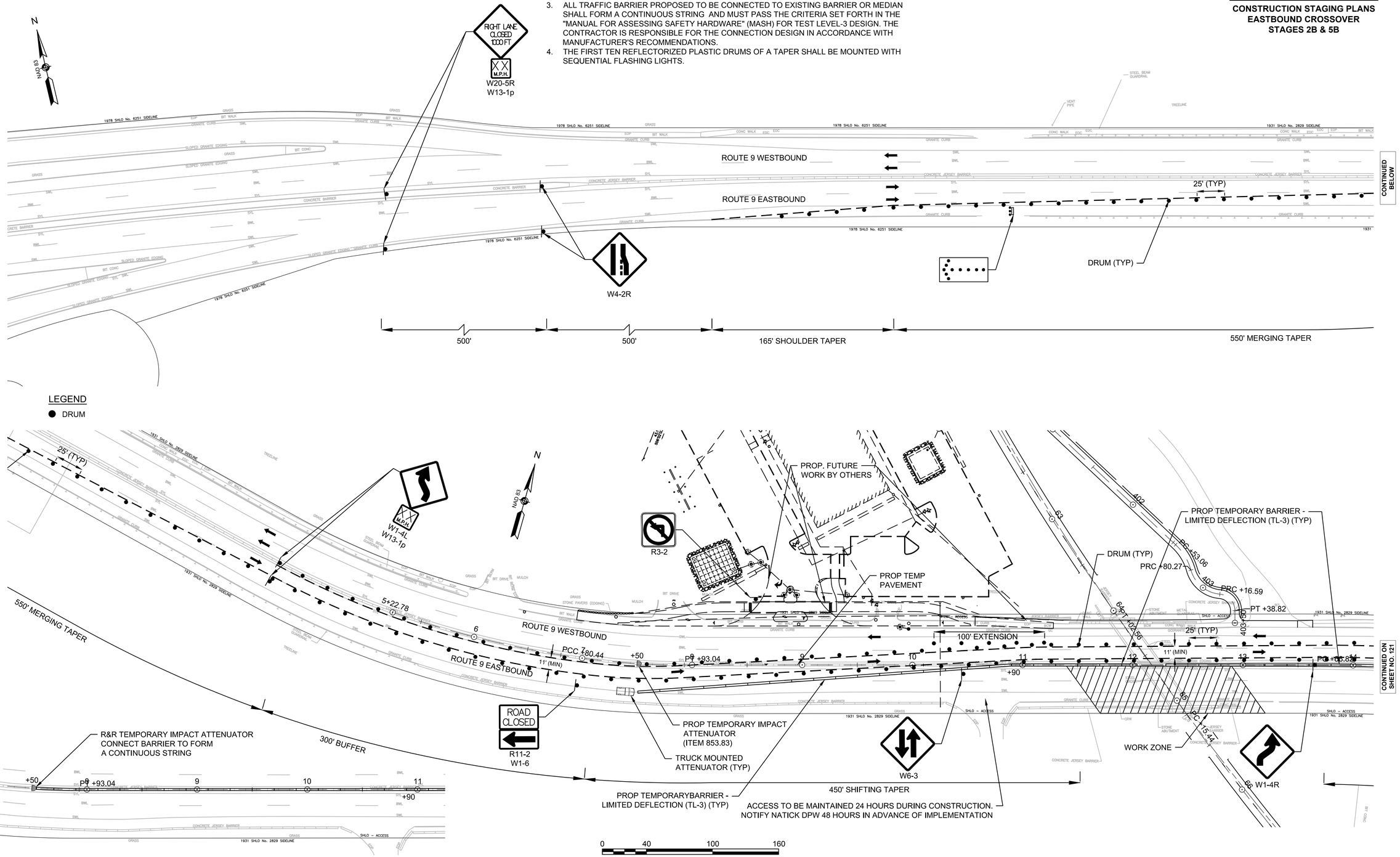

LEGEND
● DRUM

BARRIER POSITIONING OUTSIDE OF WORK HOURS DETAIL
SCALE: 1" = 40'

4576 STAGING PLAN - EB CROSSOVER.DWG Plotted on 20-Aug-2018 2:25 PM

NATICK/FRAMINGHAM
COCHITUATE RAIL TRAIL

STATE	FED. AID PROJ. NO.	SHEET NO.	TOTAL SHEETS
MA	STP(TE)/TAP/CMQ-003S(206)	121	253
PROJECT FILE NO.	607732		

CONSTRUCTION STAGING PLANS
EASTBOUND CROSSOVER
STAGES 2B & 5B

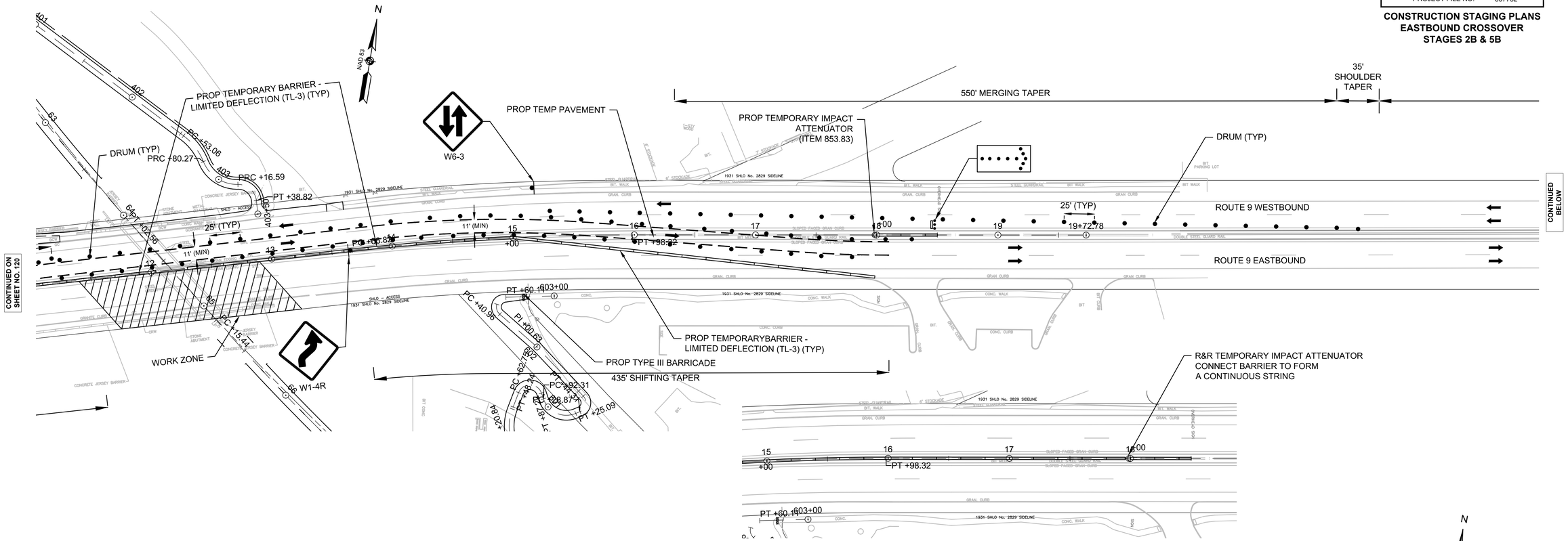

BARRIER POSITIONING OUTSIDE OF WORK HOURS DETAIL

SCALE: 1" = 40'

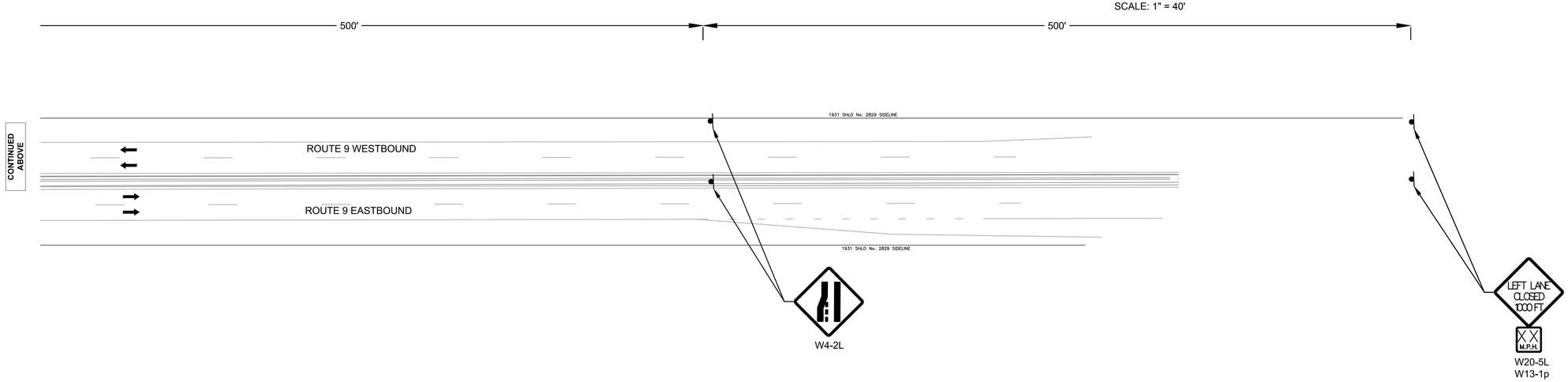

LEGEND

● DRUM

0 40 100 160

SCALE: 1" = 40'

4576 STAGING PLAN - EB CROSSOVER.DWG Plotted on 20-Aug-2018 2:25 PM

STAGE 2C & 5C NOTES:

1. ALL WORK REQUIRING LANE CLOSURES SHALL OCCUR AT NIGHT (SUNDAY - THURSDAY) BETWEEN THE HOURS OF 10PM AND 5AM.
2. PEDESTRIAN SHUTTLE SHALL BE PROVIDED DURING STAGES 2C AND 5C.
3. ALL TRAFFIC BARRIER PROPOSED TO BE CONNECTED TO EXISTING BARRIER OR MEDIAN SHALL FORM A CONTINUOUS STRING AND MUST PASS THE CRITERIA SET FORTH IN THE "MANUAL FOR ASSESSING SAFETY HARDWARE" (MASH) FOR TEST LEVEL-3 DESIGN. THE CONTRACTOR IS RESPONSIBLE FOR THE CONNECTION DESIGN IN ACCORDANCE WITH MANUFACTURER'S RECOMMENDATIONS.
4. THE FIRST TEN REFLECTORIZED PLASTIC DRUMS OF A TAPER SHALL BE MOUNTED WITH SEQUENTIAL FLASHING LIGHTS.

NATICK/FRAMINGHAM COCHITUATE RAIL TRAIL

STATE	FED. AID PROJ. NO.	SHEET NO.	TOTAL SHEETS
MA	STP(TE)/TAP/CMQ-003S(206)	122	253
PROJECT FILE NO.	607732		

CONSTRUCTION STAGING PLANS WESTBOUND CROSSOVER STAGES 2C & 5C

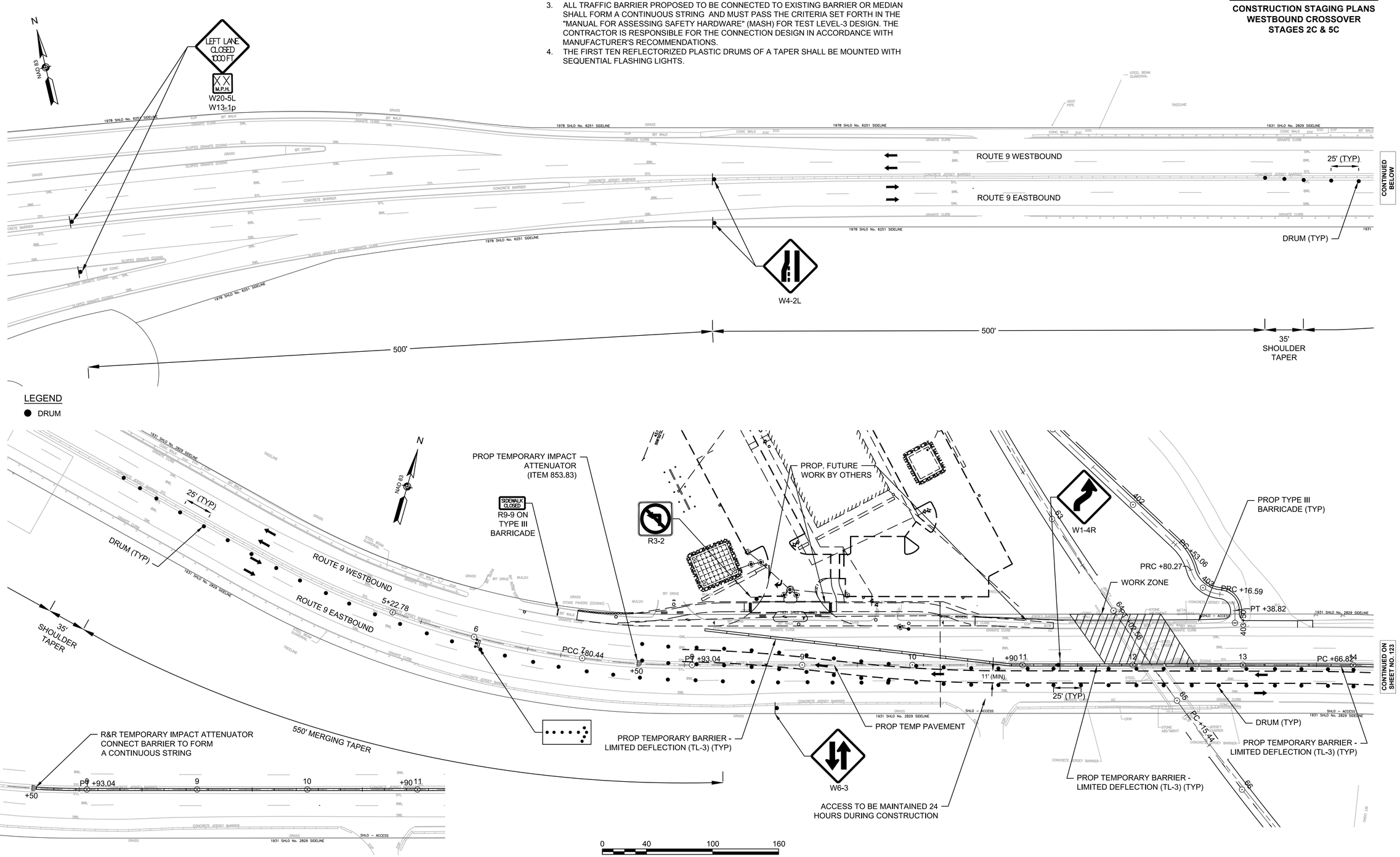

BARRIER POSITIONING OUTSIDE OF WORK HOURS DETAIL

SCALE: 1" = 40'

4576 STAGING PLAN - WB CROSSOVER.DWG Plotted on 20-Aug-2018 2:26 PM

NATICK/FRAMINGHAM
COCHITUATE RAIL TRAIL

STATE	FED. AID PROJ. NO.	SHEET NO.	TOTAL SHEETS
MA	STP(TE)/TAP/CMQ-003S(206)	123	253
PROJECT FILE NO.	607732		

CONSTRUCTION STAGING PLANS
WESTBOUND CROSSOVER
STAGES 2C & 5C

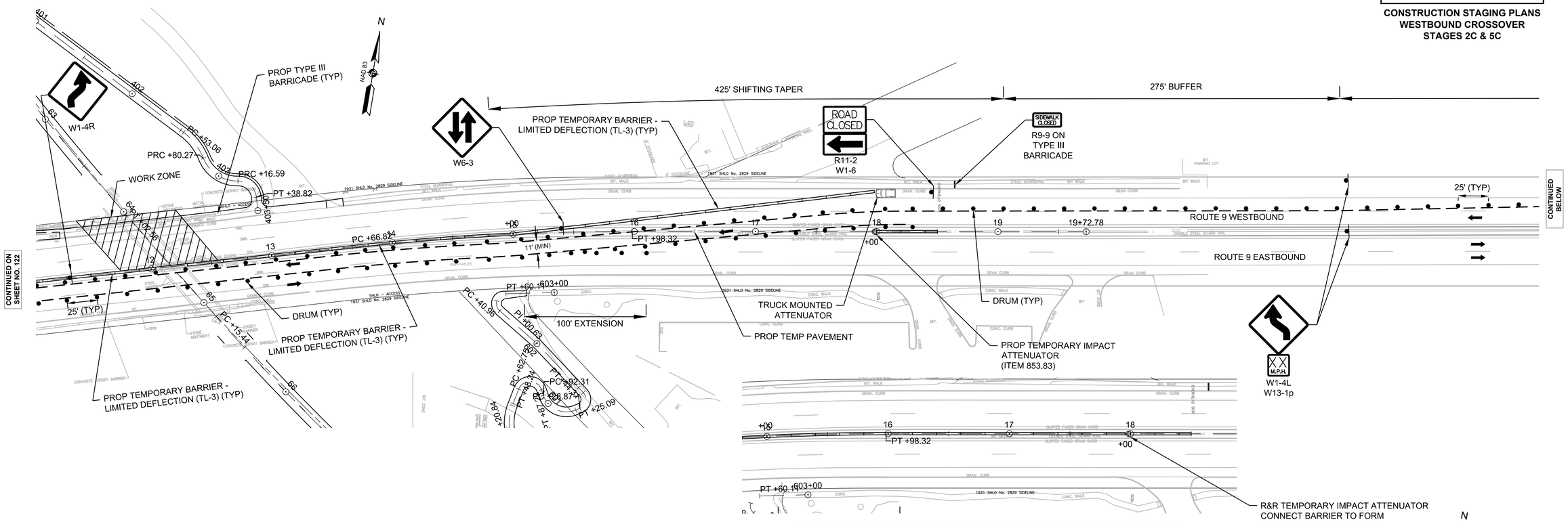

BARRIER POSITIONING OUTSIDE OF WORK HOURS DETAIL

SCALE: 1" = 40'

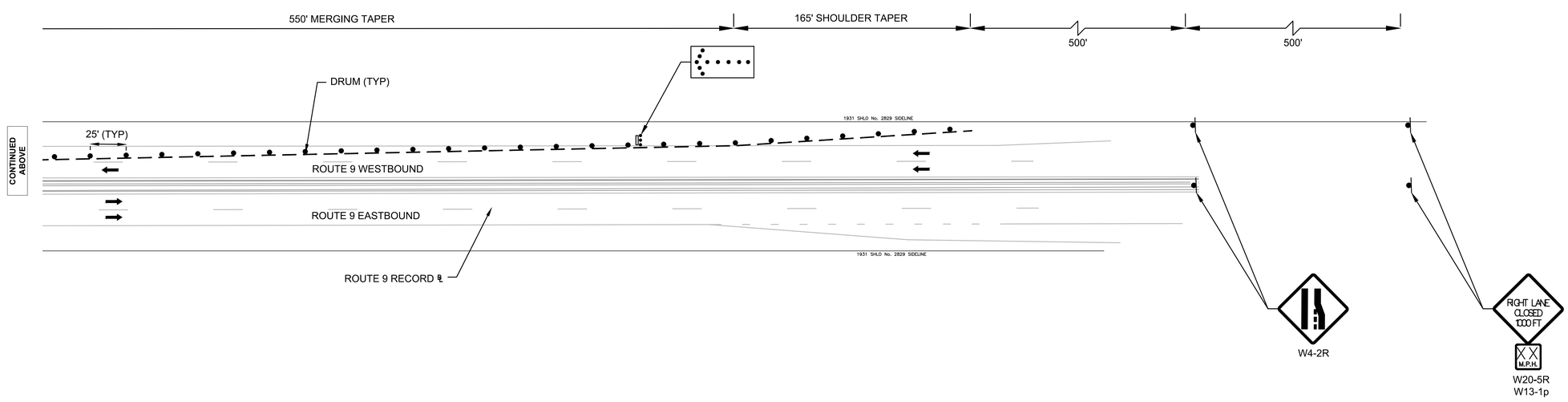

LEGEND

● DRUM

0 40 100 160

SCALE: 1" = 40'

4576 STAGING PLAN - WB CROSSOVER.DWG Plotted on 20-Aug-2018 2:26 PM

STAGE 3A, 4A & 5E NOTES:

1. ALL WORK REQUIRING LANE CLOSURES SHALL OCCUR AT NIGHT (SUNDAY - THURSDAY) BETWEEN THE HOURS OF 10PM AND 5AM.
2. EXISTING PEDESTRIAN ACCESS SHALL BE MAINTAINED DURING THESE STAGES.
3. ALL TRAFFIC BARRIER PROPOSED TO BE CONNECTED TO EXISTING BARRIER OR MEDIAN SHALL FORM A CONTINUOUS STRING AND MUST PASS THE CRITERIA SET FORTH IN THE "MANUAL FOR ASSESSING SAFETY HARDWARE" (MASH) FOR TEST LEVEL-3 DESIGN. THE CONTRACTOR IS RESPONSIBLE FOR THE CONNECTION DESIGN IN ACCORDANCE WITH MANUFACTURER'S RECOMMENDATIONS.
4. THE FIRST TEN REFLECTORIZED PLASTIC DRUMS OF A TAPER SHALL BE MOUNTED WITH SEQUENTIAL FLASHING LIGHTS.

NATICK/FRAMINGHAM
COCHITUATE RAIL TRAIL

STATE	FED. AID PROJ. NO.	SHEET NO.	TOTAL SHEETS
MA	STP(TE)/TAP/CMQ-003S(206)	124	253
PROJECT FILE NO.	607732		

CONSTRUCTION STAGING PLANS
EASTBOUND RIGHT LANE CLOSURE
STAGES 3A, 4A & 5E

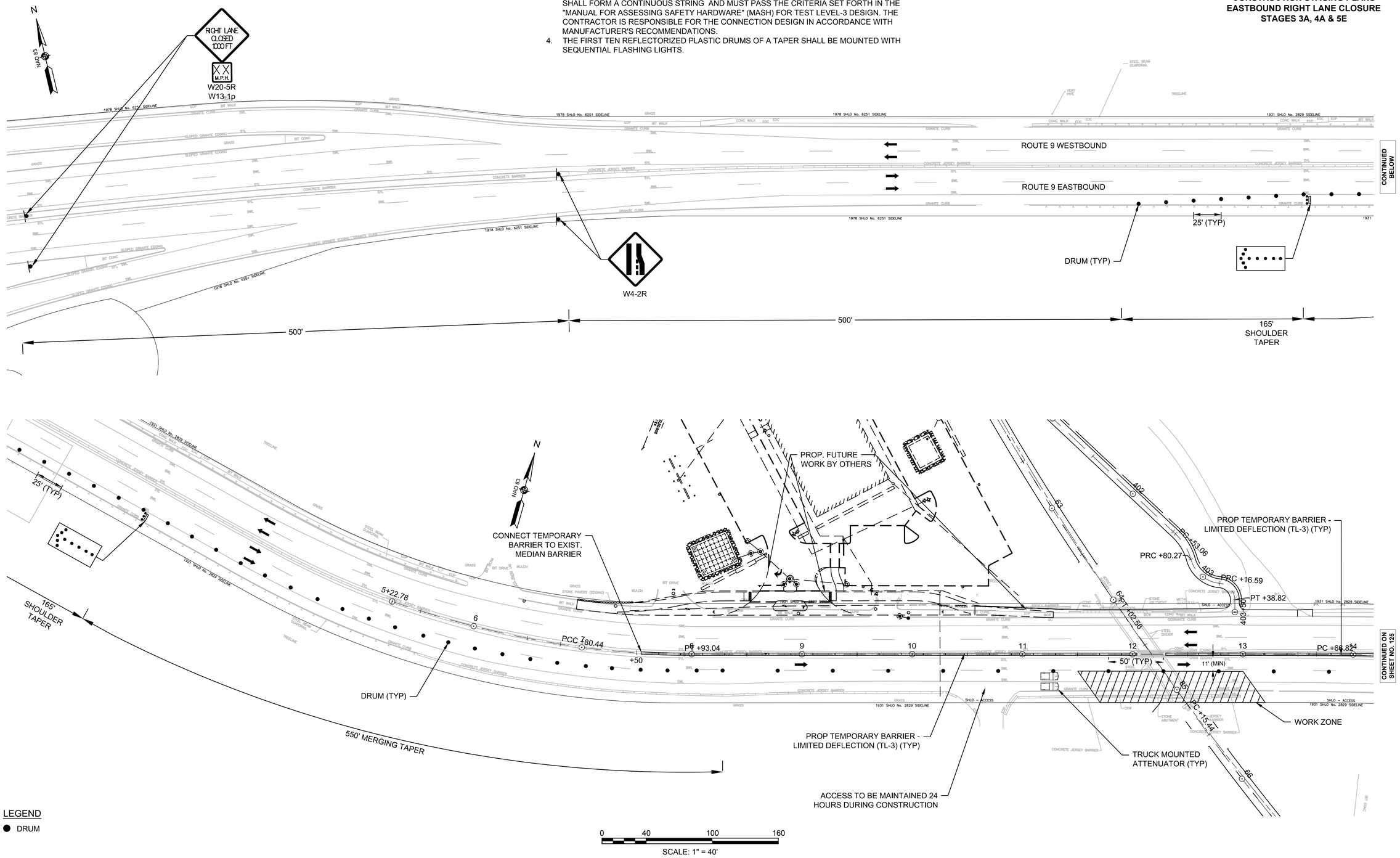

4576 STAGING PLAN - EB RIGHT LANE CLOSURE.DWG Plotted on 20-Aug-2018 2:26 PM

NATICK/FRAMINGHAM
COCHITUATE RAIL TRAIL

STATE	FED. AID PROJ. NO.	SHEET NO.	TOTAL SHEETS
MA	STP(TE)/TAP/CMQ-003S(206)	125	253
PROJECT FILE NO.	607732		

CONSTRUCTION STAGING PLANS
EASTBOUND RIGHT LANE CLOSURE
STAGES 3A, 4A & 5E

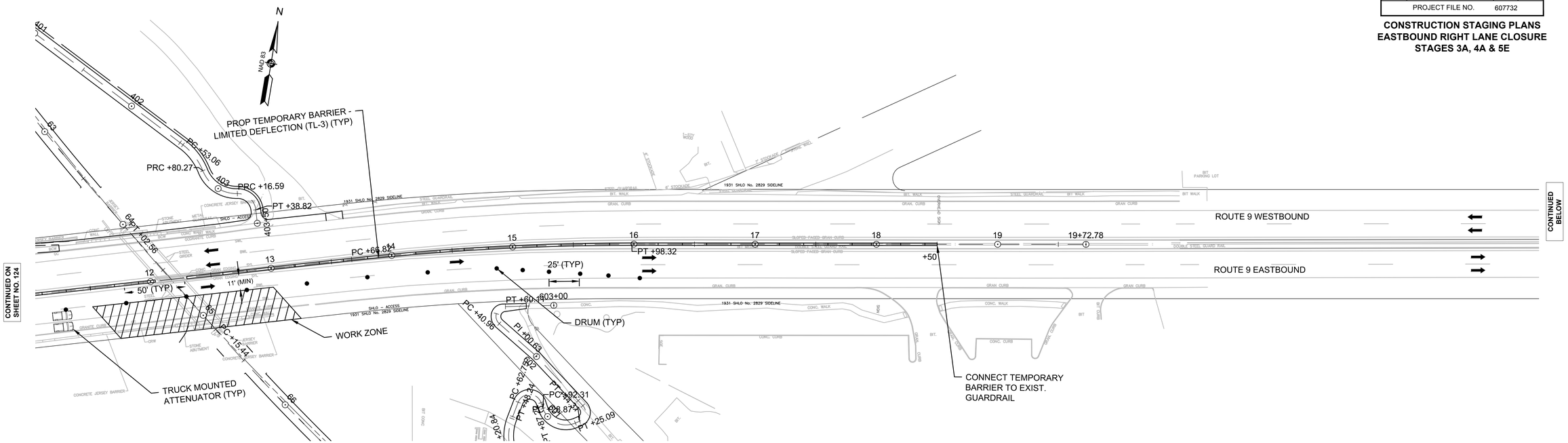

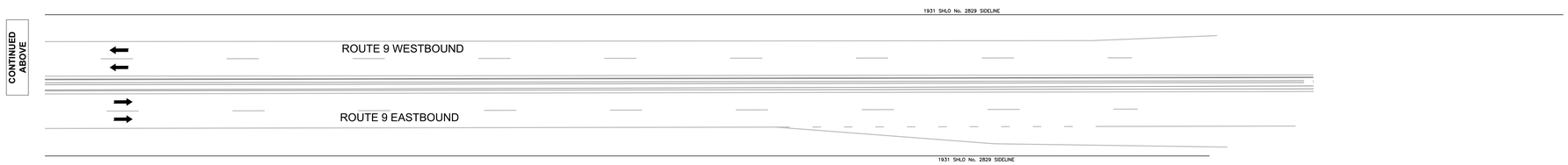

LEGEND
● DRUM

0 40 100 160
SCALE: 1" = 40'

4576 STAGING PLAN - EB RIGHT LANE CLOSURE.DWG Plotted on 20-Aug-2018 2:27 PM

STAGE 3B & 4B NOTES:

1. ALL WORK REQUIRING LANE CLOSURES SHALL OCCUR AT NIGHT (SUNDAY - THURSDAY) BETWEEN THE HOURS OF 10PM AND 5AM.
2. PEDESTRIAN SHUTTLE SHALL BE PROVIDED DURING STAGES 3B AND 4B.
3. ALL TRAFFIC BARRIER PROPOSED TO BE CONNECTED TO EXISTING BARRIER OR MEDIAN SHALL FORM A CONTINUOUS STRING AND MUST PASS THE CRITERIA SET FORTH IN THE "MANUAL FOR ASSESSING SAFETY HARDWARE" (MASH) FOR TEST LEVEL-3 DESIGN. THE CONTRACTOR IS RESPONSIBLE FOR THE CONNECTION DESIGN IN ACCORDANCE WITH MANUFACTURER'S RECOMMENDATIONS.
4. THE FIRST TEN REFLECTORIZED PLASTIC DRUMS OF A TAPER SHALL BE MOUNTED WITH SEQUENTIAL FLASHING LIGHTS.

NATICK/FRAMINGHAM
COCHITUATE RAIL TRAIL

STATE	FED. AID PROJ. NO.	SHEET NO.	TOTAL SHEETS
MA	STP(TE)/TAP/CMQ-003S(206)	126	253
PROJECT FILE NO.	607732		

CONSTRUCTION STAGING PLANS
WESTBOUND RIGHT LANE CLOSURE
STAGES 3B & 4B

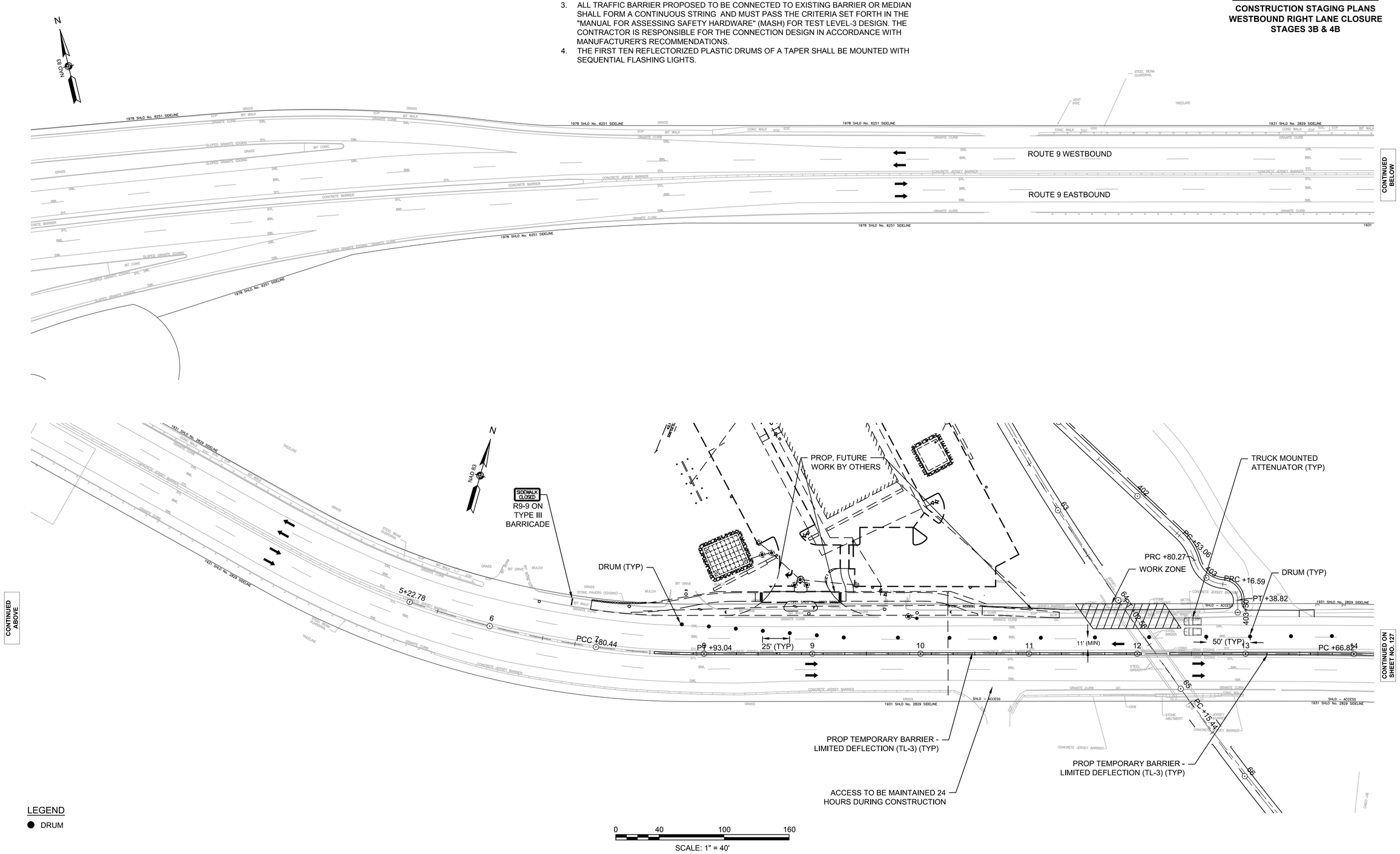

4570 STAGING PLAN - WB RIGHT LANE CLOSURE.DWG Plotted on 20-Aug-2018 2:27 PM

NATICK/FRAMINGHAM
COCHITUATE RAIL TRAIL

STATE	FED. AID PROJ. NO.	SHEET NO.	TOTAL SHEETS
MA	STP(TE)/TAP/CMQ-003S(206)	127	253
PROJECT FILE NO.	607732		

CONSTRUCTION STAGING PLANS
WESTBOUND RIGHT LANE CLOSURE
STAGES 3B & 4B

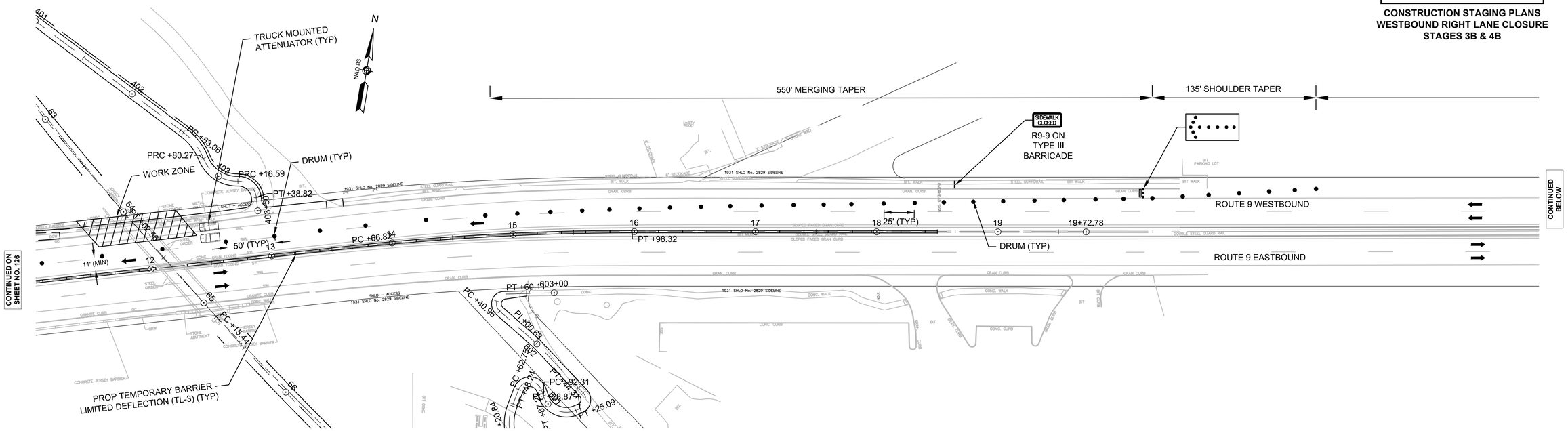

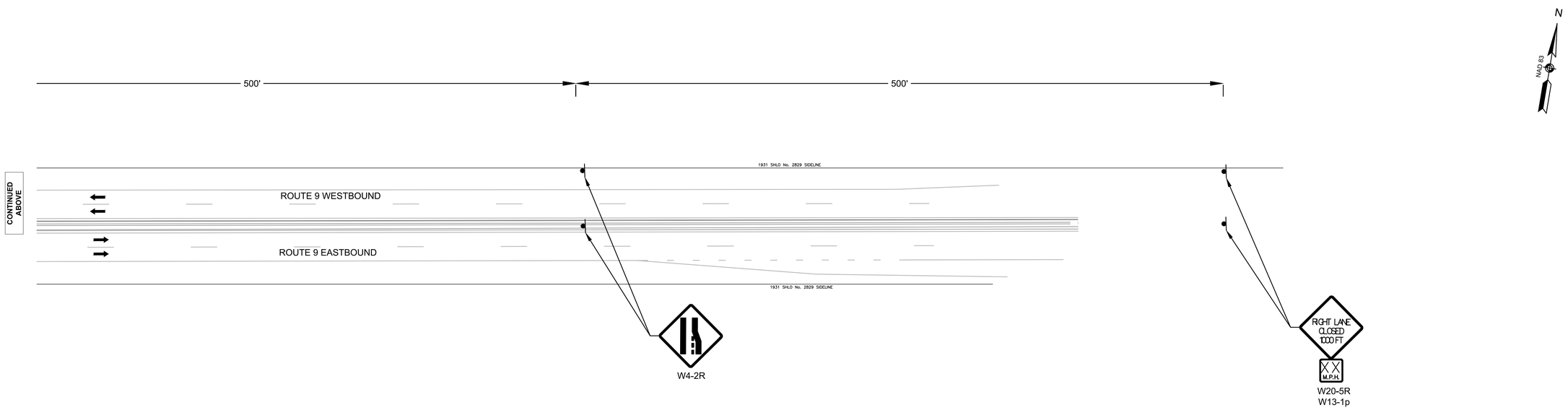

LEGEND
● DRUM

0 40 100 160
SCALE: 1" = 40'

4570 STAGING PLAN - WB RIGHT LANE CLOSURE.DWG Plotted on 20-Aug-2018 2:27 PM

STAGE 3C NOTES:

1. ALL WORK REQUIRING LANE CLOSURES SHALL OCCUR AT NIGHT (SUNDAY - THURSDAY) BETWEEN THE HOURS OF 10PM AND 5AM.
2. EXISTING PEDESTRIAN ACCESS SHALL BE MAINTAINED DURING THIS STAGE.
3. ALL TRAFFIC BARRIER PROPOSED TO BE CONNECTED TO EXISTING BARRIER OR MEDIAN SHALL FORM A CONTINUOUS STRING AND MUST PASS THE CRITERIA SET FORTH IN THE "MANUAL FOR ASSESSING SAFETY HARDWARE" (MASH) FOR TEST LEVEL-3 DESIGN. THE CONTRACTOR IS RESPONSIBLE FOR THE CONNECTION DESIGN IN ACCORDANCE WITH MANUFACTURER'S RECOMMENDATIONS.
4. THE FIRST TEN REFLECTORIZED PLASTIC DRUMS OF A TAPER SHALL BE MOUNTED WITH SEQUENTIAL FLASHING LIGHTS.

NATICK/FRAMINGHAM
COCHITUATE RAIL TRAIL

STATE	FED. AID PROJ. NO.	SHEET NO.	TOTAL SHEETS
MA	STP(TE)/TAP/CMQ-003S(206)	128	253
PROJECT FILE NO.	607732		

CONSTRUCTION STAGING PLANS
MEDIAN WORK ZONE
STAGE 3C

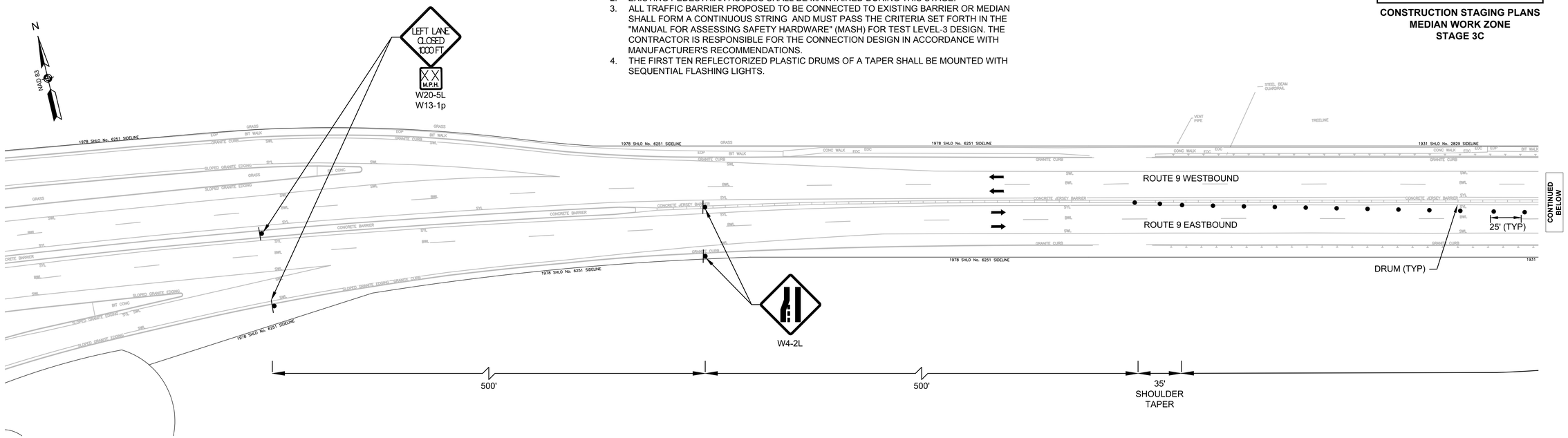

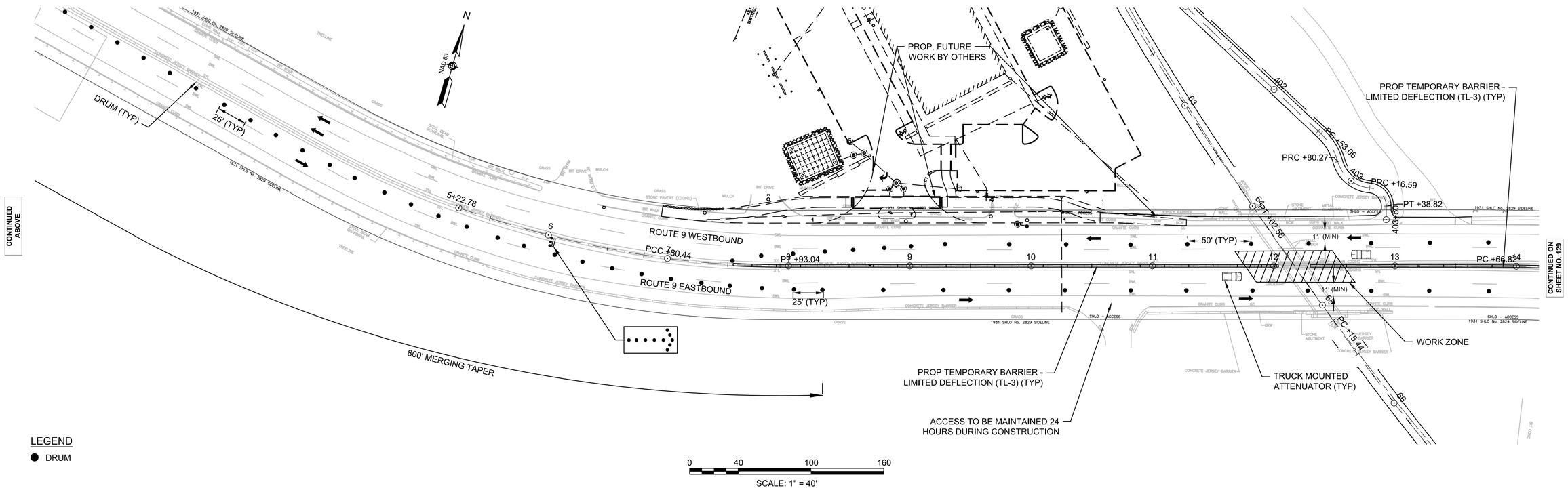

4578 STAGING PLAN - MEDIAN CLOSURE - STAGE 3C.DWG Plotted on 20-Aug-2018 2:27 PM

NATICK/FRAMINGHAM
COCHITUATE RAIL TRAIL

STATE	FED. AID PROJ. NO.	SHEET NO.	TOTAL SHEETS
MA	STP(TE)/TAP/CMQ-003S(206)	129	253
PROJECT FILE NO.	607732		

CONSTRUCTION STAGING PLANS
MEDIAN WORK ZONE
STAGE 3C

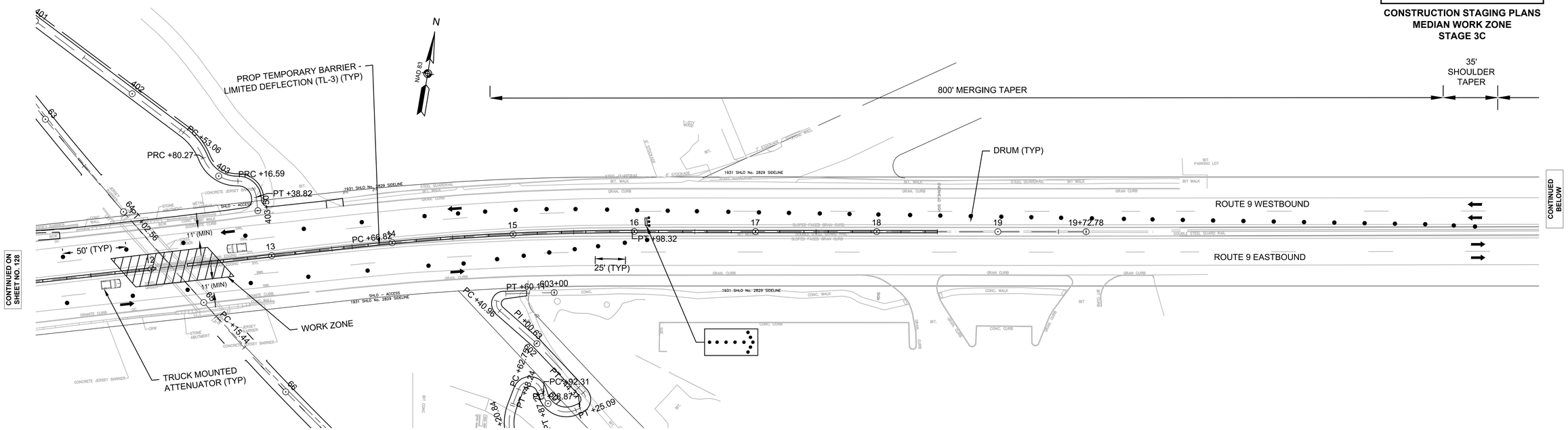

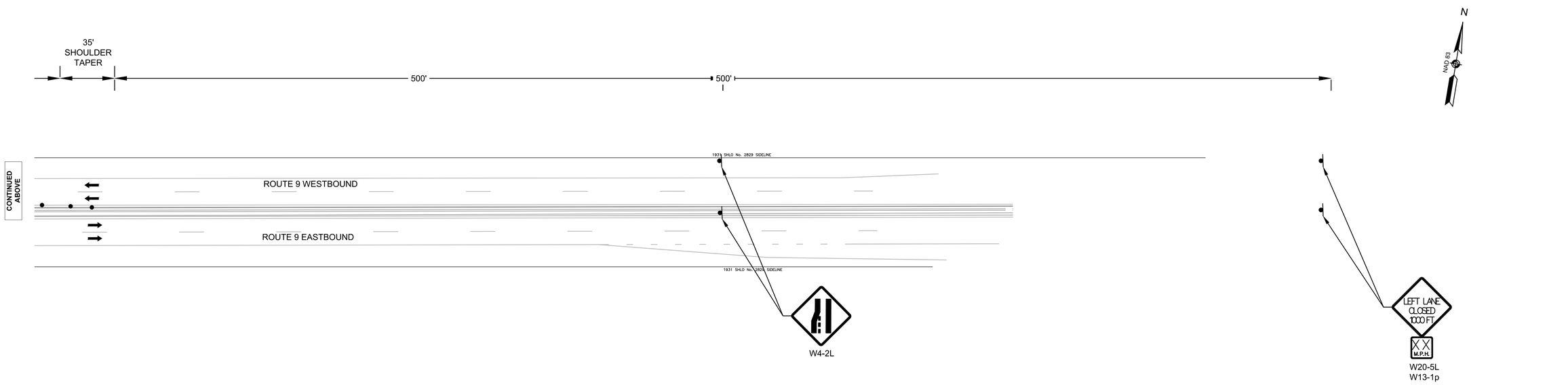

LEGEND
● DRUM

0 40 100 160
SCALE: 1" = 40'

4578 STAGING PLAN - MEDIAN CLOSURE - STAGE 3C.DWG Plotted on 20-Aug-2018 2:28 PM

STAGE 6 NOTES:

1. ALL WORK REQUIRING LANE CLOSURES SHALL OCCUR AT NIGHT (SUNDAY - THURSDAY) BETWEEN THE HOURS OF 10PM AND 5AM.
2. EXISTING PEDESTRIAN ACCESS SHALL BE MAINTAINED DURING THIS STAGE.
3. ALL TRAFFIC BARRIER PROPOSED TO BE CONNECTED TO EXISTING BARRIER OR MEDIAN SHALL FORM A CONTINUOUS STRING AND MUST PASS THE CRITERIA SET FORTH IN THE "MANUAL FOR ASSESSING SAFETY HARDWARE" (MASH) FOR TEST LEVEL-3 DESIGN. THE CONTRACTOR IS RESPONSIBLE FOR THE CONNECTION DESIGN IN ACCORDANCE WITH MANUFACTURER'S RECOMMENDATIONS.
4. THE FIRST TEN REFLECTORIZED PLASTIC DRUMS OF A TAPER SHALL BE MOUNTED WITH SEQUENTIAL FLASHING LIGHTS.

NATICK/FRAMINGHAM
COCHITUATE RAIL TRAIL

STATE	FED. AID PROJ. NO.	SHEET NO.	TOTAL SHEETS
MA	STP(TE)/TAP/CMQ-003S(206)	130	253
PROJECT FILE NO.	607732		

CONSTRUCTION STAGING PLANS
LANE SHIFT WORK ZONE
STAGE 6

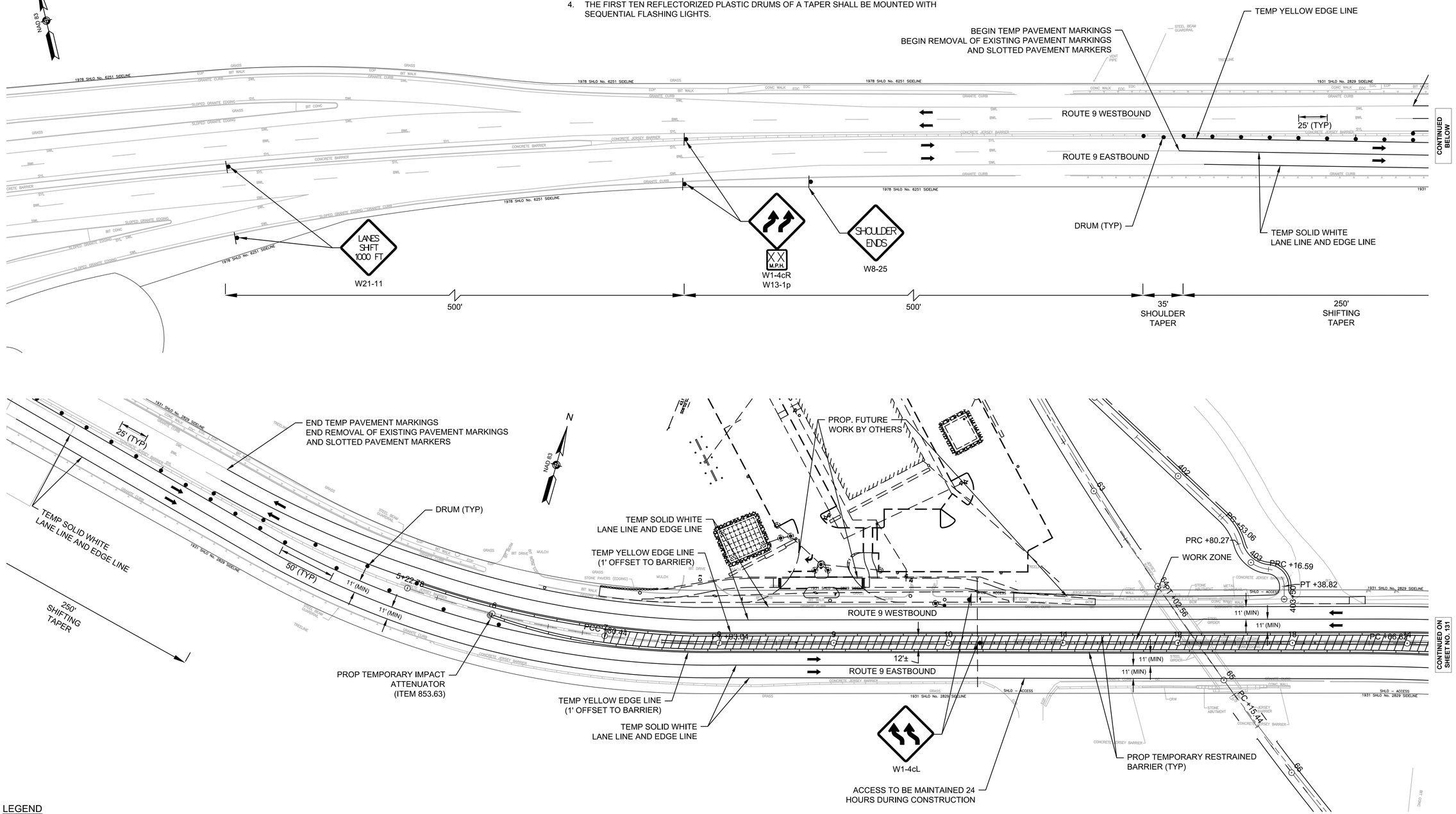

LEGEND
● DRUM

0 40 100 160
SCALE: 1" = 40'

4576 STAGING PLAN - MEDIAN CLOSURE - STAGE 6A.DWG Plotted on 20-Aug-2018 2:28 PM

NATICK/FRAMINGHAM
COCHITUATE RAIL TRAIL

STATE	FED. AID PROJ. NO.	SHEET NO.	TOTAL SHEETS
MA	STP(TE)/TAP/CMQ-003S(206)	131	253
PROJECT FILE NO.	607732		

CONSTRUCTION STAGING PLANS
LANE SHIFT WORK ZONE
STAGE 6

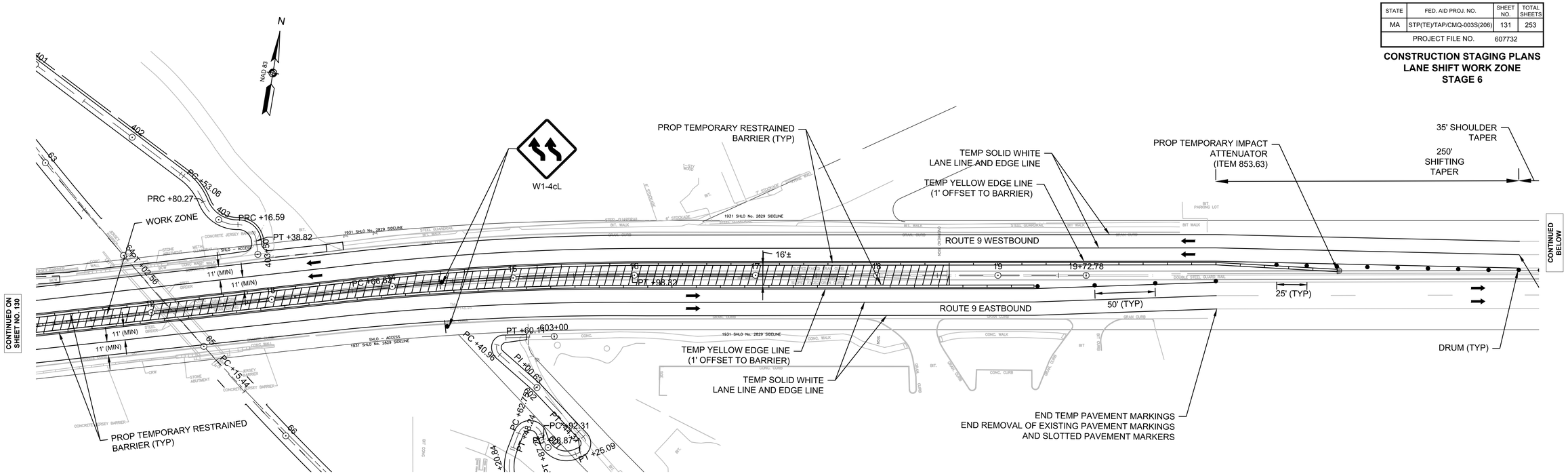

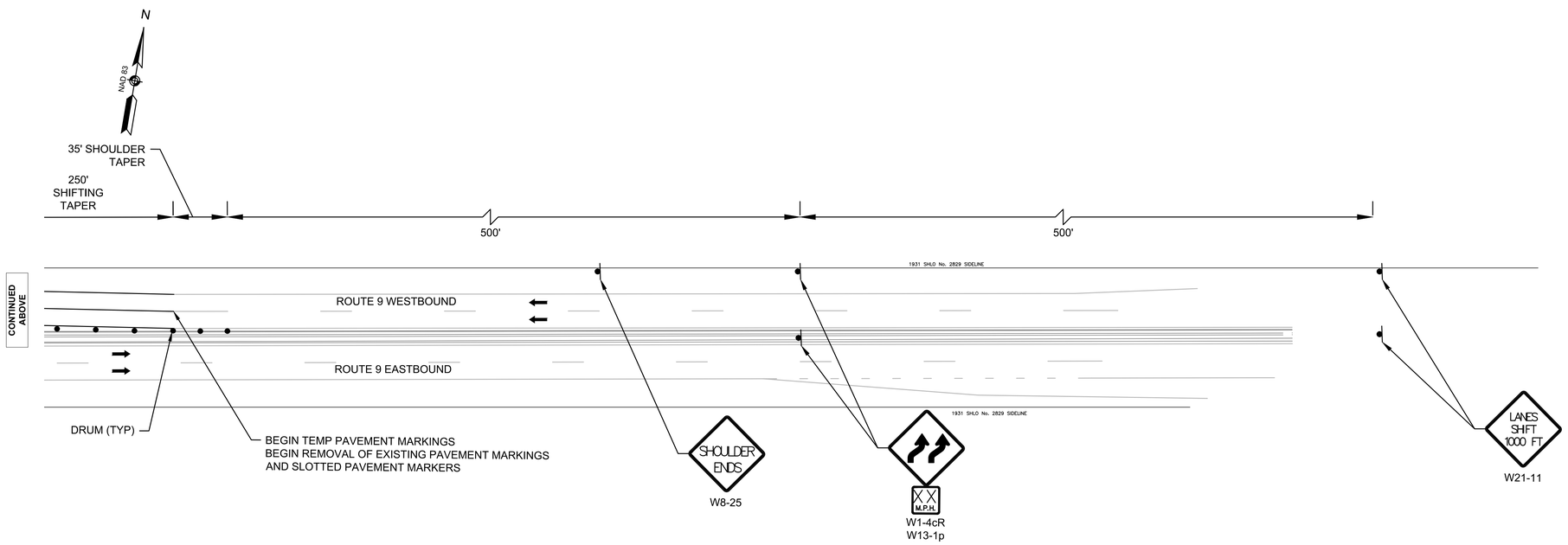

LEGEND

● DRUM

0 40 100 160

SCALE: 1" = 40'

NATICK/FRAMINGHAM
COCHITUATE RAIL TRAIL

STATE	FED. AID PROJ. NO.	SHEET NO.	TOTAL SHEETS
MA	STP(TE)/TAP/CMQ-003S(206)	132	253
PROJECT FILE NO.	607732		

TEMPORARY TRAFFIC CONTROL PLAN
DETOUR PLAN
ROUTE 30

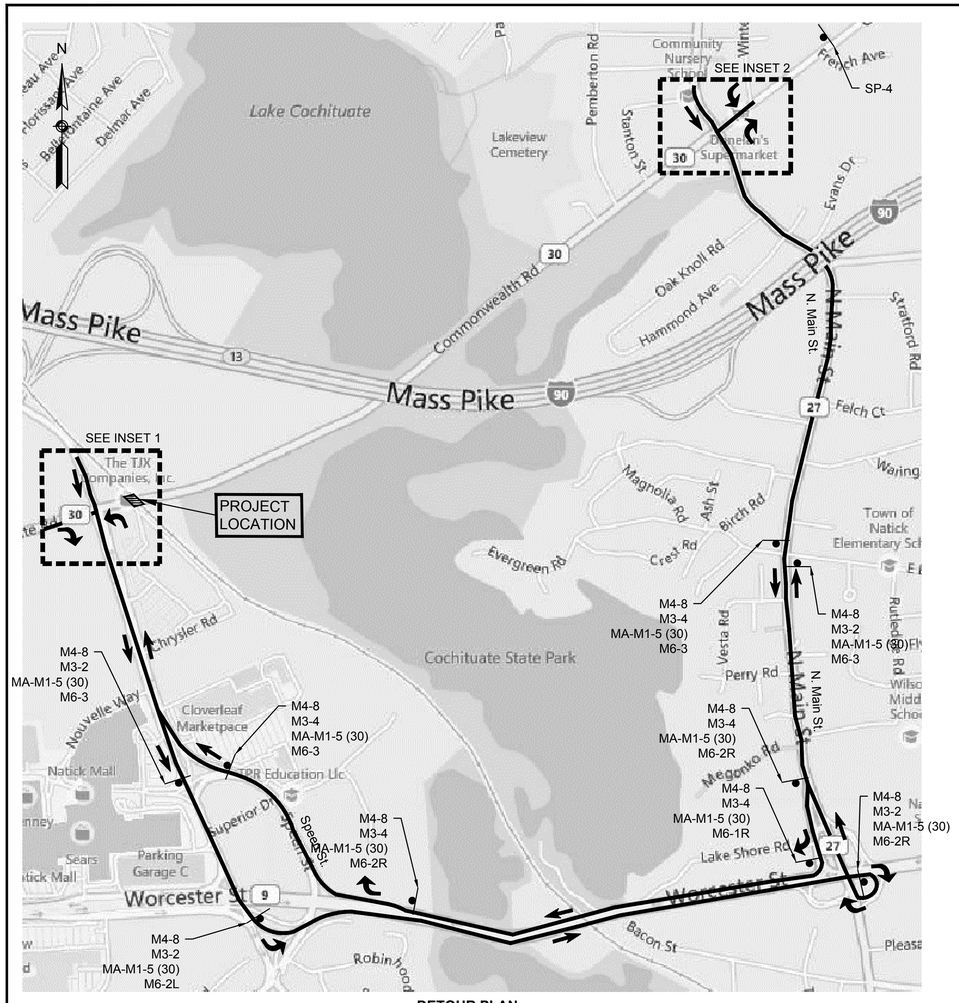

DETOUR PLAN

0 1000 2000 3000 4000

SCALE: 1" = 1000'

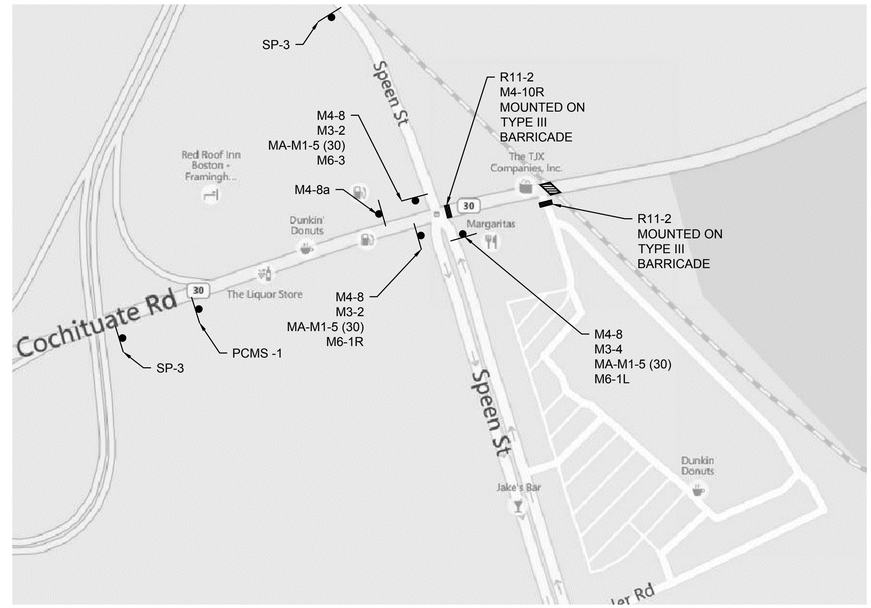

INSET - 1
SCALE: 1" = 250'

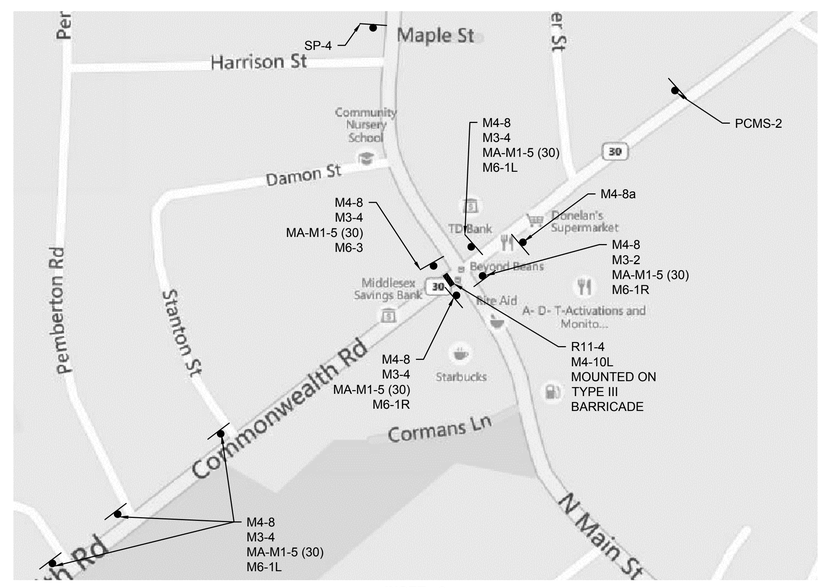

INSET - 2
SCALE: 1" = 250'

ROUTE 30 DETOUR NOTES:

1. ROUTE 30 FULL CLOSURE IS REQUIRED FOR TRUSS ERECTION.
2. ROUTE 30 FULL CLOSURE IS LIMITED TO ONE NIGHT (SUNDAY-THURSDAY) BETWEEN THE HOURS OF 10 PM AND 5 AM. ROUTE 30 SHALL BE FULLY REOPENED TO TRAFFIC IN BOTH DIRECTIONS BY 5 AM.
3. ALL SIGNS SHALL BE COVERED WHEN DETOUR IS NOT IN USE.
4. NO ALTERATION SHALL BE UNDERTAKEN WHICH DECREASES OR HAS THE EFFECT OF DECREASING ACCESSIBILITY OR USABILITY OF A FACILITY.
5. EXISTING PEDESTRIAN ACCESS SHALL BE MAINTAINED DURING ROUTE 30 FULL CLOSURE. PEDESTRIAN SHUTTLE SHALL BE PROVIDED DURING FULL CLOSURE.

	PANEL 1	PANEL 2
PCMS 1	ROUTE 30	WEEK OF
PCMS 2	NIGHT	XXXX
	CLOSURE	

PORTABLE CHANGEABLE MESSAGE SIGNS

NOTE:

PORTABLE CHANGEABLE MESSAGE SIGN SHALL BE PLACED ONE WEEK PRIOR TO DETOUR IMPLEMENTATION.

4576 TTCP 4-5 DETOUR PLAN RT 30.DWG Plotted on 21-Aug-2018 11:29 AM

DETOUR SIGNING

IDENTIFICATION NUMBER	SIZE OF SIGN WIDTH	SIZE OF SIGN HEIGHT	TEXT	DIMENSIONS (in) LETTER HEIGHT	DIMENSIONS (in) VERTICAL SPACING	DIMENSIONS (in) ARROW	NUMBER OF SIGNS REQUIRED	COLOR BACK-GROUND	COLOR LEGEND	COLOR BORDER	POST SIZE AND NUMBER REQUIRED	UNIT AREA IN SQUARE FEET	AREA IN SQUARE FEET
R11-2	48 in	30 in	ROAD CLOSED	8D 8D	5 4 5		4	WHITE	BLACK	BLACK	MOUNT 2 W/ BARRICADE 2 W/ TRUCK ATTENUATOR	10.0	40.0
R11-4	60 in	30 in	ROAD CLOSED TO THRU TRAFFIC	6C 5C 6C	4 2.5 2.5 4		1	WHITE	BLACK	BLACK	MOUNT ON BARRICADE	12.5	12.5
W20-3a	36 in	36 in	ROAD CLOSED 1000 FT	5D 5D 5D	3.5 3.75		2	ORANGE	BLACK	BLACK	P-5 2	9.0	18.0
W20-3b	36 in	36 in	ROAD CLOSED 500 FT	5D 5D 5D	3.5 3.75		2	ORANGE	BLACK	BLACK	P-5 2	9.0	18.0
MA-M1-5 (30)	24 in	24 in	30	12D	6 6		19	WHITE	BLACK	BLACK	MOUNT W/ M4-8	4.0	76.0
M3-2	24 in	12 in	EAST	7C/6C	2.5 2.5		7	WHITE	BLACK	BLACK	MOUNT W/ M4-8	2.0	14.0
M3-4	24 in	12 in	WEST	7C/6C	2.5 2.5		12	WHITE	BLACK	BLACK	MOUNT W/ M4-8	2.0	24.0
M4-8	24 in	12 in	DETOUR	6B	3 3		19	ORANGE	BLACK	BLACK	P-5 19	2.0	38.0
M4-8a	24 in	18 in	END DETOUR	4D 4D	3.5 3 3.5		2	ORANGE	BLACK	BLACK	P-5 2	3.0	6.0
M4-10L	48 in	18 in	DETOUR	6D	SEE 2009 MUTCD STANDARDS	SEE 2009 MUTCD STANDARDS	1	ORANGE	BLACK	BLACK	MOUNT ON BARRICADE	6.0	6.0
M4-10R	48 in	18 in	DETOUR	6D			1	ORANGE	BLACK	BLACK	MOUNT ON BARRICADE	6.0	6.0
M6-1L	21 in	15 in					5	WHITE	BLACK	BLACK	MOUNT W/ M4-8	2.2	11.0
M6-1R	21 in	15 in					4	WHITE	BLACK	BLACK	MOUNT W/ M4-8	2.2	8.8
M6-2L	21 in	15 in					1	WHITE	BLACK	BLACK	MOUNT W/ M4-8	2.2	2.2
M6-2R	21 in	15 in					3	WHITE	BLACK	BLACK	MOUNT W/ M4-8	2.2	6.6
M6-3	21 in	15 in					6	WHITE	BLACK	BLACK	MOUNT W/ M4-8	2.2	13.2
SP-3	66 in	30 in	ROUTE 30 EAST ROAD CLOSED FOLLOW DETOUR	6C 5C 4C	4.5 3 3 4.5		2	WHITE	BLACK	BLACK	P-5 (2) 2	13.75	27.5
SP-4	66 in	30 in	ROUTE 30 WEST ROAD CLOSED FOLLOW DETOUR	6C 5C 4C	4.5 3 3 4.5		2	WHITE	BLACK	BLACK	P-5 (2) 2	13.75	13.75

NOTES:

1. SEE THE CURRENT "MANUAL ON UNIFORM TRAFFIC CONTROL DEVICES" AND "STANDARD HIGHWAY SIGNS" FOR THE LATEST SPECIFICATIONS ON TEXT DIMENSIONS AND COLOR. (ALSO SEE SECTION M9.30.0 TYPE III MHD STANDARD SPECIFICATION, THE "MASSACHUSETTS MANUAL OF UNIFORM TRAFFIC CONTROL DEVICES," AND "GUIDE SIGN POLICY FOR SECONDARY STATE HIGHWAYS" (LATEST EDITIONS) BY THE MASSACHUSETTS HIGHWAY DEPARTMENT).
2. ALL P5 POSTS SHALL BE TELESCOPIC, RECTANGULAR TYPE POSTS, CONFORMING TO THE DIMENSIONS AND REQUIREMENTS OF THE MHD "STANDARD DRAWINGS FOR SIGNS AND SUPPORTS" (LATEST EDITION).

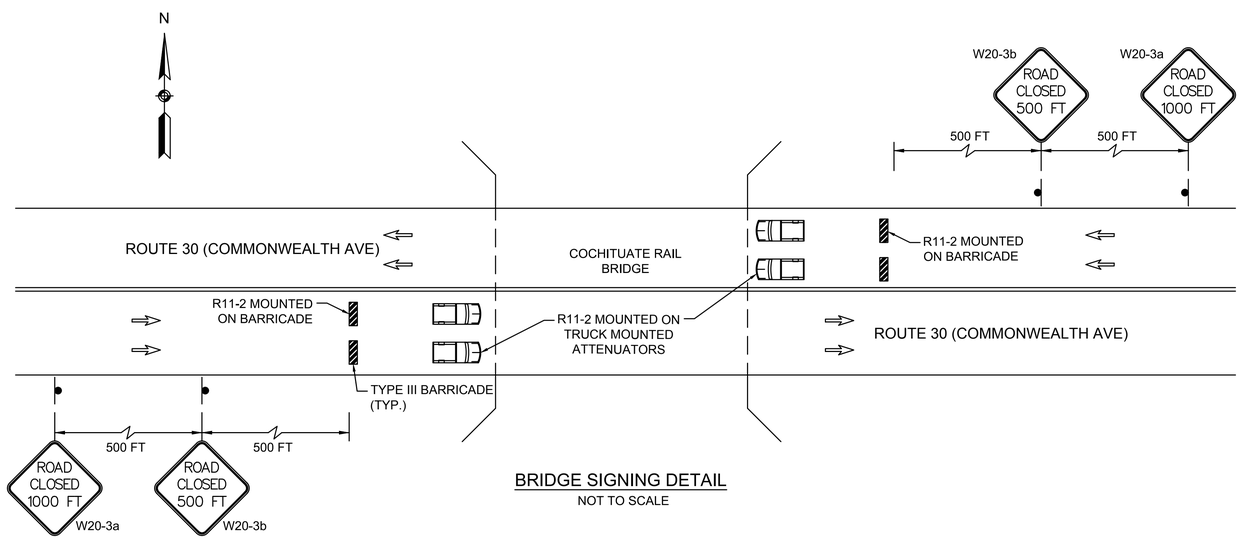

BRIDGE SIGNING DETAIL
NOT TO SCALE

4576 TTCP 4-5 DETOUR PLAN RT 30.DWG Plotted on 20-Aug-2018 2:28 PM

NATICK/FRAMINGHAM
COCHITUATE RAIL TRAIL

STATE	FED. AID PROJ. NO.	SHEET NO.	TOTAL SHEETS
MA	STP(TE)/TAP/CMQ-003S(206)	134	253
PROJECT FILE NO.	607732		

TEMPORARY TRAFFIC CONTROL PLAN
DETOUR PLAN
ROUTE 9

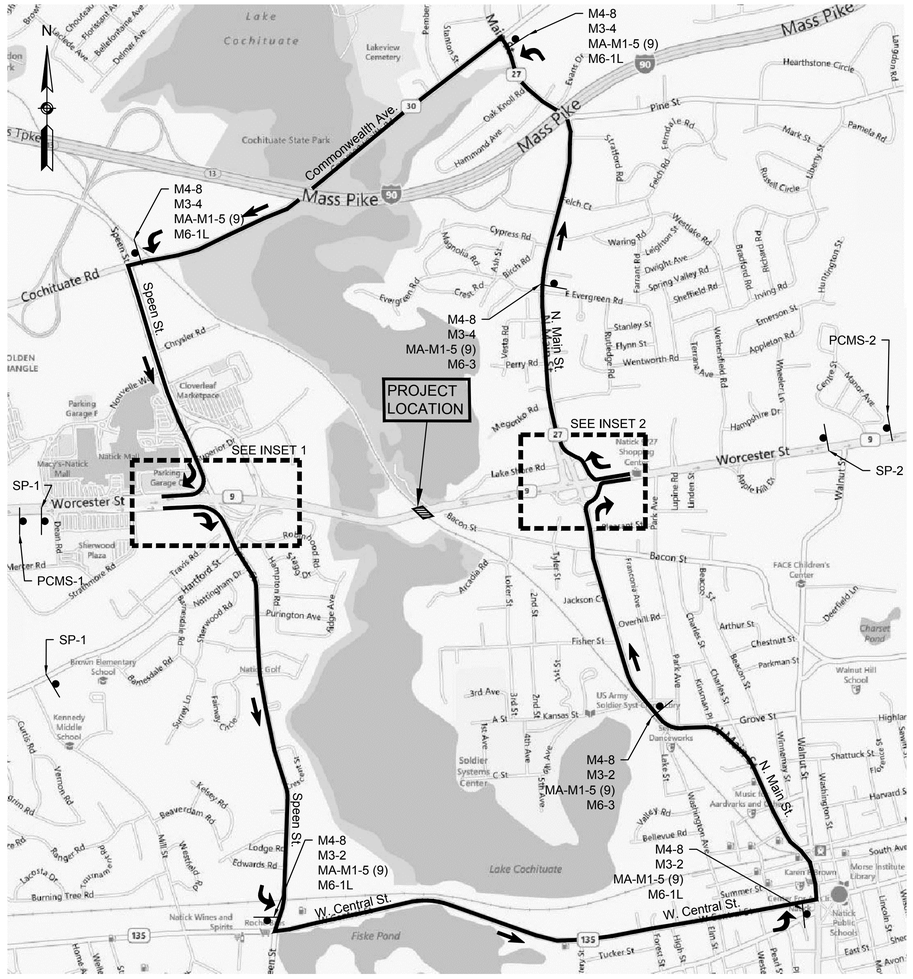

DETOUR PLAN

0 1000 2000 3000 4000

SCALE: 1" = 1000'

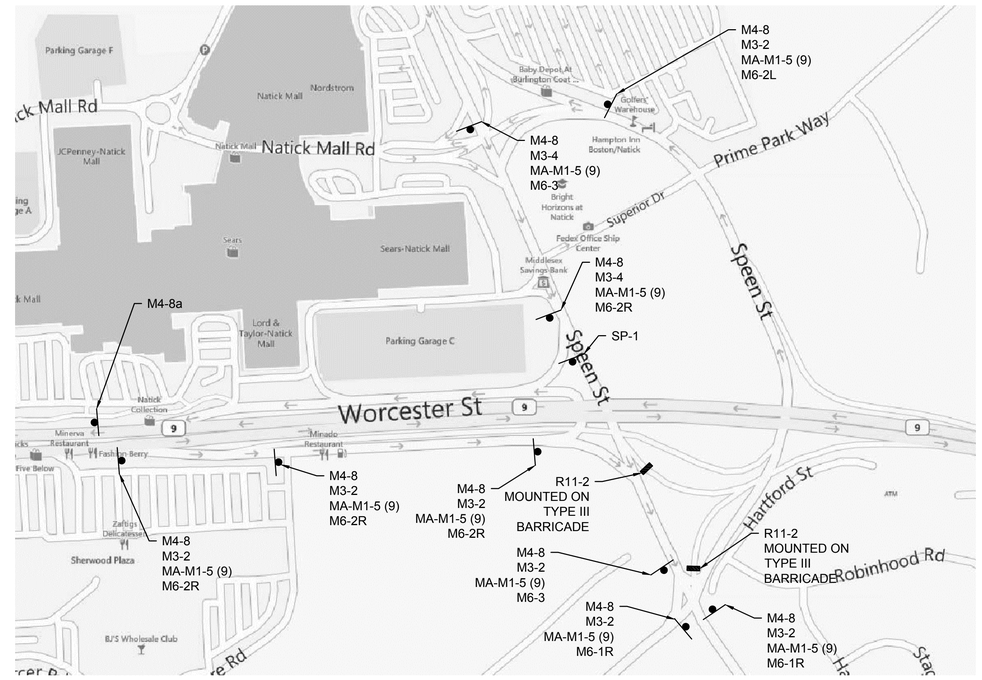

INSET - 1
SCALE: 1" = 250'

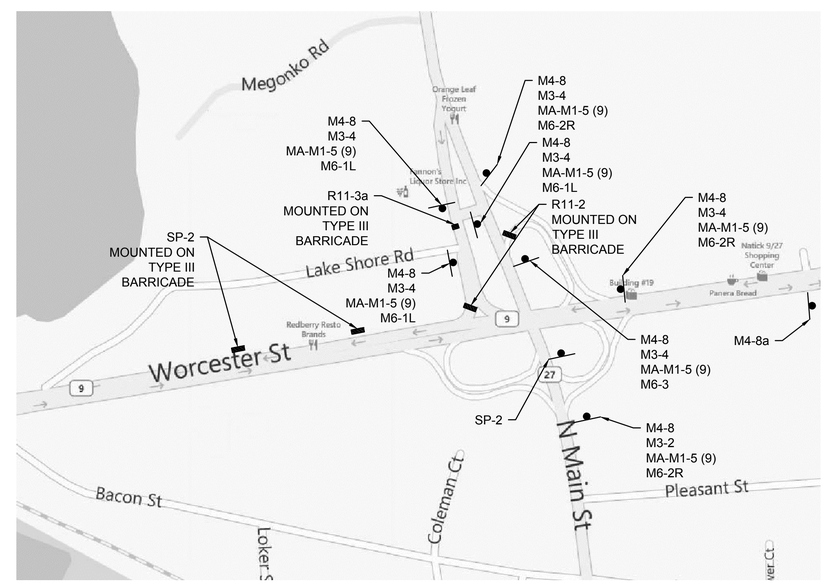

INSET - 2
SCALE: 1" = 250'

ROUTE 9 DETOUR NOTES:

1. ROUTE 9 FULL CLOSURE IS REQUIRED FOR TRUSS ERECTION ONLY.
2. ROUTE 9 FULL CLOSURE IS ALLOWED ONLY BETWEEN THE HOURS OF 10 PM AND 5 AM (SUNDAY-THURSDAY). ROUTE 9 SHALL BE FULLY REOPENED TO TRAFFIC IN BOTH DIRECTIONS BY 5 AM.
3. ALL SIGNS SHALL BE COVERED WHEN DETOUR IS NOT IN USE.
4. NO ALTERATION SHALL BE UNDERTAKEN WHICH DECREASES OR HAS THE EFFECT OF DECREASING ACCESSIBILITY OR USABILITY OF A FACILITY.
5. EXISTING PEDESTRIAN ACCESS SHALL BE MAINTAINED DURING ROUTE 9 FULL CLOSURE. PEDESTRIAN SHUTTLE SHALL BE PROVIDED DURING FULL CLOSURE.

	PANEL 1	PANEL 2
PCMS 1	R O U T E 9	W E E K O F
PCMS 2	N I G H T	X X X X
	C L O S U R E	

PORTABLE CHANGEABLE MESSAGE SIGNS

NOTE:

PORTABLE CHANGEABLE MESSAGE SIGN SHALL BE PLACED ONE WEEK PRIOR TO DETOUR IMPLEMENTATION.

4576 TTCP 6-7 DETOUR PLAN ROUTE 9.DWG Plotted on 21-Aug-2018 11:26 AM

4576 TTCP 6-7 DETOUR PLAN ROUTE 9.DWG Plotted on 20-Aug-2018 2:29 PM

DETOUR SIGNING

IDENTIFICATION NUMBER	SIZE OF SIGN WIDTH	SIZE OF SIGN HEIGHT	TEXT	DIMENSIONS (in) LETTER HEIGHT	DIMENSIONS (in) VERTICAL SPACING	DIMENSIONS (in) ARROW	NUMBER OF SIGNS REQUIRED	COLOR BACK-GROUND	COLOR LEGEND	COLOR BORDER	POST SIZE AND NUMBER REQUIRED	UNIT AREA IN SQUARE FEET	AREA IN SQUARE FEET
R11-2	48 in	30 in	ROAD CLOSED	8D 8D	5 4 5		6	WHITE	BLACK	BLACK	MOUNT 4 W/ BARRICADE 2 W/ TRUCK ATTENUATOR	10.0	60.0
R11-3a	60 in	30 in	ROAD CLOSED AHEAD LOCAL TRAFFIC ONLY	6C 5C 4C	4 3.375 3.375 4.25		1	WHITE	BLACK	BLACK	MOUNT ON BARRICADE	12.5	12.5
W20-3a	36 in	36 in	ROAD CLOSED 1000 FT	5D 5D 5D	3.5 3.75		2	ORANGE	BLACK	BLACK	P-5 2	9.0	18.0
W20-3b	36 in	36 in	ROAD CLOSED 500 FT	5D 5D 5D	3.5 3.75		2	ORANGE	BLACK	BLACK	P-5 2	9.0	18.0
MA-M1-5 (9)	24 in	24 in	9	12D	6 6		22	WHITE	BLACK	BLACK	MOUNT W/ M4-8	4.0	88.0
M3-2	24 in	12 in	EAST	7C/6C	2.5 2.5		11	WHITE	BLACK	BLACK	MOUNT W/ M4-8	2.0	22.0
M3-4	24 in	12 in	WEST	7C/6C	2.5 2.5		11	WHITE	BLACK	BLACK	MOUNT W/ M4-8	2.0	22.0
M4-8	24 in	12 in	DETOUR	6B	3 3		22	ORANGE	BLACK	BLACK	P-5 22	2.0	44.0
M4-8a	24 in	18 in	END DETOUR	4D 4D	3.5 3 3.5		2	ORANGE	BLACK	BLACK	P-5 2	3.0	6.0
M6-1L	21 in	15 in	←	SEE 2009 MUTCD STANDARDS (1)	SEE 2009 MUTCD STANDARDS (1)	SEE 2009 MUTCD STANDARDS (1)	8	WHITE	BLACK	BLACK	MOUNT W/ M4-8	2.2	17.6
M6-1R	21 in	15 in	→				1	WHITE	BLACK	BLACK	MOUNT W/ M4-8	2.2	2.2
M6-2L	21 in	15 in	↖				1	WHITE	BLACK	BLACK	MOUNT W/ M4-8	2.2	2.2
M6-2R	21 in	15 in	↗				7	WHITE	BLACK	BLACK	MOUNT W/ M4-8	2.2	15.4
M6-3	21 in	15 in	↑				5	WHITE	BLACK	BLACK	MOUNT W/ M4-8	2.2	11.0
SP-1	60 in	30 in	ROUTE 9 EAST ROAD CLOSED FOLLOW DETOUR	6C 5C 4C	4.5 3 3 4.5		3	WHITE	BLACK	BLACK	P-5 (2) 3	12.5	37.5
SP-2	60 in	30 in	ROUTE 9 WEST ROAD CLOSED FOLLOW DETOUR	6C 5C 4C	4.5 3 3 4.5		4	WHITE	BLACK	BLACK	MOUNT 2 W/ BARRICADE 2 ON P-5 (2)	12.5	50.0

NOTES:

1. SEE THE CURRENT "MANUAL ON UNIFORM TRAFFIC CONTROL DEVICES" AND "STANDARD HIGHWAY SIGNS" FOR THE LATEST SPECIFICATIONS ON TEXT DIMENSIONS AND COLOR. (ALSO SEE SECTION M9.30.0 TYPE III MHD STANDARD SPECIFICATION, THE "MASSACHUSETTS MANUAL OF UNIFORM TRAFFIC CONTROL DEVICES," AND "GUIDE SIGN POLICY FOR SECONDARY STATE HIGHWAYS" (LATEST EDITIONS) BY THE MASSACHUSETTS HIGHWAY DEPARTMENT).
2. ALL P5 POSTS SHALL BE TELESCOPIC, RECTANGULAR TYPE POSTS, CONFORMING TO THE DIMENSIONS AND REQUIREMENTS OF THE MHD "STANDARD DRAWINGS FOR SIGNS AND SUPPORTS" (LATEST EDITION).

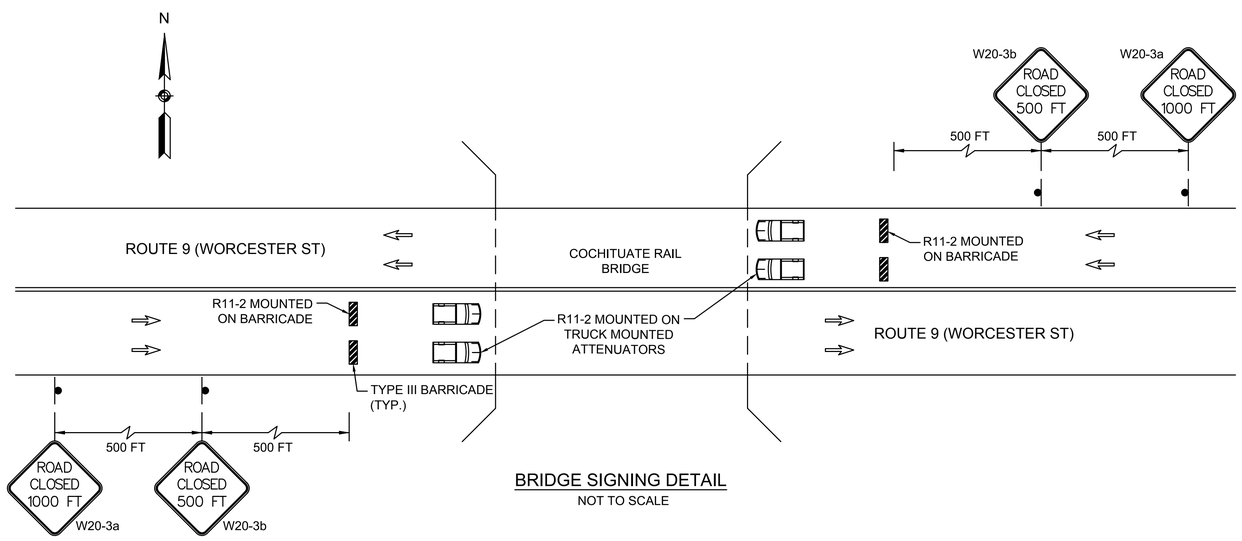

BRIDGE SIGNING DETAIL
NOT TO SCALE

NATICK/FRAMINGHAM
COCHITUATE RAIL TRAIL

STATE	FED. AID PROJ. NO.	SHEET NO.	TOTAL SHEETS
MA	STP(TE)/TAP/CMQ-003S(206)	136	253
PROJECT FILE NO.	607732		

LANDSCAPE PLAN

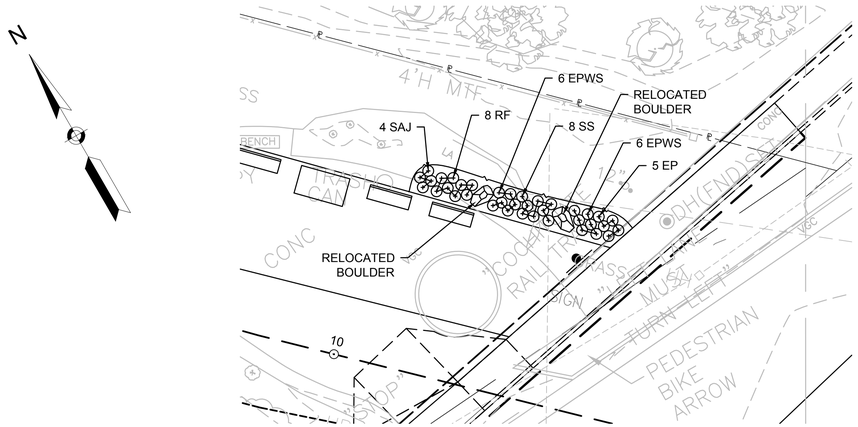

ENLARGEMENT AREA 1

SCALE: 1" = 10' -0"

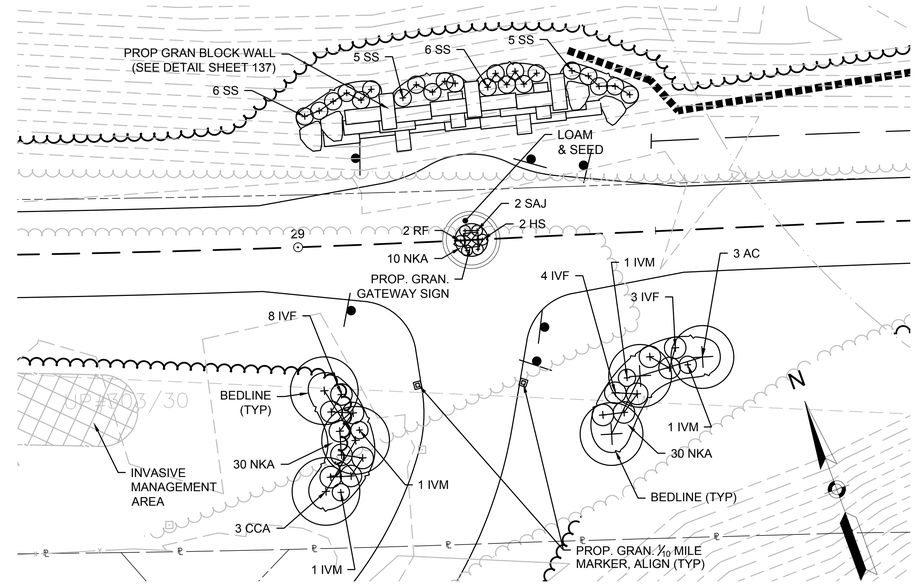

ENLARGEMENT AREA 3

SCALE: 1" = 10' -0"

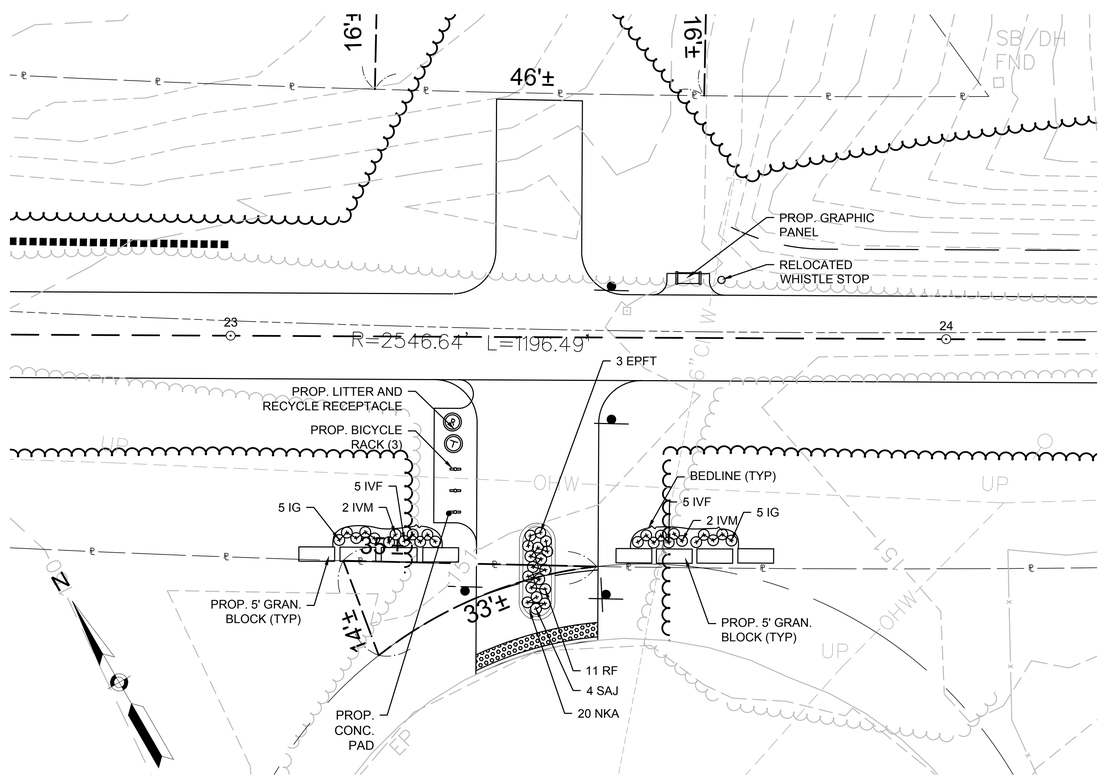

ENLARGEMENT AREA 2

SCALE: 1" = 10' -0"

0 10 25 50

SCALE: 1" = 10'

PLANT LIST - THIS SHEET					
SYM	QTY	BOTANICAL NAME	COMMON NAME	SIZE	REMARKS
TREES					
AC	3	Amelanchier canadensis 'Ace of Hearts'	Shadblow	8'-10'	B&B
CCA	3	Cercis canadensis	Eastern Redbud	1.5"-2" Cal.	B&B
SHRUBS					
IG	10	Ilex glabra	Inkberry	2'-3'	Cont.
IVF	25	Ilex verticillata (Female)	Winterberry Holly	24"-30"	Cont.
IVM	8	Ilex verticillata (Male)	Winterberry Holly	24"-30"	Cont.
GRASSES, PERENNIALS AND BULBS					
EP	5	Echinacea purpurea	Purple Cone Flower	1 GAL.	Cont.
EPWS	12	Echinacea purpurea 'White Swan'	White Swan Cone Flower	1 GAL.	Cont.
EPFT	3	Echinacea purpurea 'Flame Thrower'	Flame Thrower Cone Flower	1 GAL.	Cont.
HS	2	Hemerocallis 'Stella de Oro'	Stella de Oro Daylily	1 GAL.	Cont.
NKA	90	Narcissus 'King Alfred'	King Alfred Daffodil	DN1	3 Bulbs Per Plant Shown
RF	21	Rudbeckia fulgida	Black-Eyed Susan	1 GAL.	Cont.
SS	30	Schizachyrium scoparium	Little Bluestem	2 Gal.	Cont.
SAJ	10	Sedum 'Autumn Joy'	Autumn Joy Sedum	1 GAL.	Cont.

NOTE:
REFER TO SHEET 137 FOR TOTAL PLANT LIST.

4576 LANDSCAPE PLANS.DWG Plotted on 20-Aug-2018 2:29 PM

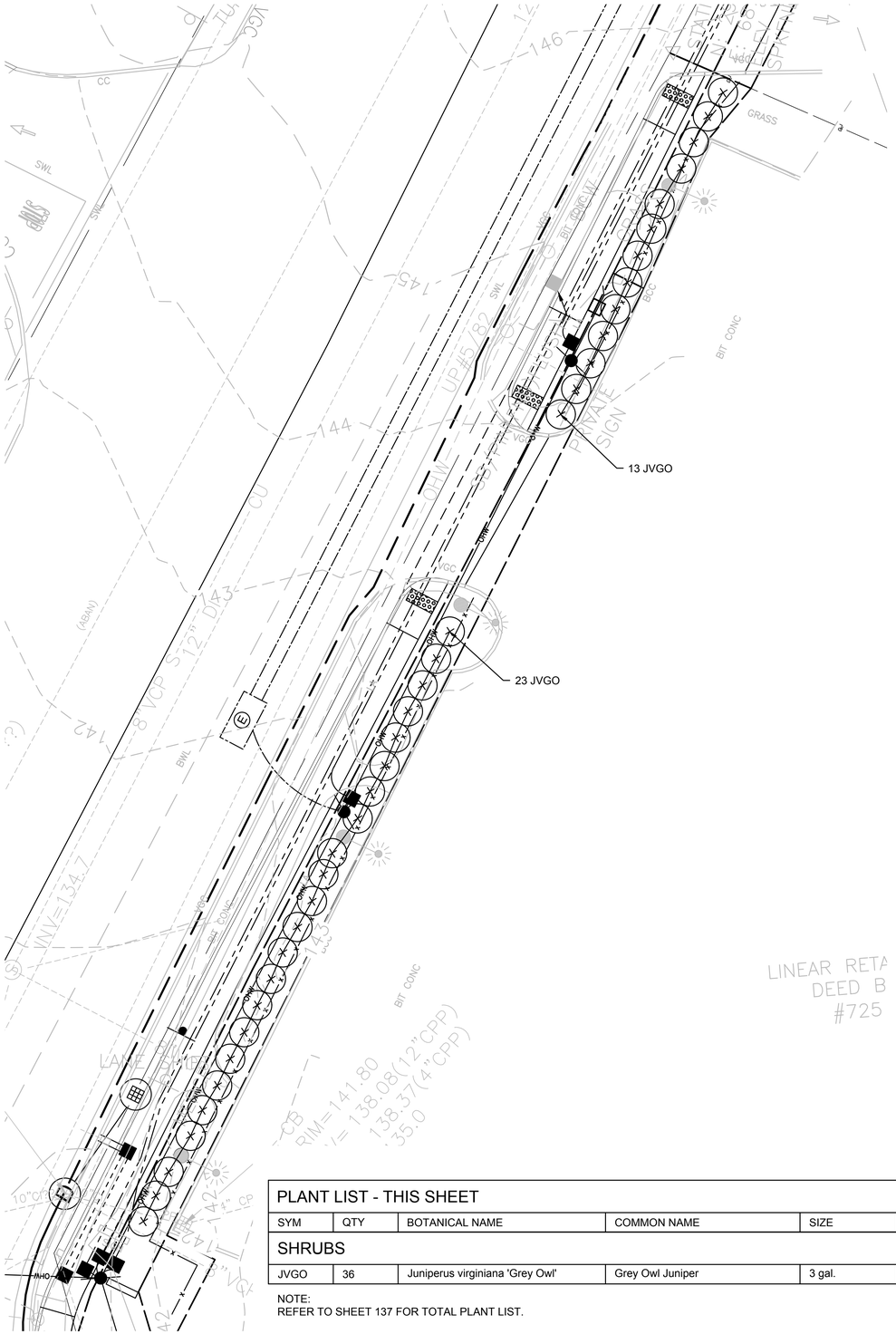

TOTAL PLANT LIST

SYM	QTY	BOTANICAL NAME	COMMON NAME	SIZE	REMARKS
TREES					
AC	28	Amelanchier canadensis 'Ace of Hearts'	Shadblow	8'-10'	B&B
AR	18	Acer rubrum 'October Glory'	Red Maple	2"-2.5" Cal.	B&B
BN	3	Betula nigra	River Birch	12'-14' Ht.	B&B Clump
CCA	4	Cercis canadensis	Eastern Redbud	1.5"-2" Cal.	B&B
CVWK	4	Crataegus viridis 'Winter King'	Winter King Hawthorn	1.5"-2" Cal.	B&B
JK	24	Juniperus chinensis 'Keteleeri"	Keteleeri Juniper	8'-9' Ht.	B&B
LT	2	Liriodendron tulipifera	Tulip Tree	2.5"-3" Cal.	B&B
MRB	2	Malus x 'Red Baron'	Red Baron Crabapple	1.5"-2" Cal.	B&B
NS	4	Nyssa sylvatica	Black Gum	2"-2.5" Cal.	B&B
PCC	5	Pyrus calleryana 'Chanticleer'	Chanticleer Pear	2"-2.5" Cal.	B&B
PO	11	Picea omorika	Serbian Spruce	8'-10' Ht.	B&B
PVW	8	Pinus 'Vanderwolf'	Vanderwolf Pine	10'-12' Ht.	B&B
QC	14	Quercus palustris	Pin Oak	2"-2.5" Cal.	B&B
SHRUBS					
CA	5	Clethra alnifolia 'Ruby Spice'	Summersweet	3'-4'	B&B
FI	38	Forsythia intermedia	Forsythia	3'-4'	B&B
HV	22	Hamamelis virginiana	Witch Hazel	3'-4'	Cont.
IG	12	Ilex glabra	Inkberry	2'-3'	Cont.
IVF	37	Ilex verticillata (Female)	Winterberry Holly	24"-30"	Cont.
IVM	11	Ilex verticillata (Male)	Winterberry Holly	24"-30"	Cont.
RCW	12	Rhododendron 'Cunningham's White'	Cunningham's White Rhododendron	3'-4'	B&B
RP	10	Rhododendron x P.J.M.	PJM Rhododendron	24"-30"	B&B
RR	35	Rosa 'Radsunny'	Sunny Knock Out Rose	2 GAL	CONT
SV	26	Syringa x 'Penda'	Lilac	3'-4'	B&B
JVGO	36	Juniperus virginiana 'Grey Owl'	Grey Owl Juniper	3 GAL.	B&B
GRASSES, PERENNIALS AND BULBS					
EP	38	Echinacea purpurea	Purple Cone Flower	1 GAL.	Cont.
EPWS	15	Echinacea purpurea 'White Swan'	White Swan Cone Flower	1 GAL.	Cont.
EPFT	8	Echinacea purpurea 'Flame Thrower'	Flame Thrower Cone Flower	1 GAL.	Cont.
HS	46	Hemerocallis 'Stella de Oro'	Stella de Oro Daylily	1 GAL.	Cont.
NKA	470	Narcissus 'King Alfred'	King Alfred Daffodil	DN1	3 Bulbs Per Plant Shown
PV	80	Panicum virgatum 'Cheyenne Sky'	Cheyenne Sky Switchgrass	2 Gal.	Cont.
RF	76	Rudbeckia fulgida	Black-Eyed Susan	1 GAL.	Cont.
SS	86	Schizachyrium scoparium	Little Bluestem	2 Gal.	Cont.
SAJ	19	Sedum 'Autumn Joy'	Autumn Joy Sedum	1 GAL.	Cont.

NATICK/FRAMINGHAM
COCHITUATE RAIL TRAIL

STATE	FED. AID PROJ. NO.	SHEET NO.	TOTAL SHEETS
MA	STP(TE)/TAP/CMQ-003S(206)	137	253
PROJECT FILE NO.	607732		

LANDSCAPE PLAN

PLANT LIST - THIS SHEET

SYM	QTY	BOTANICAL NAME	COMMON NAME	SIZE	REMARKS
SHRUBS					
JVGO	36	Juniperus virginiana 'Grey Owl'	Grey Owl Juniper	3 gal.	B&B

NOTE:
REFER TO SHEET 137 FOR TOTAL PLANT LIST.

0 10 25 50
SCALE: 1" = 10'

ENLARGEMENT AREA 4

SCALE: 1" = 10' -0"

4576 LANDSCAPE PLANS.DWG Plotted on 20-Aug-2018 2:29 PM

PLANT LIST - THIS SHEET					
SYM	QTY	BOTANICAL NAME	COMMON NAME	SIZE	REMARKS
TREES					
AC	3	Amelanchier canadensis 'Ace of Hearts'	Shadblow	8'-10'	B&B
NS	3	Nyssa sylvatica	Black Gum	2"-2.5" Cal.	B&B
QC	11	Quercus palustris	Pin Oak	2"-2.5" Cal.	B&B
SHRUBS					
HV	10	Hamamelis virginiana	Witch Hazel	3'-4'	Cont.
IVF	6	Ilex verticillata (Female)	Winterberry Holly	24"-30"	Cont.
IVM	3	Ilex verticillata (Male)	Winterberry Holly	24"-30"	Cont.
GRASSES, PERENNIALS AND BULBS					
RF	11	Rudbeckia fulgida	Black-Eyed Susan	1 GAL.	Cont.

NOTE:
REFER TO SHEET 137 FOR TOTAL PLANT LIST.

NATICK/FRAMINGHAM
COCHITUATE RAIL TRAIL

STATE	FED. AID PROJ. NO.	SHEET NO.	TOTAL SHEETS
MA	STP(TE)TAP/CMQ-003S(206)	138	253
PROJECT FILE NO.	607732		

LANDSCAPE PLAN

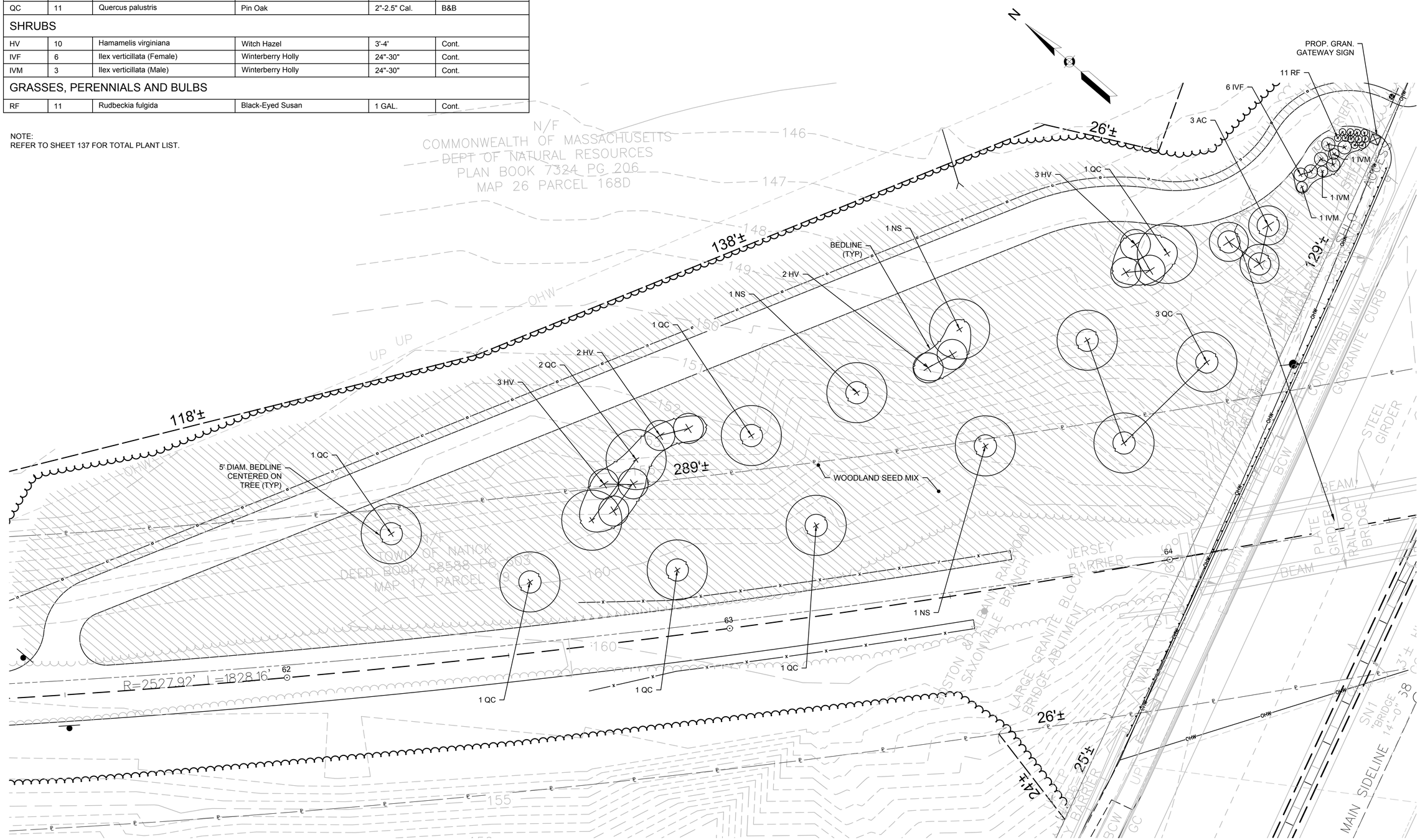

0 10 25 50
SCALE: 1" = 10'

ENLARGEMENT AREA 5

SCALE: 1" = 10' -0"

4576 LANDSCAPE PLANS.DWG Plotted on 20-Aug-2018 2:30 PM

NATICK/FRAMINGHAM
COCHITUATE RAIL TRAIL

STATE	FED. AID PROJ. NO.	SHEET NO.	TOTAL SHEETS
MA	STP(TE)/TAP/CMQ-003S(206)	139	253
PROJECT FILE NO.	607732		

LANDSCAPE PLAN

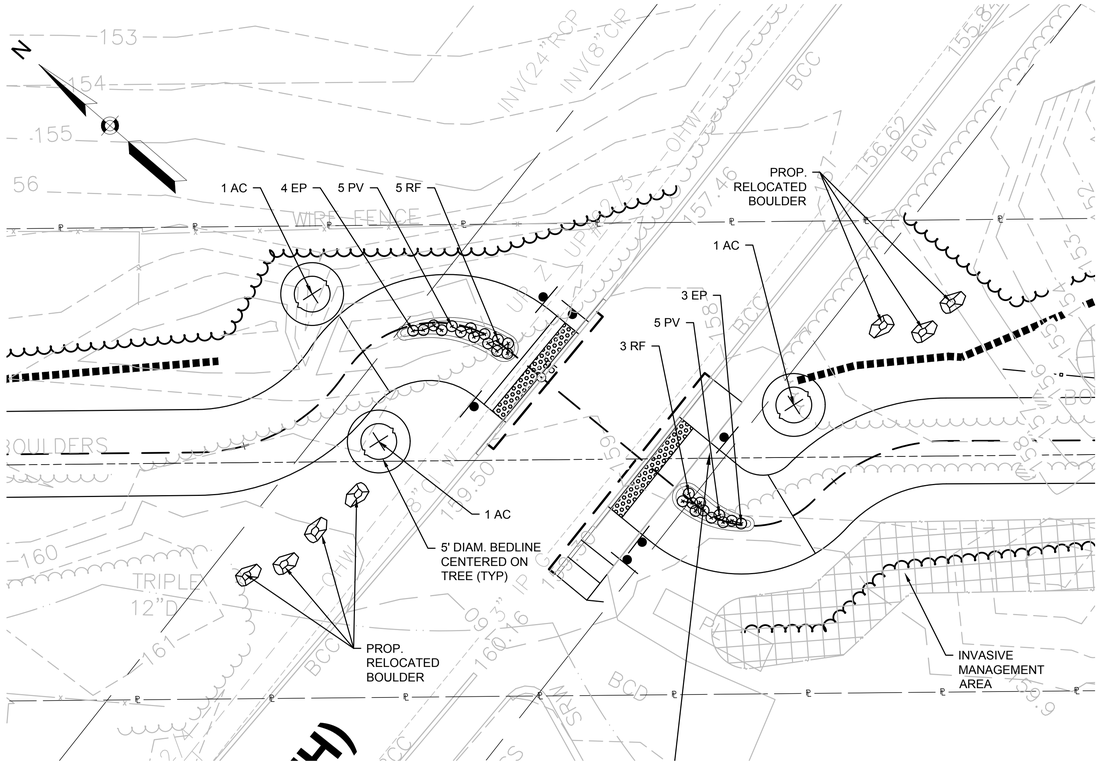

ENLARGEMENT AREA 6

SCALE: 1" = 10' -0"

PLANT LIST - THIS SHEET					
SYM	QTY	BOTANICAL NAME	COMMON NAME	SIZE	REMARKS
TREES					
AC	9	Amelanchier canadensis 'Ace of Hearts'	Shadblow	8'-10'	B&B
SHRUBS					
RP	3	Rhododendron x P.J.M.	PJM Rhododendron	24"-30"	B&B
GRASSES, PERENNIALS AND BULBS					
EP	15	Echinacea purpurea	Purple Cone Flower	1 GAL.	Cont.
PV	10	Panicum virgatum 'Cheyenne Sky'	Cheyenne Sky Switchgrass	2 Gal.	Cont.
RF	14	Rudbeckia fulgida	Black-Eyed Susan	1 GAL.	Cont.
SS	17	Schizachyrium scoparium	Little Bluestem	2 Gal.	Cont.

NOTE:
REFER TO SHEET 137 FOR TOTAL PLANT LIST.

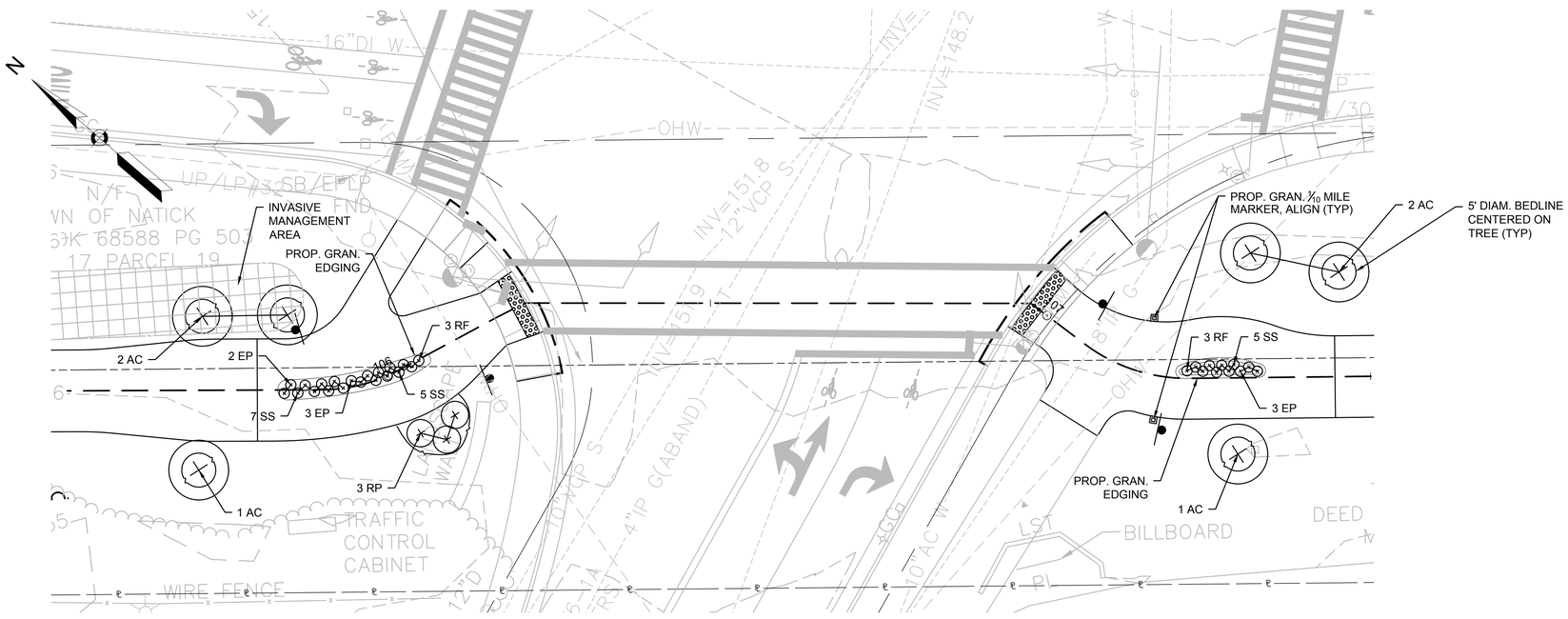

ENLARGEMENT AREA 7

SCALE: 1" = 10' -0"

0 10 25 50
SCALE: 1" = 10'

4576 LANDSCAPE PLANS.DWG Plotted on 20-Aug-2018 2:30 PM

NATICK/FRAMINGHAM
COCHITUATE RAIL TRAIL

STATE	FED. AID PROJ. NO.	SHEET NO.	TOTAL SHEETS
MA	STP(TE)/TAP/CMQ-003S(206)	140	253
PROJECT FILE NO.	607732		

LANDSCAPE PLAN

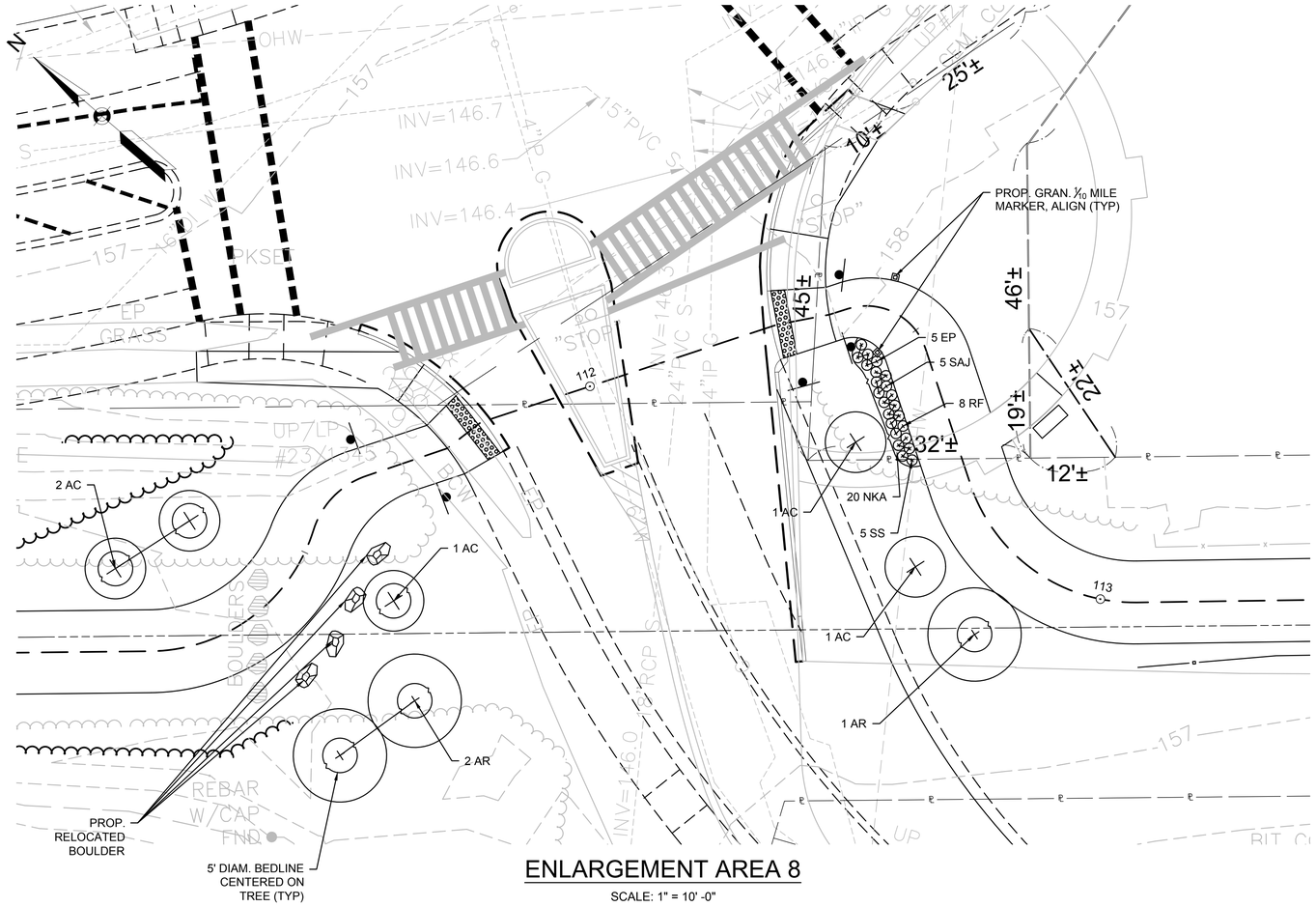

ENLARGEMENT AREA 8

SCALE: 1" = 10' -0"

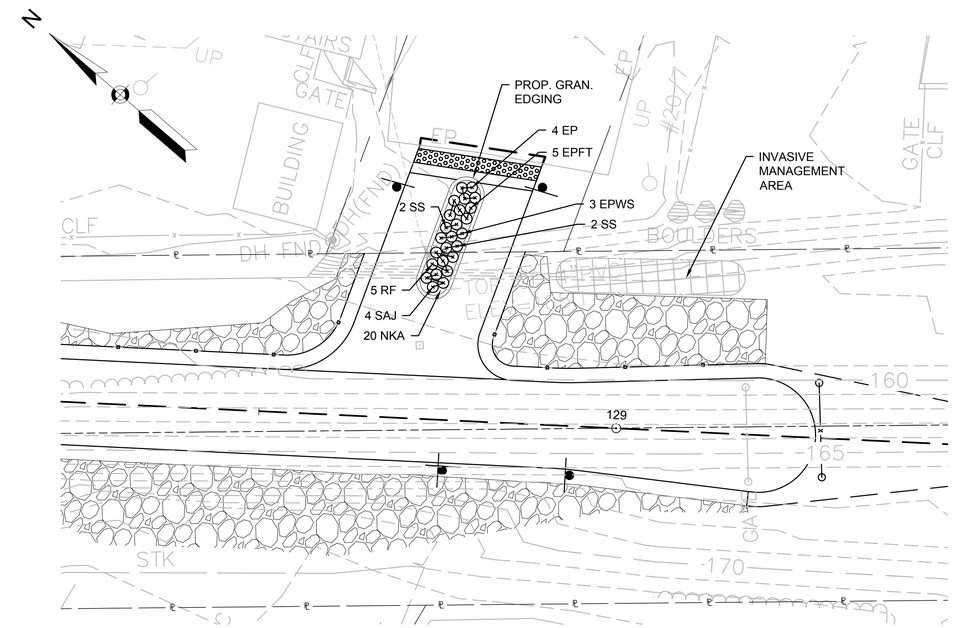

ENLARGEMENT AREA 10

SCALE: 1" = 10' -0"

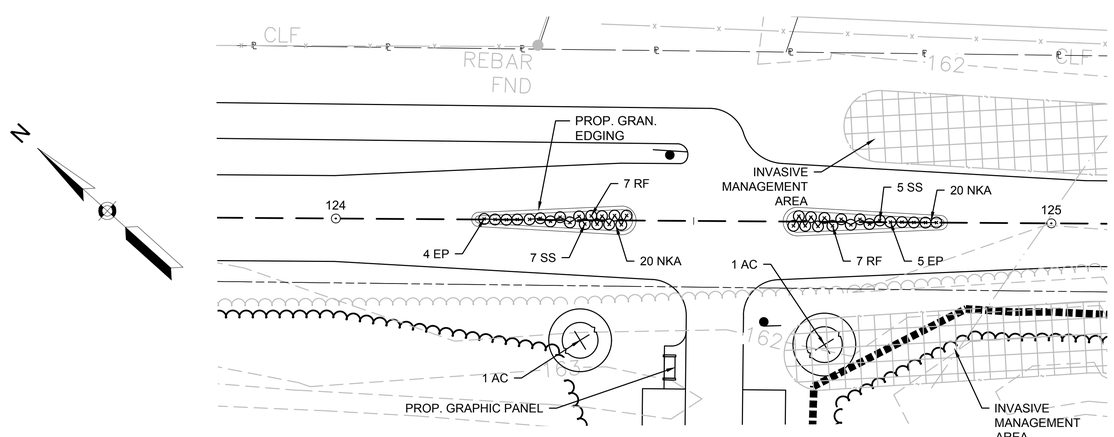

ENLARGEMENT AREA 9

SCALE: 1" = 10' -0"

0 10 25 50

SCALE: 1" = 10'

PLANT LIST - THIS SHEET					
SYM	QTY	BOTANICAL NAME	COMMON NAME	SIZE	REMARKS
TREES					
AC	7	Amelanchier canadensis 'Ace of Hearts'	Shadblow	8'-10'	B&B
AR	3	Acer rubrum 'October Glory'	Red Maple	2"-2.5" Cal.	B&B
GRASSES, PERENNIALS AND BULBS					
EP	18	Echinacea purpurea	Purple Cone Flower	1 GAL.	Cont.
EPWS	3	Echinacea purpurea 'White Swan'	White Swan Cone Flower	1 GAL.	Cont.
EPFT	5	Echinacea purpurea 'Flame Thrower'	Flame Thrower Cone Flower	1 GAL.	Cont.
NKA	80	Narcissus 'King Alfred'	King Alfred Daffodil	DN1	3 Bulbs Per Plant Shown
RF	27	Rudbeckia fulgida	Black-Eyed Susan	1 GAL.	Cont.
SS	21	Schizachyrium scoparium	Little Bluestem	2 Gal.	Cont.
SAJ	9	Sedum 'Autumn Joy'	Autumn Joy Sedum	1 GAL.	Cont.

NOTE:
REFER TO SHEET 137 FOR TOTAL PLANT LIST.

4576 LANDSCAPE PLANS.DWG Plotted on 20-Aug-2018 2:30 PM

NATICK/FRAMINGHAM
COCHITUATE RAIL TRAIL

STATE	FED. AID PROJ. NO.	SHEET NO.	TOTAL SHEETS
MA	STP(TE)/TAP/CMQ-003S(206)	141	253
PROJECT FILE NO.	607732		

SCENIC OVERLOOK PLAN 1

Plotted on 20-Aug-2018 2:31 PM

4576 LANDSCAPE PLANS.DWG

PLANT LIST - THIS SHEET

SYM	QTY	BOTANICAL NAME	COMMON NAME	SIZE	REMARKS
TREES					
AR	1	Acer rubrum 'October Glory'	Red Maple	2"-2.5" Cal.	B&B
BN	3	Betula nigra	River Birch	12'-14' Ht.	B&B Clump
LT	1	Liriodendron tulipifera	Tulip Tree	2.5"-3" Cal.	B&B
NS	1	Nyssa sylvatica	Black Gum	2"-2.5" Cal.	B&B
SHRUBS					
HV	3	Hamamelis virginiana	Witch Hazel	3'-4'	Cont.
IG	2	Ilex glabra	Inkberry	2'-3'	Cont.
IVF	6	Ilex verticillata (Female)	Winterberry Holly	24"-30"	Cont.
RP	7	Rhododendron x P.J.M.	PJM Rhododendron	24"-30"	B&B
GRASSES, PERENNIALS AND BULBS					
HS	8	Hemerocallis 'Stella de Oro'	Stella de Oro Daylily	1 GAL.	Cont.
NKA	220	Narcissus 'King Alfred'	King Alfred Daffodil	DN1	3 Bulbs Per Plant Shown

NOTE:
REFER TO SHEET 137 FOR TOTAL PLANT LIST.

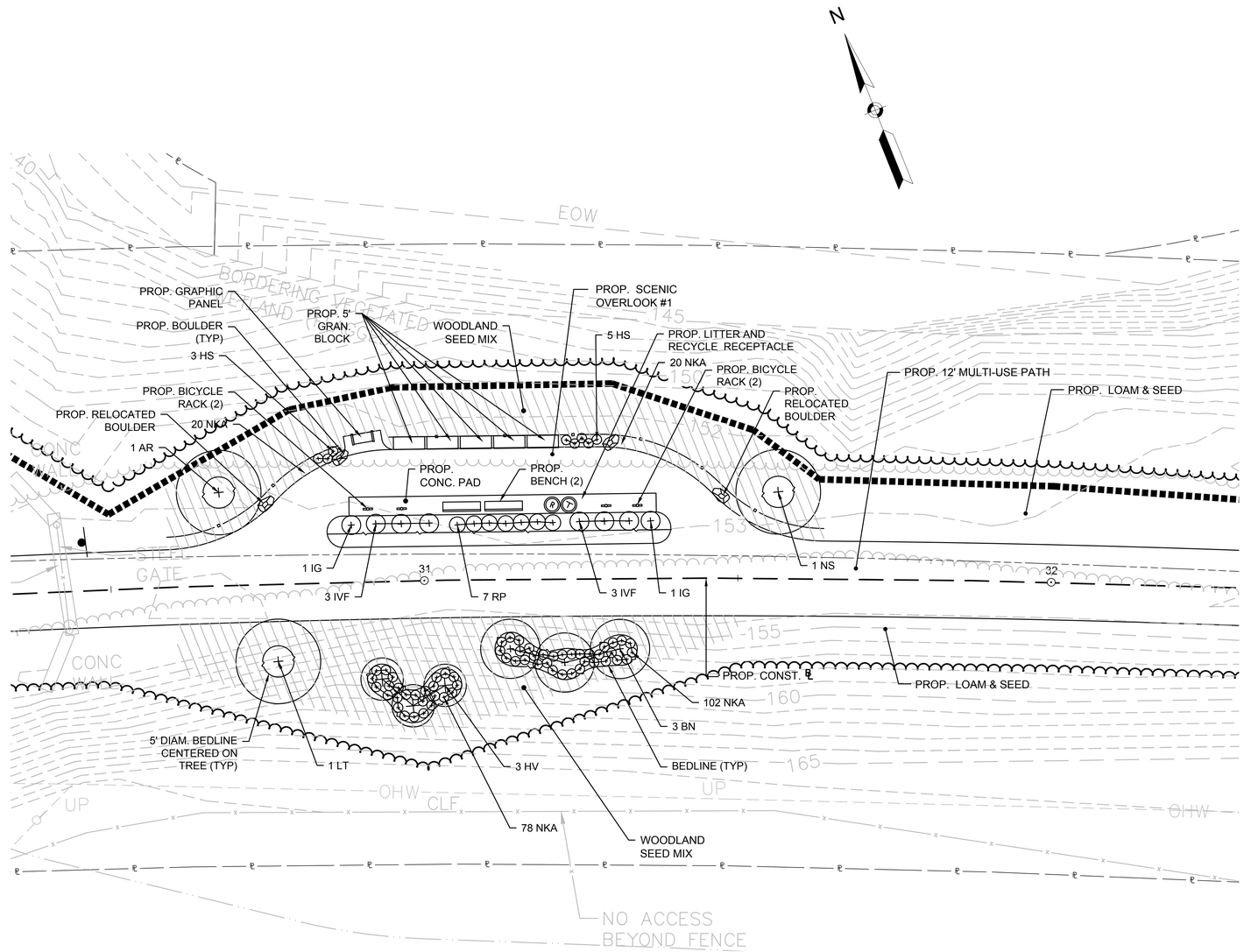

SCENIC OVERLOOK 1

SCALE: 1" = 10' -0"

0 10 25 50

SCALE: 1" = 10'

NATICK/FRAMINGHAM
COCHITUATE RAIL TRAIL

STATE	FED. AID PROJ. NO.	SHEET NO.	TOTAL SHEETS
MA	STP(TE)/TAP/CMQ-003S(206)	142	253
PROJECT FILE NO.	607732		

SCENIC OVERLOOK PLAN 2

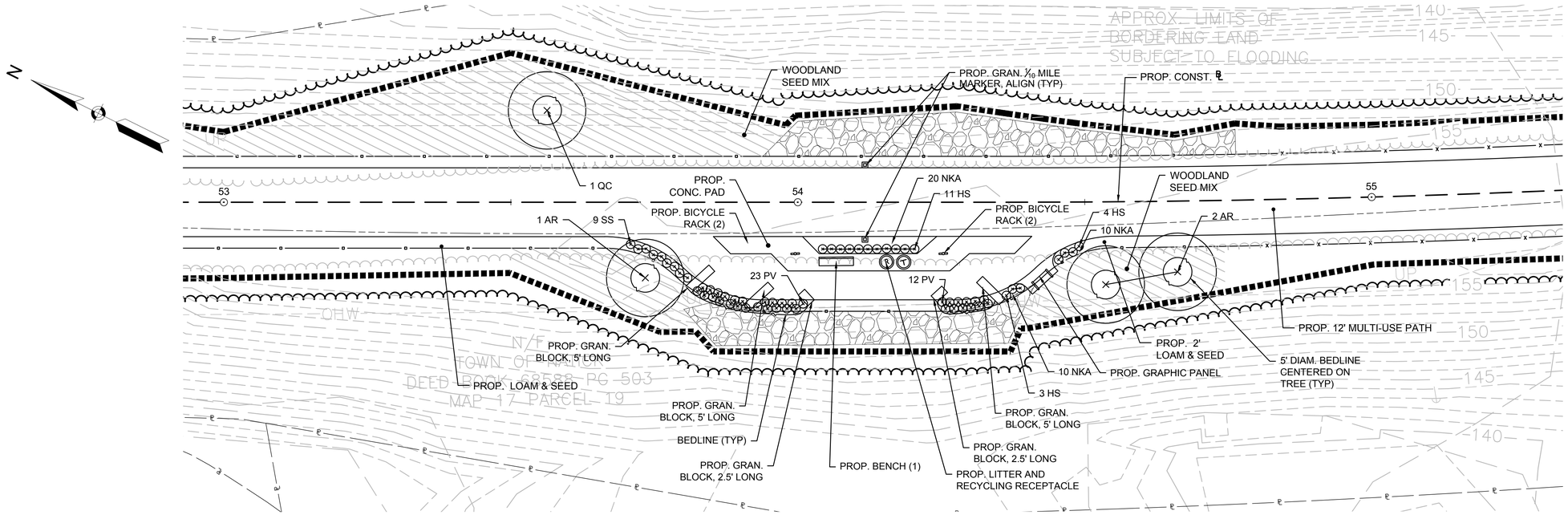

SCENIC OVERLOOK 2

SCALE: 1" = 10' -0"

0 10 25 50

SCALE: 1" = 10'

PLANT LIST - THIS SHEET					
SYM	QTY	BOTANICAL NAME	COMMON NAME	SIZE	REMARKS
TREES					
AR	6	Acer rubrum 'October Glory'	Red Maple	2"-2.5" Cal.	B&B
QC	1	Quercus palustris	Pin Oak	2"-2.5" Cal.	B&B
GRASSES, PERENNIALS AND BULBS					
HS	36	Hemerocallis 'Stella de Oro'	Stella de Oro Daylily	1 GAL.	Cont.
NKA	80	Narcissus 'King Alfred'	King Alfred Daffodil	DN1	3 Bulbs Per Plant Shown
PV	70	Panicum virgatum 'Cheyenne Sky'	Cheyenne Sky Switchgrass	2 Gal.	Cont.
SS	18	Schizachyrium scoparium	Little Bluestem	2 Gal.	Cont.

NOTE:
REFER TO SHEET 137 FOR TOTAL PLANT LIST.

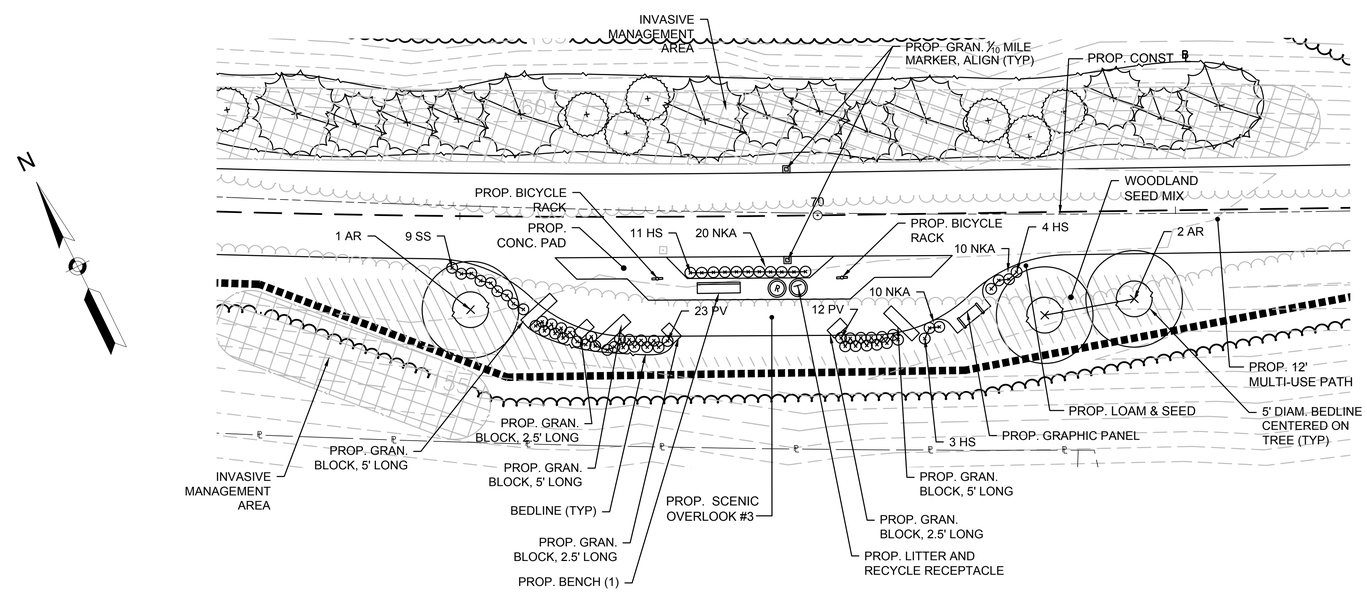

SCENIC OVERLOOK 3

SCALE: 1" = 10' -0"

0 10 25 50

SCALE: 1" = 10'

4576 LANDSCAPE PLANS.DWG Plotted on 20-Aug-2018 2:31 PM

NATICK/FRAMINGHAM
COCHITUATE RAIL TRAIL

STATE	FED. AID PROJ. NO.	SHEET NO.	TOTAL SHEETS
MA	STP(TE)/TAP/CMQ-003S(206)	143	253
PROJECT FILE NO.	607732		

LANDSCAPE DETAILS PLAN

4576 LANDSCAPE DTLS.DWG Plotted on 20-Aug-2018 2:31 PM

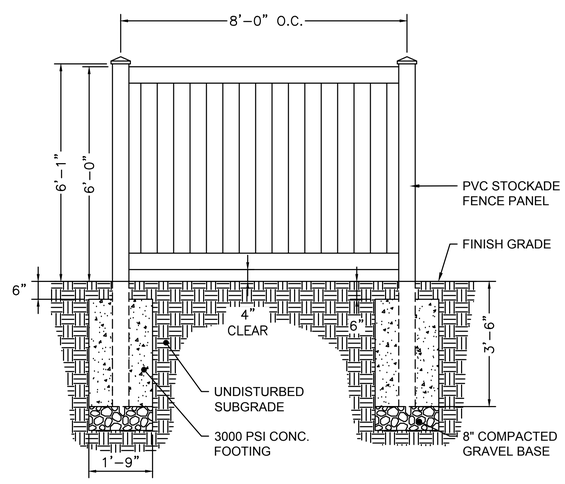

6' HIGH STOCKADE FENCE
SCALE: ½"=1'

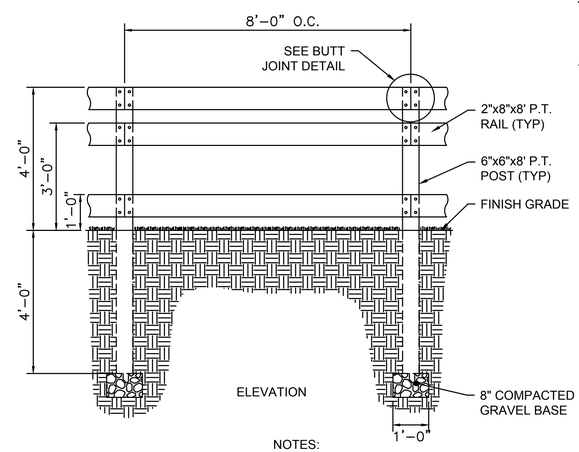

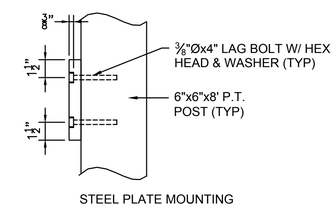

STEEL PLATE MOUNTING

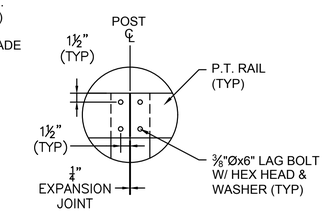

BUTT JOINT
N.T.S.

NOTES:
1. AFTER SETTING POSTS, TAMP BACKFILL FIRMLY IN PLACE.
2. DO NOT BACKFILL WITH CONCRETE.

3 RAIL FENCE
SCALE: ½"=1'

NATICK/FRAMINGHAM
COCHITUATE RAIL TRAIL

STATE	FED. AID PROJ. NO.	SHEET NO.	TOTAL SHEETS
MA	STP(TE)/TAP/CMQ-003S(206)	144	253
PROJECT FILE NO.	607732		

LANDSCAPE DETAILS PLAN

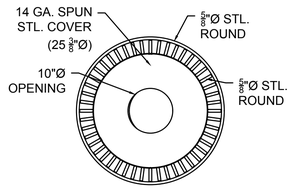

PLAN VIEW

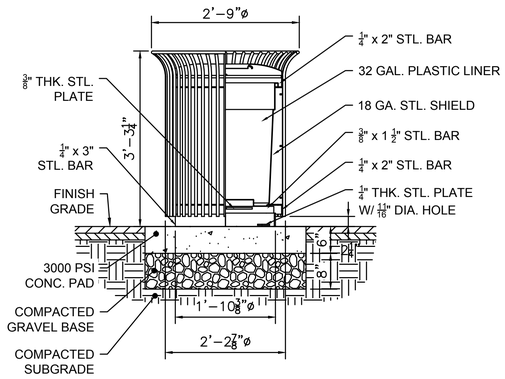

SECTION / ELEVATION

NOTES:.
1. SEE SPECIFICATIONS FOR MANUFACTURER, MODEL, & FINISH.
2. INSTALLATION TO BE COMPLETED IN ACCORDANCE WITH MANUFACTURER'S SPECIFICATIONS.

LITTER AND RECYCLE RECEPTACLE

SCALE: 3/4"=1'

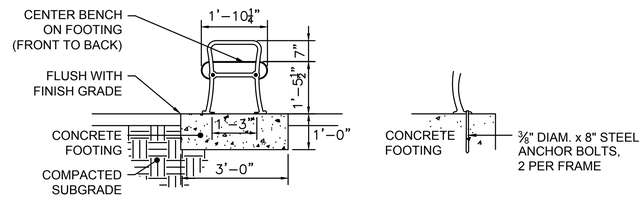

SIDE ELEVATION

MOUNTING DETAIL

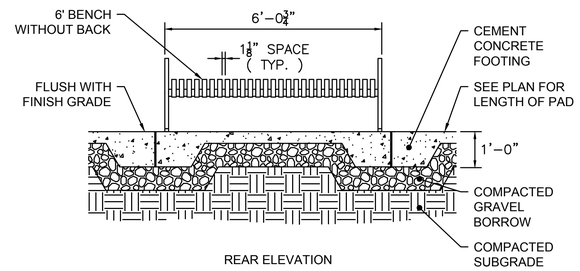

REAR ELEVATION

NOTES:
1. ALL STL. MEMBERS COATED W/ ZINC RICH EPOXY THEN POLYESTER POWDER COATED. SEE SPECIFICATIONS FOR COLOR.
2. 1/2"x3 3/4" PLTD. EXPANSION ANCHOR BOLTS PROVIDED BY MANUFACTURER.
3. SEE SPECIFICATIONS FOR MANUFACTURER, MODEL, & FINISH.
4. INSTALLATION TO BE COMPLETED IN ACCORDANCE WITH MANUFACTURER'S SPECIFICATIONS.

BENCH

SCALE: 1/2"=1'

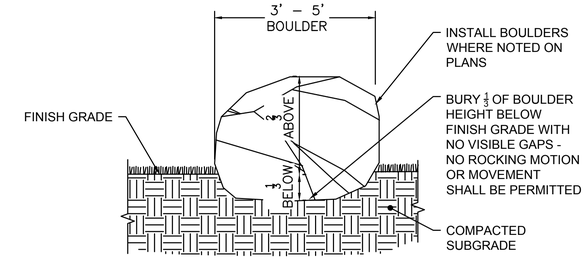

RELOCATED BOULDER

SCALE: 1/2"=1'

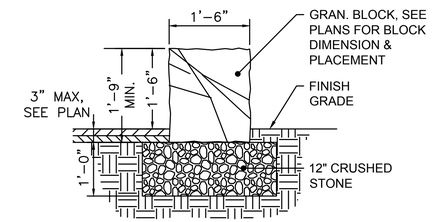

2.5' OR 5' GRANITE BLOCK

SCALE: 3/4"=1'

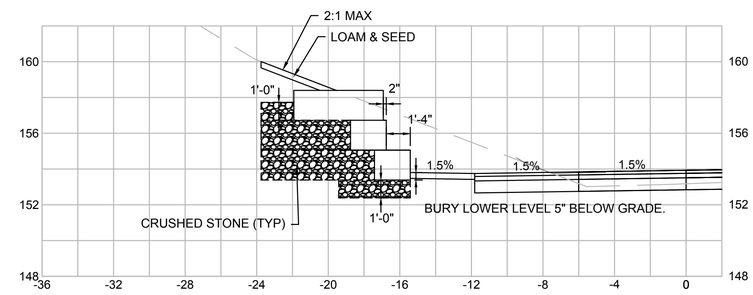

CROSS SECTION A-A (STA 29+25)

SCALE: 1/4"=1'

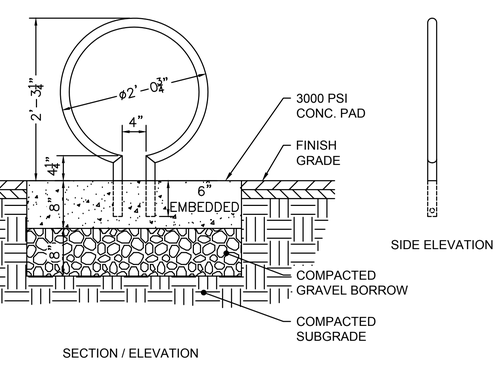

PLAN VIEW

SIDE ELEVATION

SECTION / ELEVATION

NOTE:
SEE SPECIFICATIONS FOR MANUFACTURER, MODEL AND FINISH.

BICYCLE RACK

SCALE: 1"=1'

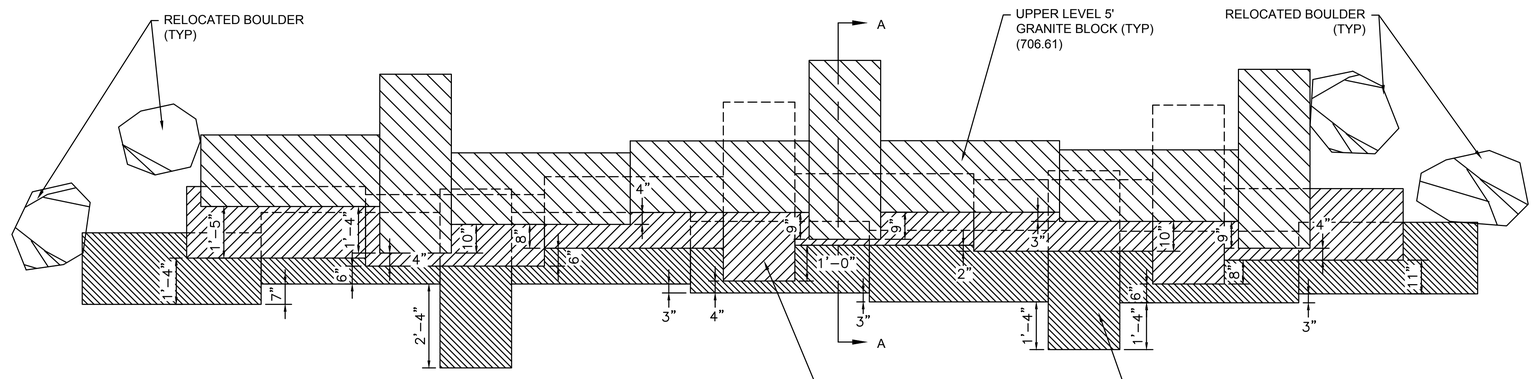

NOTE:
DIMENSIONS SHOWN ARE FOR DESIGN INTENT.
ACTUAL FIELD CONDITIONS MAY VARY.
CONTRACTOR TO PROVIDE SHOP DRAWINGS.

PLAN VIEW

GRANITE BLOCK WALL (STA 29+00 TO STA 29+46)

SCALE: 1/2"=1'

4576 LANDSCAPE DTLS.DWG Plotted on 20-Aug-2018 2:32 PM

NATICK/FRAMINGHAM
COCHITUATE RAIL TRAIL

STATE	FED. AID PROJ. NO.	SHEET NO.	TOTAL SHEETS
MA	STP(TE)TAP/CMQ-003S(206)	145	253
PROJECT FILE NO.	607732		

LANDSCAPE DETAILS PLAN

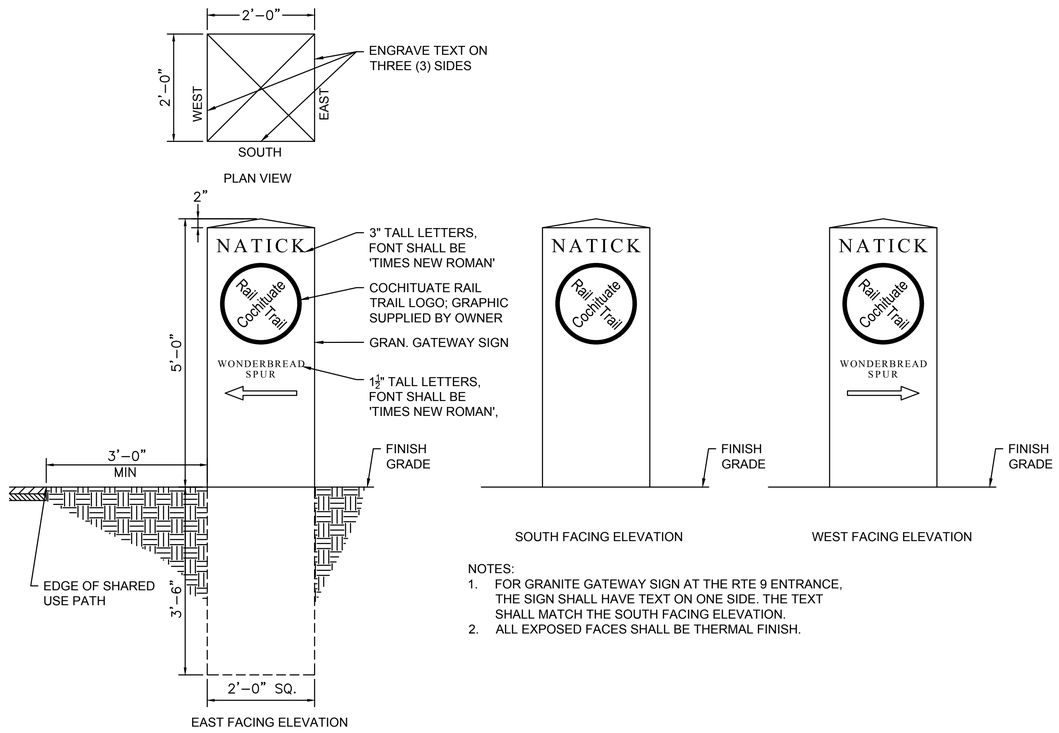

NOTES:
1. FOR GRANITE GATEWAY SIGN AT THE RTE 9 ENTRANCE, THE SIGN SHALL HAVE TEXT ON ONE SIDE. THE TEXT SHALL MATCH THE SOUTH FACING ELEVATION.
2. ALL EXPOSED FACES SHALL BE THERMAL FINISH.

GRANITE GATEWAY SIGN
SCALE: ¾"=1'

GRANITE MARKER SCHEDULE - CRT MAIN BASELINE				
NO.	MARKER LOCATION	DISTANCE	QTY	TYPE
1	STA. 17+15.71	2.3	2	1/10
2	STA. 22+43.71	2.2	2	1/10
3	STA. 27+71.71	2.1	2	1/10
4	STA. 32+99.71	2.0	2	1MILE
5	STA. 38+27.71	1.9	2	1/10
6	STA. 43+55.71	1.8	2	1/10
7	STA. 48+83.71	1.7	2	1/10
8	STA. 54+11.71	1.6	2	1/10
9	STA. 59+39.72	1.5	2	1/10
10	STA. 65+73.06	1.4	2	1/10
11	STA. 69+95.71	1.3	2	1/10
12	STA. 75+23.71	1.2	2	1/10
13	STA. 80+51.71	1.1	2	1/10
14	STA. 85+79.71	1.0	2	1 MILE
15	STA. 91+07.71	0.9	2	1/10
16	STA. 96+35.71	0.8	2	1/10
17	STA. 101+63.71	0.7	2	1/10
18	STA. 107+17.52	0.6	2	1/10
19	STA. 112+45.11	0.5	2	1/10
20	STA. 117+47.71	0.4	2	1/10
21	STA. 122+75.71	0.3	2	1/10
22	STA. 128+03.71	0.2	2	1/10
23	STA. 133+63.66 (NIC)	0.1	2	1/10

GRANITE MARKER SCHEDULE - SPEEN STREET SPUR BASELINE				
NO.	MARKER LOCATION	DISTANCE	QTY	TYPE
1	STA. 14+88.67	0.1	2	1/10
2	STA. 20+16.67	0.2	2	1/10
3	STA. 25+44.67	0.3	2	1/10

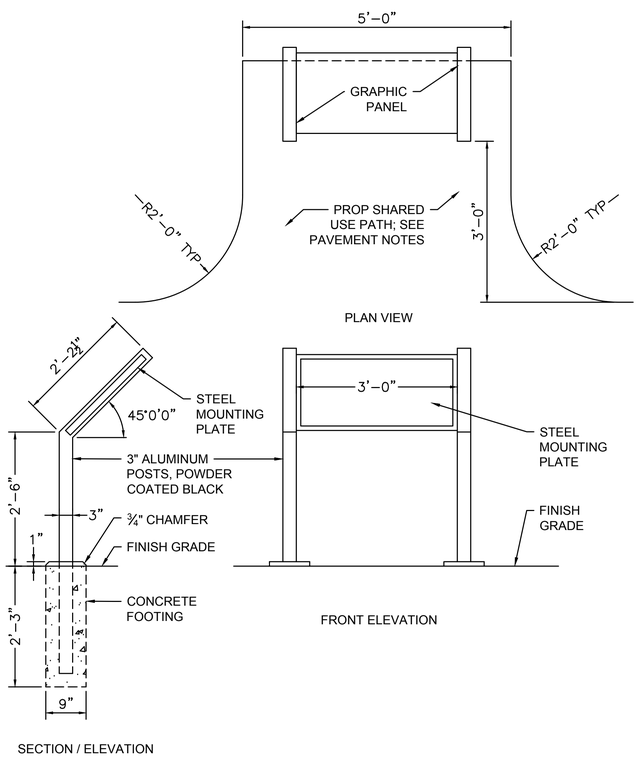

GRAPHIC PANEL
SCALE: ¾"=1'

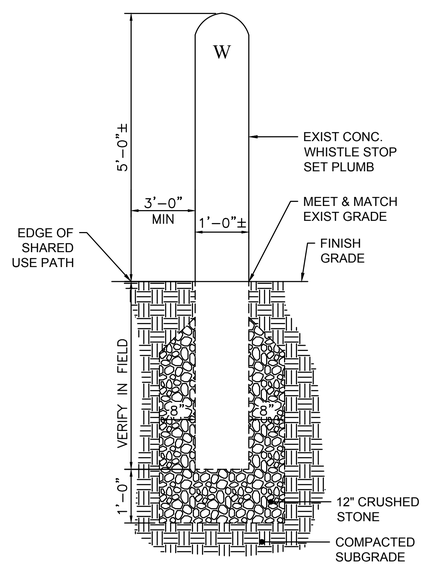

RELOCATED WHISTLE STOP
SCALE: ¾"=1'

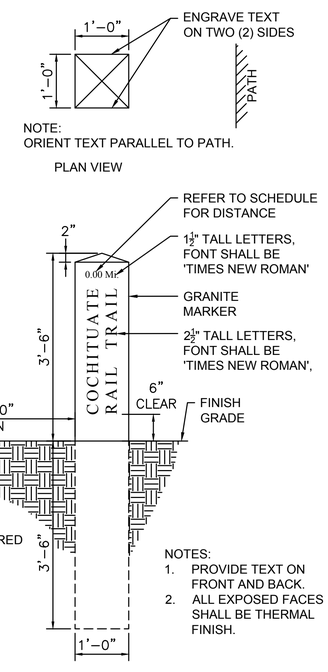

GRANITE MILE MARKER
SCALE: ¾"=1'

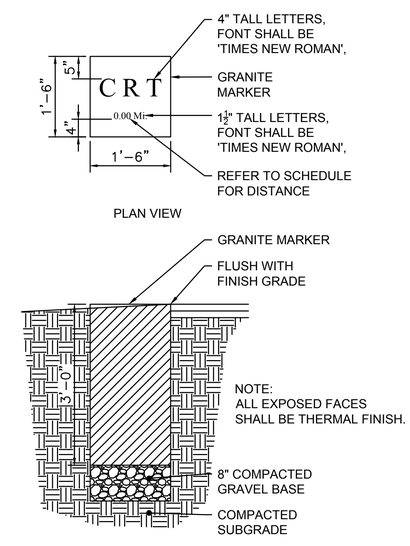

GRANITE 1/10 MILE MARKER
SCALE: ¾"=1'

4576 LANDSCAPE DTLS.DWG Plotted on 20-Aug-2018 2:32 PM

NATICK/FRAMINGHAM
COCHITUATE RAIL TRAIL

STATE	FED. AID PROJ. NO.	SHEET NO.	TOTAL SHEETS
MA	STP(TE)/TAP/CMQ-003S(206)	146	253
PROJECT FILE NO.	607732		

LANDSCAPE DETAILS PLAN

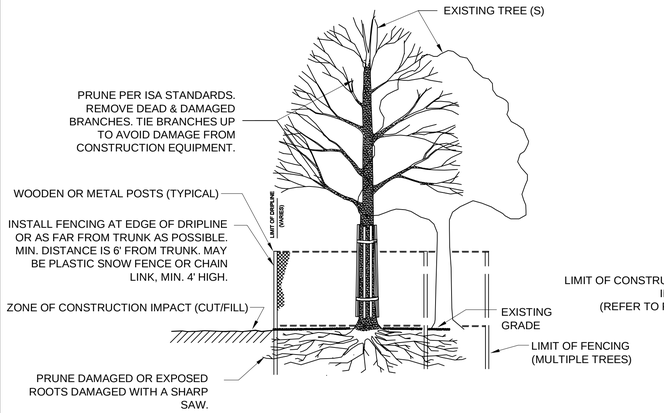

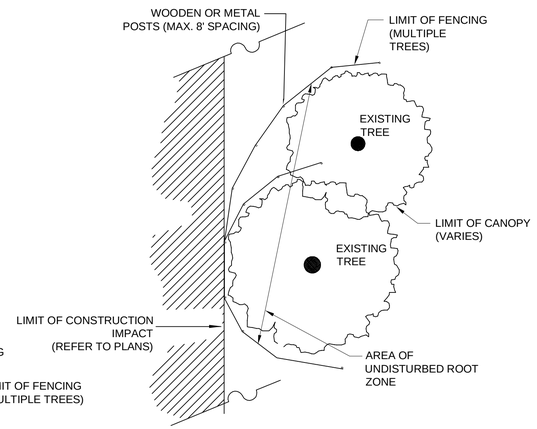

PLAN VIEW

TEMPORARY TREE PROTECTION FENCE
NOT TO SCALE

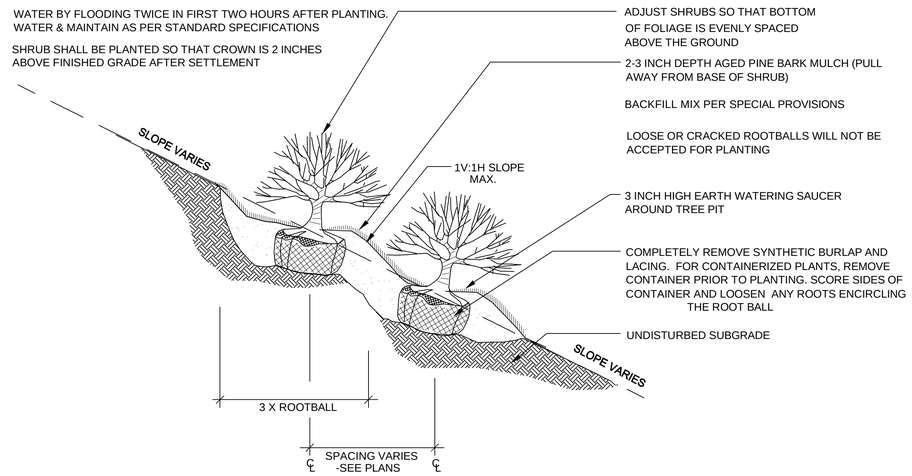

CONTAINERIZED SHRUB PLANTING (SLOPE) DETAIL
NOT TO SCALE

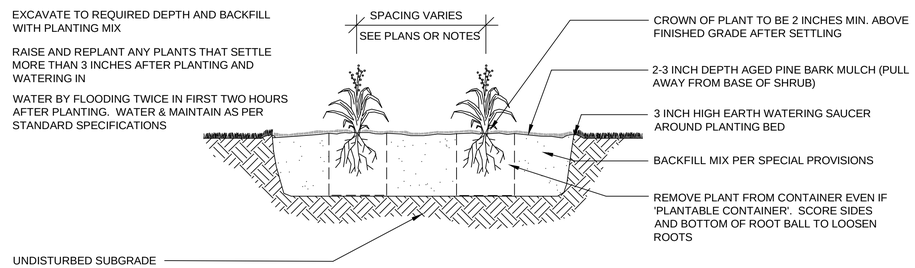

PERENNIAL PLANTING
NOT TO SCALE

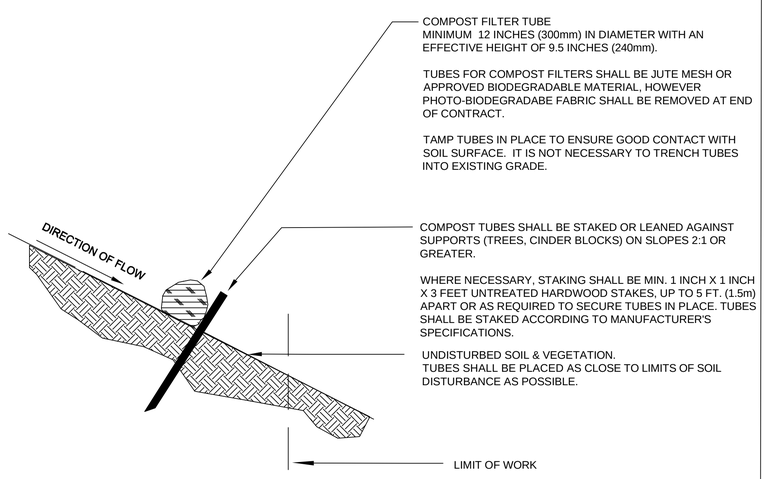

COMPOST FILTER TUBE DETAIL
NOT TO SCALE

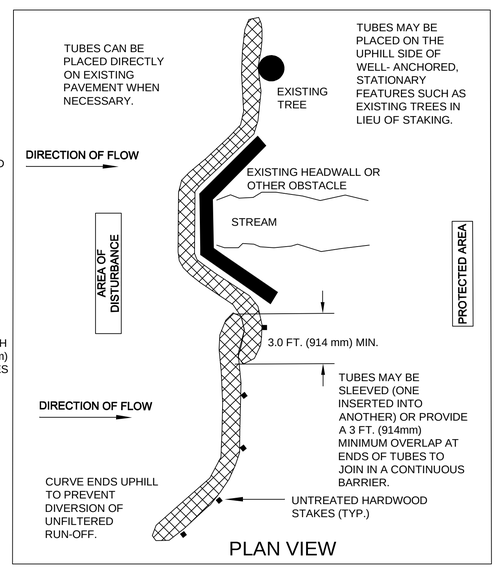

PLAN VIEW

GENERAL NOTES:
1. PROVIDE A MINIMUM TUBE DIAMETER OF 12 INCHES (300mm) FOR SLOPES UP TO 50 FEET (15.24m) IN LENGTH WITH A SLOPE RATIO OF 3H:1V OR STEEPER. LONGER SLOPES OF 3H:1V MAY REQUIRE LARGER TUBE DIAMETER OR ADDITIONAL COURSING OF FILTER TUBES TO CREATE A FILTER BERM. REFER TO MANUFACTURER'S RECOMMENDATIONS FOR SITUATIONS WITH LONGER OR STEEPER SLOPES.
2. INSTALL TUBES ALONG CONTOURS AND PERPENDICULAR TO SHEET OR CONCENTRATED FLOW.
3. TUBE LOCATION MAY BE SHIFTED TO ADJUST TO LANDSCAPE FEATURES, BUT SHALL PROTECT UNDISTURBED AREA AND VEGETATION TO MAXIMUM EXTENT POSSIBLE.
4. DO NOT INSTALL IN PERENNIAL, EPHEMERAL OR INTERMITTENT STREAMS.
5. ADDITIONAL TUBES SHALL BE USED AT THE DIRECTION OF THE ENGINEER.
6. ADDITIONAL STAKING SHALL BE USED AT THE DIRECTION OF THE ENGINEER.

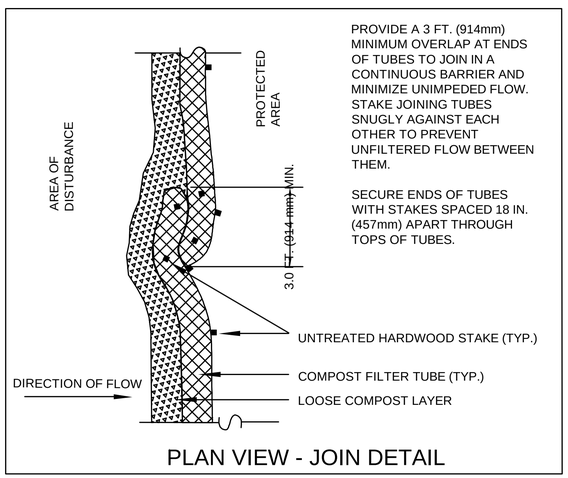

PLAN VIEW - JOIN DETAIL

20150226_MassDOT_rev7

4576 LANDSCAPE DTLS.DWG Plotted on 20-Aug-2018 2:32 PM

NATICK/FRAMINGHAM
COCHITUATE RAIL TRAIL

STATE	FED. AID PROJ. NO.	SHEET NO.	TOTAL SHEETS
MA	STP(TE)/TAP/CMQ-003S(206)	147	253
PROJECT FILE NO.	607732		

LANDSCAPE DETAILS PLAN

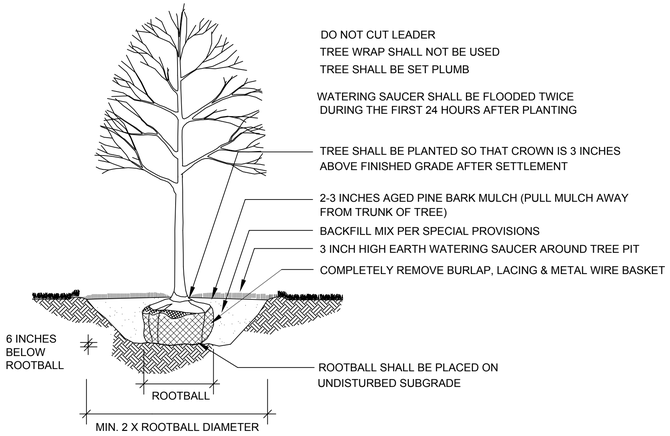

DECIDUOUS TREE PLANTING
NOT TO SCALE

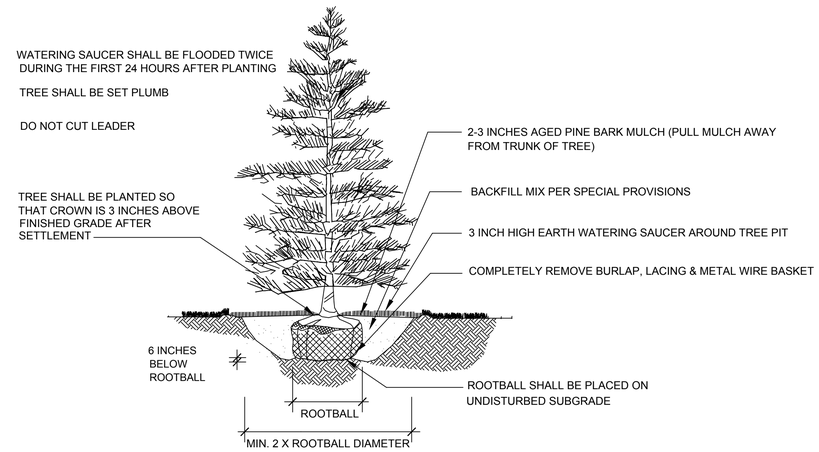

EVERGREEN TREE PLANTING
NOT TO SCALE

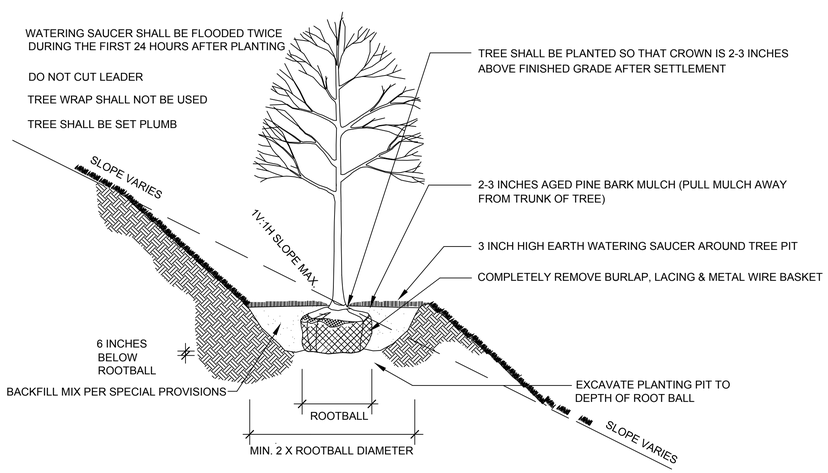

DECIDUOUS TREE PLANTING (SLOPE)
NOT TO SCALE

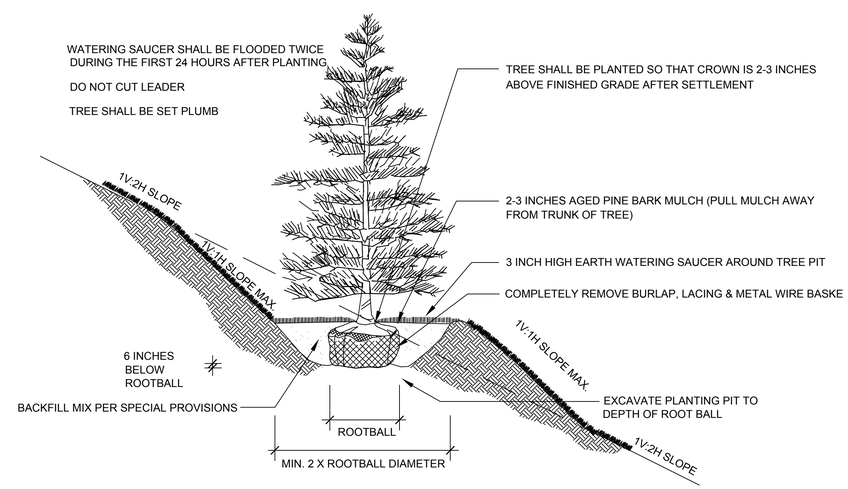

EVERGREEN TREE PLANTING (SLOPE)
NOT TO SCALE

4576 LANDSCAPE DTLS.DWG Plotted on 20-Aug-2018 2:33 PM

4576 CONST DTLS.DWG Plotted on 20-Aug-2018 2:33 PM

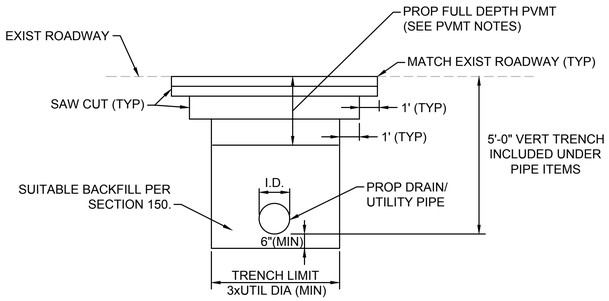

TYPICAL UTILITY TRENCH PERMANENT PAVEMENT REPAIR

NOT TO SCALE

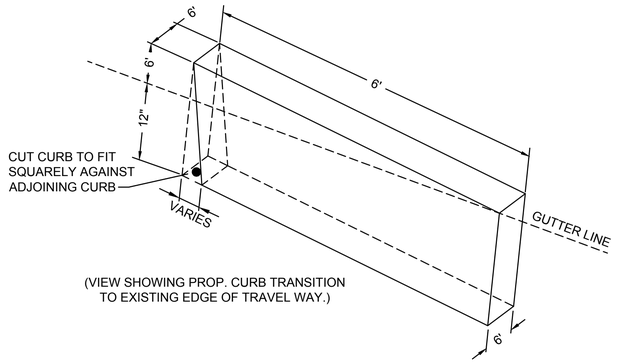

(VIEW SHOWING PROP. CURB TRANSITION TO EXISTING EDGE OF TRAVEL WAY.)

DETAIL FOR GRANITE TRANSITION CURB

NOT TO SCALE

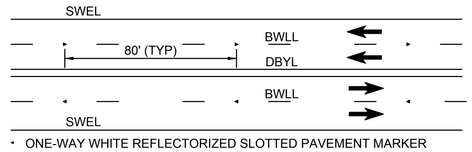

REFLECTORIZED SLOTTED PAVEMENT MARKER DETAIL

NOT TO SCALE

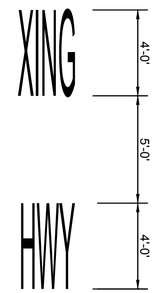

HIGHWAY CROSSING SYMBOL SPACING

NOT TO SCALE

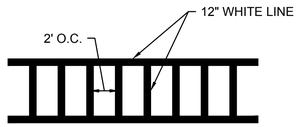

TYPICAL CROSSWALK MARKING DETAIL

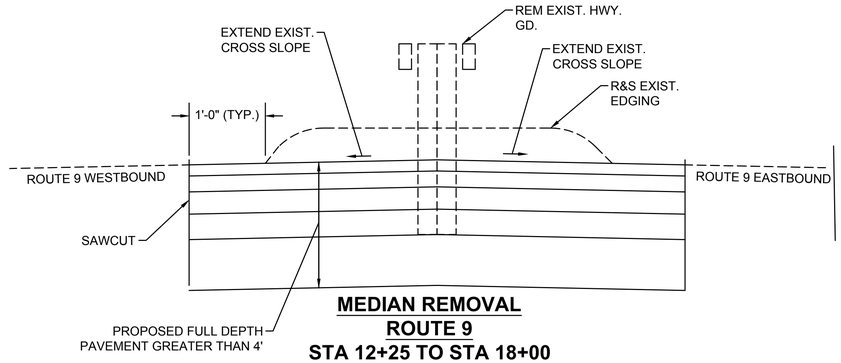

MEDIAN REMOVAL ROUTE 9 STA 12+25 TO STA 18+00

NOT TO SCALE

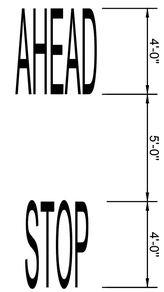

STOP AHEAD SYMBOL SPACING

NOT TO SCALE

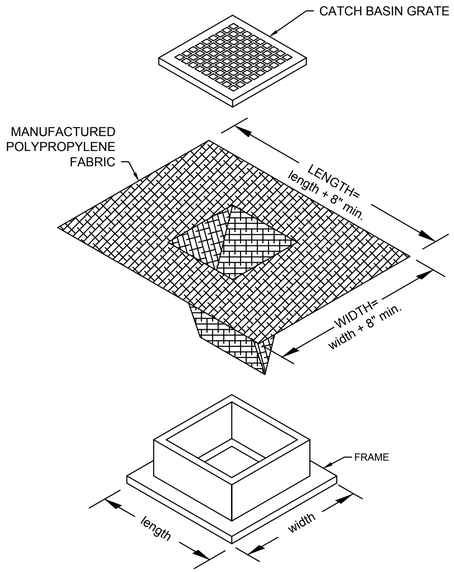

NOTES

1. LENGTH AND WIDTH OF POLYPROPYLENE FABRIC MUST EXCEED EXISTING CATCH BASIN FRAME DIMENSIONS BY A MINIMUM OF 8".
2. REMOVE CATCH BASIN GRATE AND INSTALL POLYPROPYLENE FABRIC OVER CATCH BASIN FRAME. REPLACE CATCH BASIN GRATE TO SECURE POLYPROPYLENE FABRIC IN PLACE.

SILT SACK

NOT TO SCALE

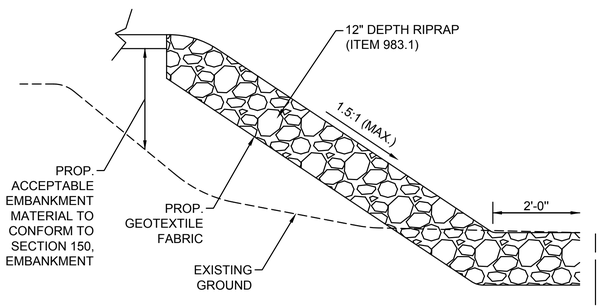

RIPRAP FILL DETAIL

NOT TO SCALE

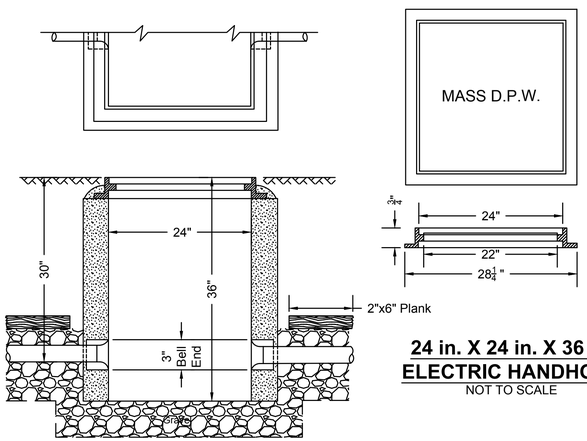

24 in. X 24 in. X 36 in. ELECTRIC HANDHOLE

NOT TO SCALE

4576 CONST DTLS.DWG Plotted on 20-Aug-2018 2:33 PM

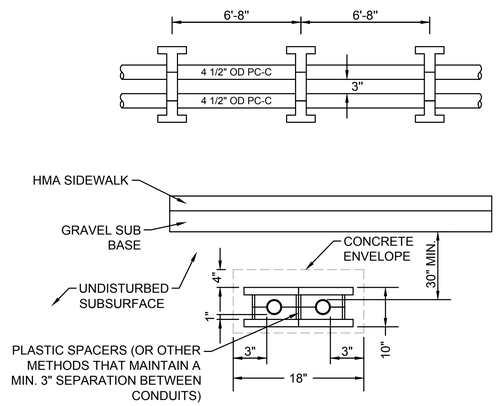

2x1 UTILITY DUCTBANK DETAIL
NOT TO SCALE

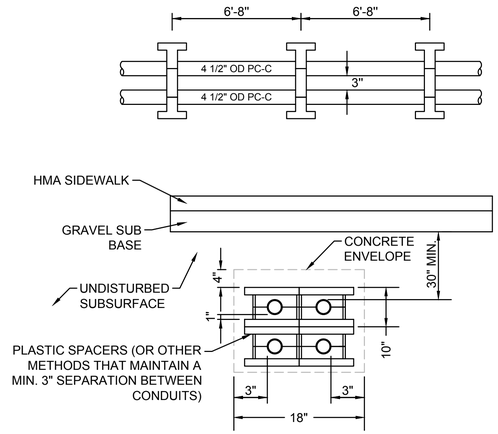

2x2 UTILITY DUCTBANK DETAIL
NOT TO SCALE

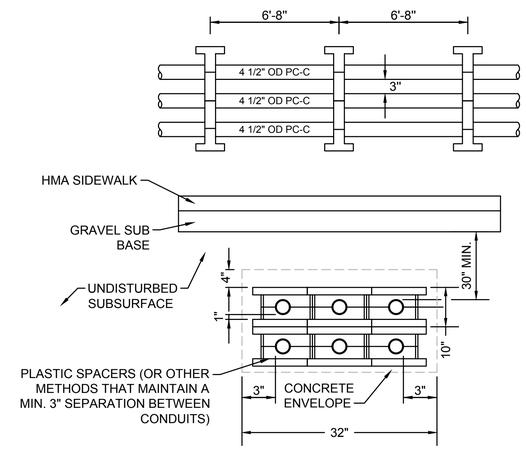

3x2 UTILITY DUCTBANK DETAIL
NOT TO SCALE

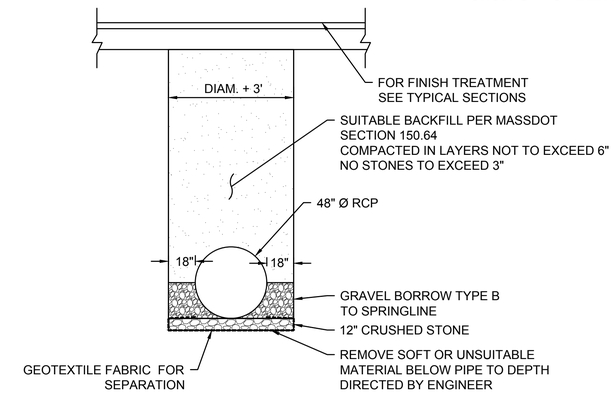

CULVERT TYPICAL SECTION
STA 102+82
NOT TO SCALE

NOTES:
1. CONSTRUCTION JOINTS REQUIRED AT 40' INTERVALS ($\frac{3}{4}$" PREMOULDED JOINT FILLER REQUIRED FOR PRECAST BARRIERS).
2. USE MINIMAL COVER OF 1 $\frac{1}{2}$", UNLESS OTHERWISE INDICATED.
3. MATERIAL IS 4000 PSI CEMENT CONCRETE. (SEE MASSDOT SPECIFICATIONS FOR DESIGN REQUIREMENTS)
4. ALL STEEL REINFORCING TO BE GALVANIZED OR EPOXY COATED, AASHTO-M31, GRADE 60.
5. ALL LONGITUDINAL BARS ARE TO BE CONTINUOUS.
6. FOR DIMENSIONS SEE E402.10.0

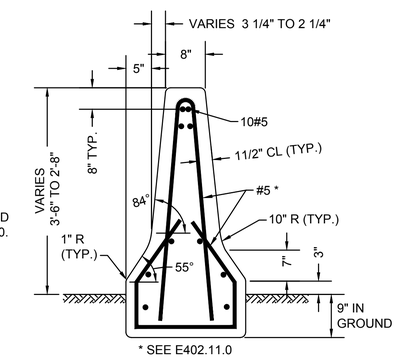

* SEE E402.11.0

PRE-CAST MEDIAN BARRIER TRANSITION
NOT TO SCALE

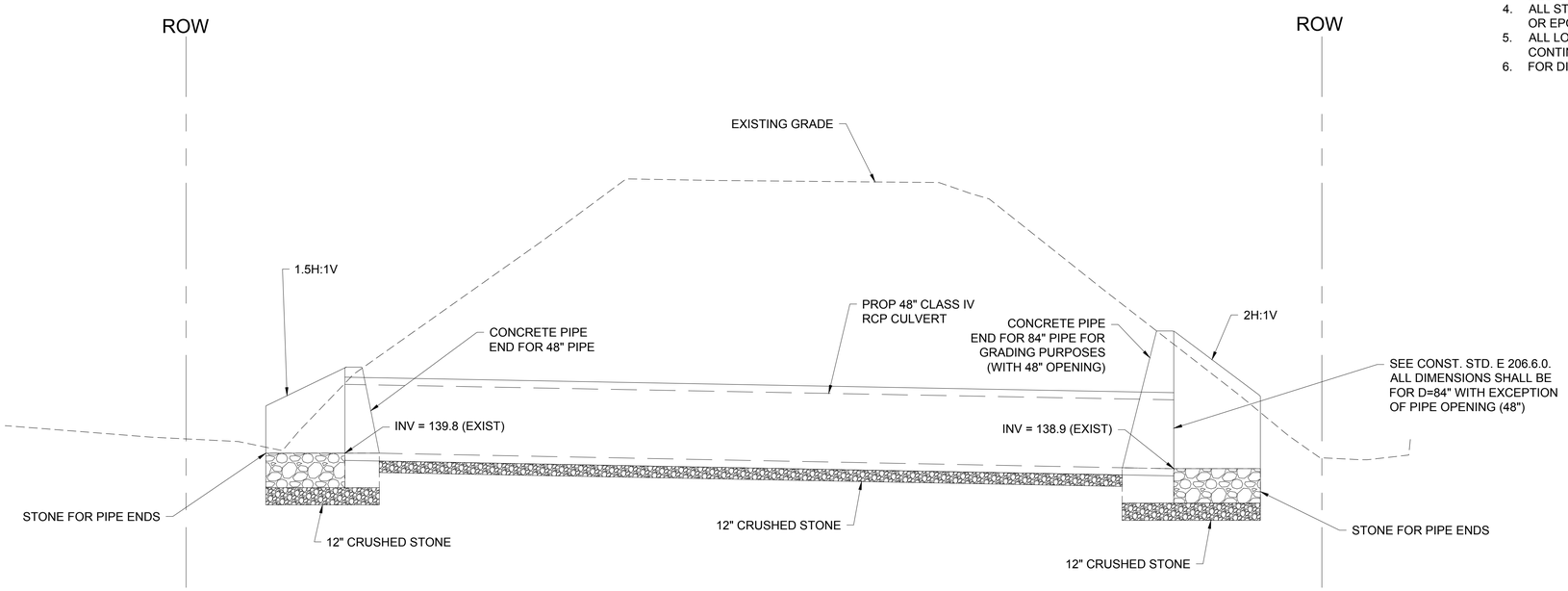

CULVERT PROFILE SECTION
STA 102+82
SCALE: 1"=4'

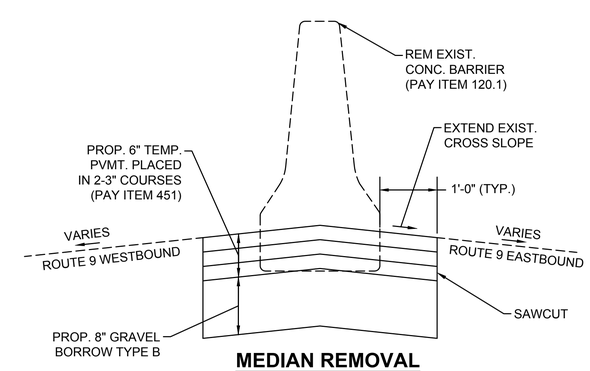

MEDIAN REMOVAL
ROUTE 9
STA 6+00 TO STA 12+00
NOT TO SCALE

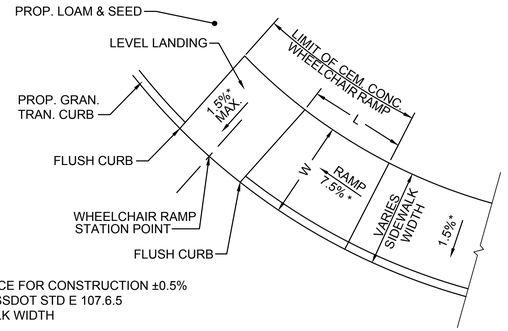

LEGEND
* = TOLERANCE FOR CONSTRUCTION ±0.5%
** = SEE MASSDOT STD E 107.6.5
W = SIDEWALK WIDTH

WHEELCHAIR RAMP DETAIL AT SIDEWALK TERMINUS

NOT TO SCALE

WHEELCHAIR RAMP DETAIL AT SIDEWALK TERMINUS

WCR #	BASELINE	RAMP REFERENCE POINT		W WIDTH OF SIDEWALK (FT)	WIDTH OF RAMP ENTRANCE (FT)	DEPTH OF LEVEL LANDING (FT)	ROADWAY GUTTER SLOPE (%)	TRANSITION LENGTH
		STATION	OFFSET					
11	SPEEN ST SPUR	701+38.42	51.56 L	5.5	5.0	6.0	+4.03	6.5
17	RAIL TRAIL	106+96.42	0.47 L	5.0	12.0	5.5	-3.66	11.0
18	RAIL TRAIL	111+83.70	0.12 L	6.0	10.0	6.5	-0.76	6.5
19	RAIL TRAIL	112+27.72	0.11 L	8.0	9.5	8.5	-0.27	9.0

NATICK/FRAMINGHAM COCHITUATE RAIL TRAIL

STATE	FED. AID PROJ. NO.	SHEET NO.	TOTAL SHEETS
MA	STP(TE)/TAP/CMQ-003S(206)	150	253
PROJECT FILE NO.	607732		

CONSTRUCTION DETAILS

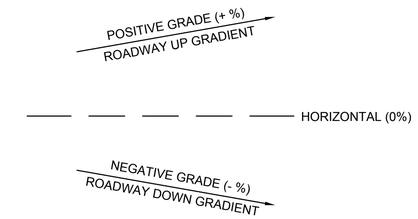

NOTE: ALL GRADE VALUES HAVE BEEN CALCULATED AS VIEWED FROM THE CENTERLINE

GUTTER SLOPE NOTATION DIAGRAM

NOT TO SCALE

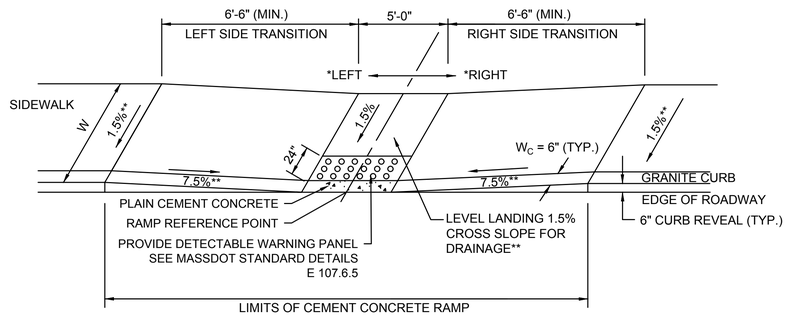

LEGEND
W = SIDEWALK WIDTH

NOTES:
* LEFT AND RIGHT ARE DETERMINED BY VIEWING THE RAMP FROM THE STREET
** CONSTRUCTION TOLERANCE = +/- 0.5%

WHEELCHAIR RAMP DETAIL FOR NARROW SIDEWALK

NOT TO SCALE

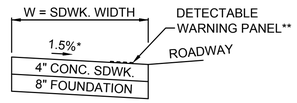

SECTION "A-A"
NOT TO SCALE

LEGEND
* = TOLERANCE FOR CONSTRUCTION ±0.5%
** = SEE MASSDOT STD E 107.6.5
W = SIDEWALK WIDTH

WHEELCHAIR RAMP DETAIL FOR NARROW SIDEWALK

WCR #	BASELINE	RAMP REFERENCE POINT		W WIDTH OF SIDEWALK (FT)	WIDTH OF RAMP (FT)	ROADWAY GUTTER SLOPE (%)	TRANSITION LENGTH	
		STATION	OFFSET				*LEFT SIDE	*RIGHT SIDE
1	ROUTE 30	11+03.16	33.74 R	5.0	5.5	-1.25	9.0	6.5
15	RAIL TRAIL	95+18.52	00.00 R	5.0	16.0	+3.24	6.5	5.9 (3" REVEAL)
16	RAIL TRAIL	106+23.44	0.37 L	5.0	9.0	+2.15	6.5	4.7 (3" REVEAL)
21	RAIL TRAIL	106+17.83	20.12 L	5.0 (EXIST.)	5.0 (EXIST.)	-1.10	6.5 (3" REVEAL)	EXIST.

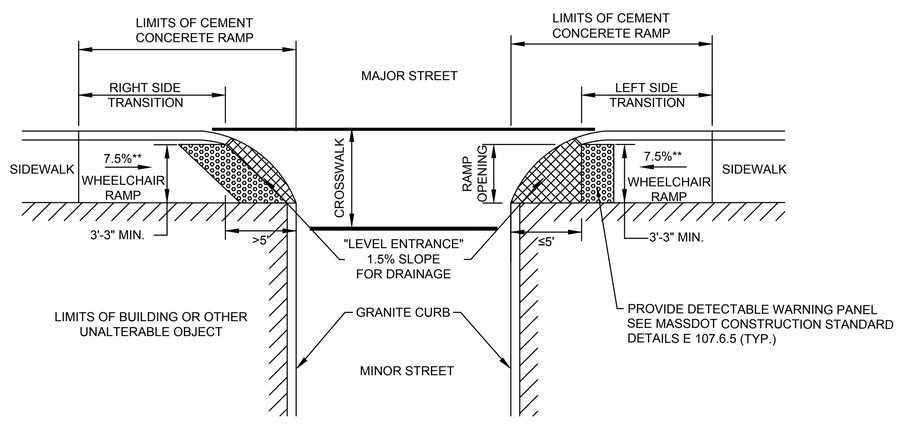

NOTES:
* LEFT AND RIGHT ARE DETERMINED BY VIEWING THE RAMP FROM THE STREET
** CONSTRUCTION TOLERANCE = +/- 0.5%

WHEELCHAIR RAMP DETAIL FOR ONE CONTINUOUS DIRECTION OF TRAVEL

NOT TO SCALE

WHEELCHAIR RAMP DETAIL FOR ONE CONTINUOUS DIRECTION OF TRAVEL

WCR #	BASELINE	RAMP REFERENCE POINT		LENGTH OF PRIMARY RAMP (FT)	W WIDTH OF SIDEWALK (FT)	WIDTH OF OPENING MIN 3'-3"	ROADWAY GUTTER SLOPE (%)
		STATION	OFFSET				
2	ROUTE 30	12+41.23	28.48 R	6.5	5.0	4.50	-3.51
3	ROUTE 30	12+68.85	27.72 R	15.0	5.0	4.50	-4.00
4	ROUTE 30	13+28.95	27.69 R	6.5	5.0	3.50	-3.02
5	ROUTE 30	13+75.21	26.19 R	9.0	5.0	4.50	-1.10
6	ROUTE 30	15+44.55	25.14 R	14.0	5.0	4.00	+1.58
7	ROUTE 30	16+02.98	25.82 R	6.5	5.0	4.00	-0.56

4576 CONST DTLS.DWG Plotted on 20-Aug-2018 2:33 PM

4576 CONST DTLS.DWG Plotted on 20-Aug-2018 2:33 PM

SIDEWALK THROUGH DRIVEWAY DETAIL

DWY #	BASELINE	RAMP REFERENCE POINT		WIDTH OF SIDEWALK (FT)	WIDTH OF OPENING (FT)	ROADWAY GUTTER SLOPE (%)	PATH OF TRAVEL (3'-0" MIN.) (FT)	TRANSITION LENGTH		DRIVEWAY TYPE
		STATION	OFFSET					*LEFT SIDE	*RIGHT SIDE	
1	ROUTE 9	13+28.21	34.18 L	6.0	42.61	2.01	3.25	8.0	14.0	A
2	CRT	95+18.90	28.95 R	5.0 (EXIST.)	17.90	+3.24	3.25	3.0 (3" REVEAL)	EXIST.	A

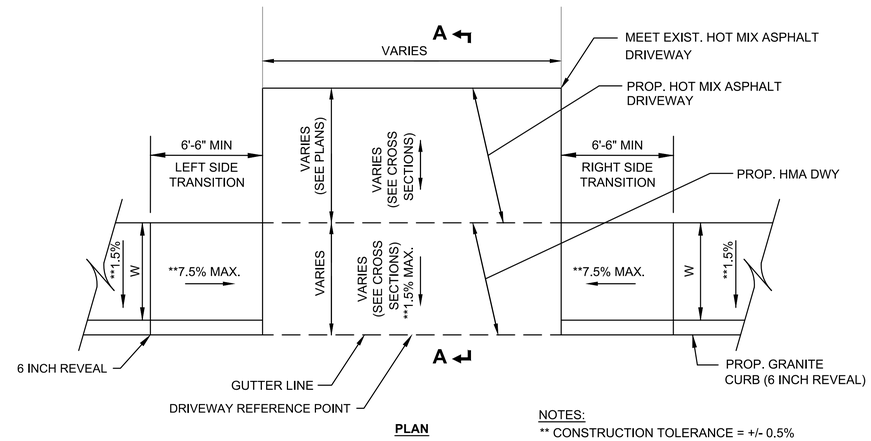

PLAN

NOTES:
** CONSTRUCTION TOLERANCE = +/- 0.5%

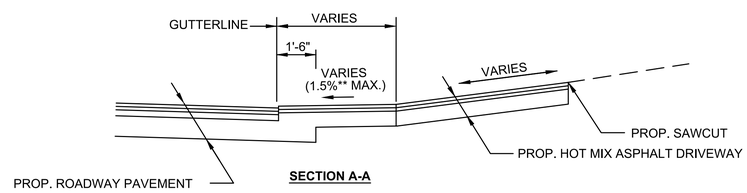

SECTION A-A

HMA SIDEWALK THROUGH DRIVEWAY DETAIL

NOT TO SCALE

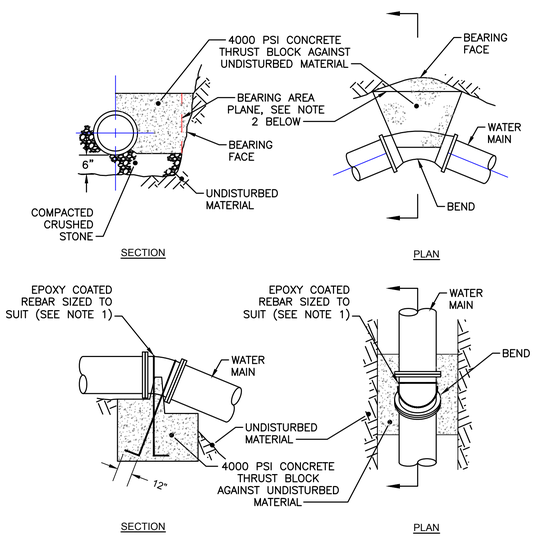

NOTES
1. ALL WATER MAIN BENDS SHALL BE BACKED UP WITH A CONCRETE THRUST BLOCK BETWEEN THE PIPE AND UNDISTURBED MATERIAL IN ACCORDANCE WITH DUCTILE IRON PIPE RESEARCH ASSOCIATION THRUST RESTRAINT DESIGN (DIPRA) FOR DUCTILE IRON PIPE.
2. BEARING AREA REQUIRED ON VERTICAL PLANE 90 DEGREES TO RADIUS PLANE PASSING THROUGH MIDPOINT OF BEND
3. POLYPROPYLENE SHEETING SHALL BE PLACED AROUND FITTINGS PRIOR TO POURING CONCRETE IN ACCORDANCE WITH AWWA C105.
4. CONCRETE SHALL BE PLACED SO AS TO NOT INTERFERE WITH THE JOINTS OF THE FITTING

VERTICAL & HORIZONTAL BEND THRUST BLOCK

NOT TO SCALE

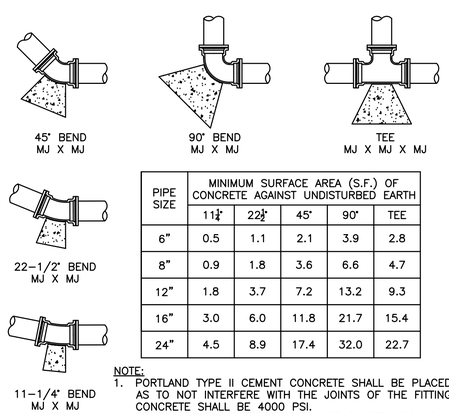

PIPE SIZE	MINIMUM SURFACE AREA (S.F.) OF CONCRETE AGAINST UNDISTURBED EARTH				
	11¼°	22½°	45°	90°	TEE
6"	0.5	1.1	2.1	3.9	2.8
8"	0.9	1.8	3.6	6.6	4.7
12"	1.8	3.7	7.2	13.2	9.3
16"	3.0	6.0	11.8	21.7	15.4
24"	4.5	8.9	17.4	32.0	22.7

NOTE:
1. PORTLAND TYPE II CEMENT CONCRETE SHALL BE PLACED SO AS TO NOT INTERFERE WITH THE JOINTS OF THE FITTING. CONCRETE SHALL BE 4000 PSI.
2. POLYPROPYLENE SHEETING SHALL BE PLACED AROUND FITTINGS PRIOR TO POURING CONCRETE IN ACCORDANCE WITH AWWA C105.

THRUST BLOCK BEARING AREAS

NOT TO SCALE

NATICK/FRAMINGHAM
COCHITUATE RAIL TRAIL

STATE	FED. AID PROJ. NO.	SHEET NO.	TOTAL SHEETS
MA	STP(TE)/TAP/CMQ-003S(206)	152	253
PROJECT FILE NO.	607732		

CONSTRUCTION DETAILS

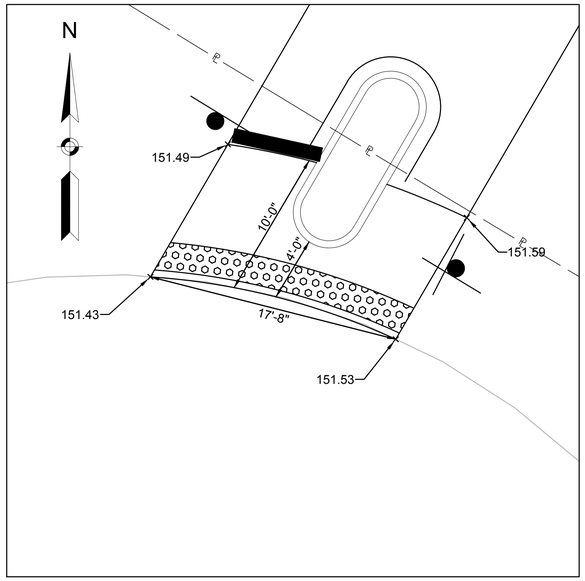

WCR-8
RAIL TRAIL STA. 23+42.8 RIGHT

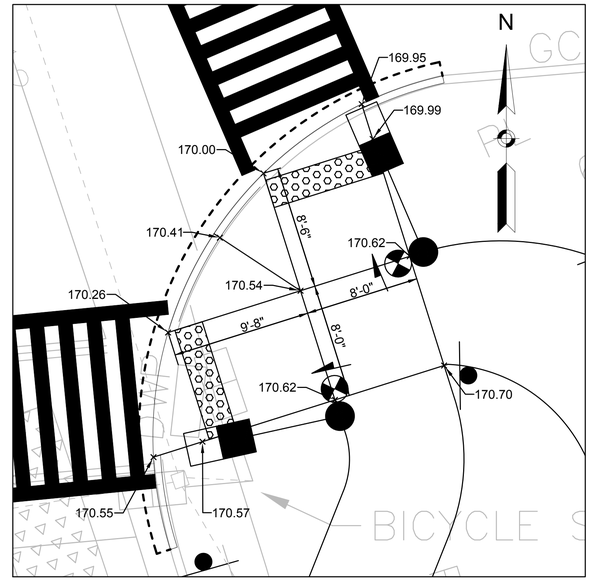

WCR-9A
SPEEN STREET SPUR STA: 701+28.5 LEFT
WCR-9B
SPEEN STREET SPUR STA: 701+41.7 LEFT

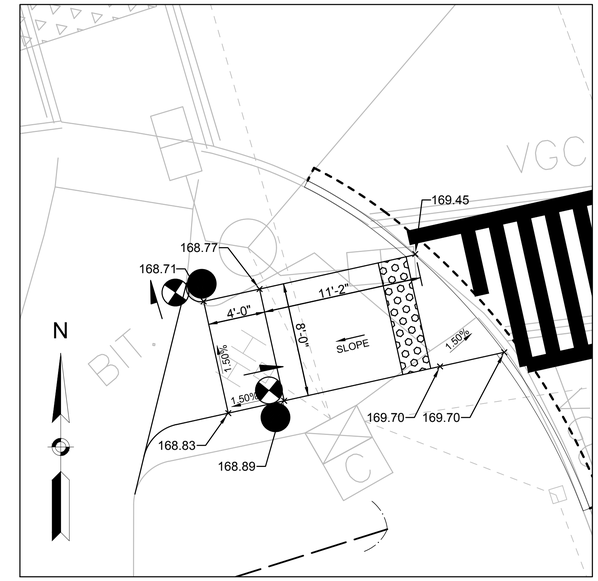

WCR-10
SPEEN STREET SPUR STA: 700+51.8 LEFT

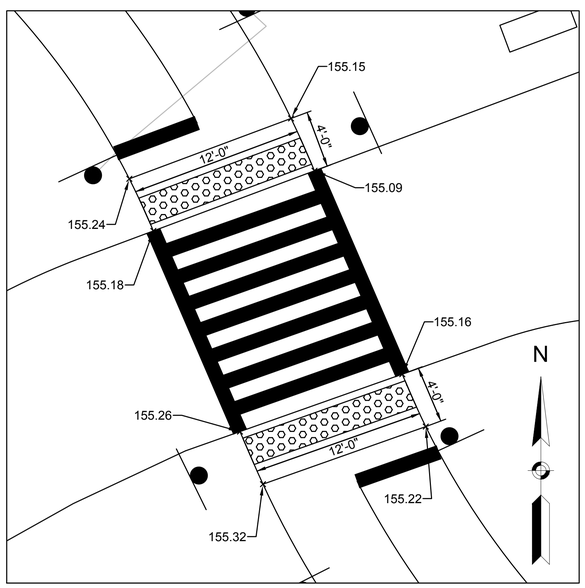

WCR-12
RAIL TRAIL STA: 42+17.5 RIGHT
WCR-13
RAIL TRAIL STA: 42+32.9 RIGHT

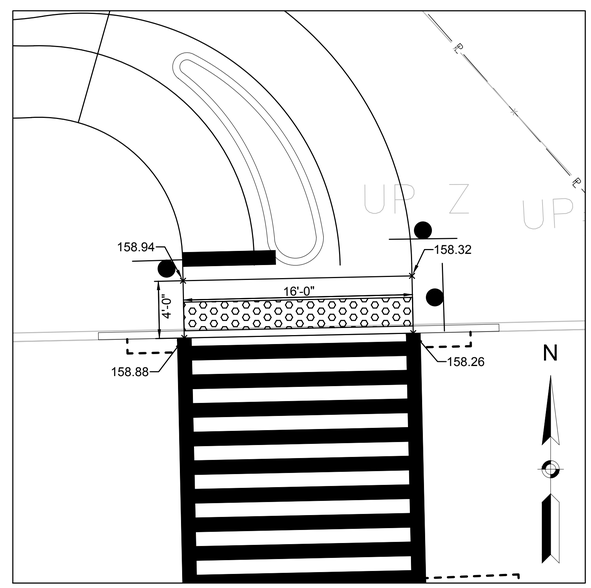

WCR-14
RAIL TRAIL STA: 95+00.2 RIGHT

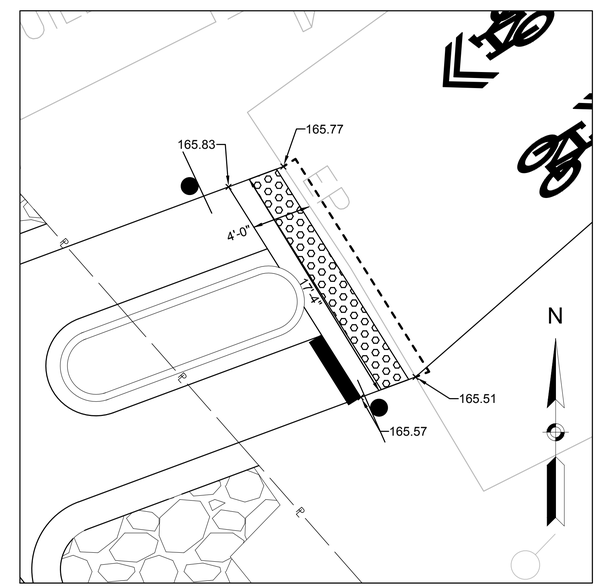

WCR-20
RAIL TRAIL STA: 128+81.1 LEFT

4576 CONST DTLS.DWG Plotted on 20-Aug-2018 2:34 PM

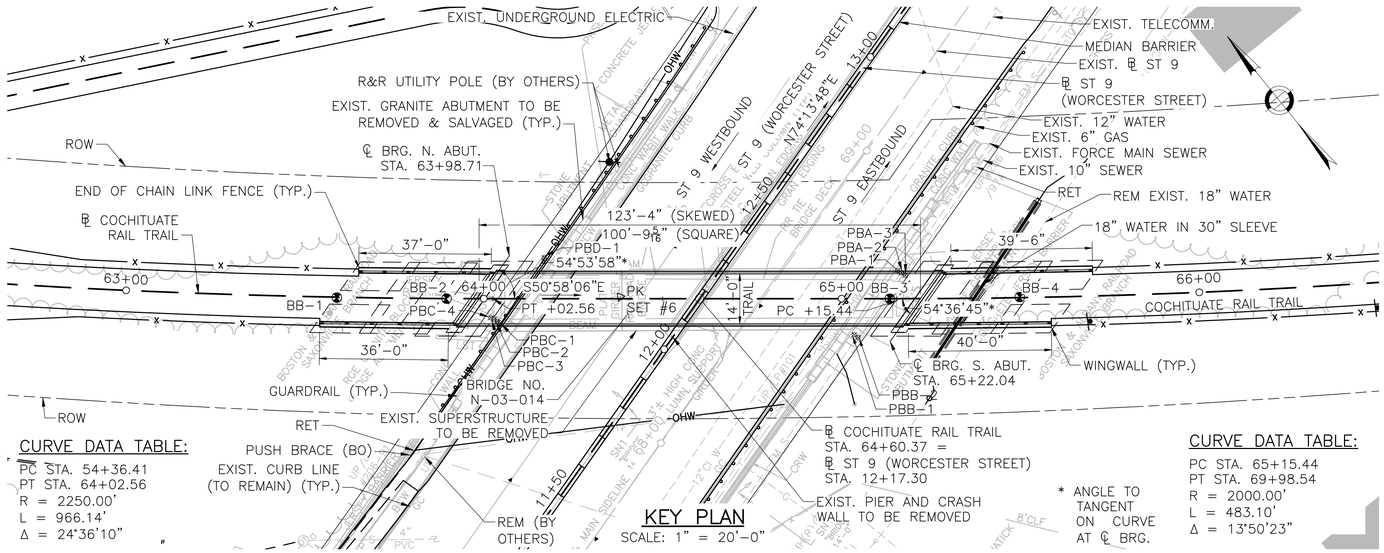

CURVE DATA TABLE:

PC STA. 54+36.41
PT STA. 64+02.56
R = 2250.00'
L = 966.14'
Δ = 24°36'10"

KEY PLAN

SCALE: 1" = 20'-0"

CURVE DATA TABLE:

PC STA. 65+15.44
PT STA. 69+98.54
R = 2000.00'
L = 483.10'
Δ = 13°50'23"

* ANGLE TO TANGENT ON CURVE AT ℄ BRG.

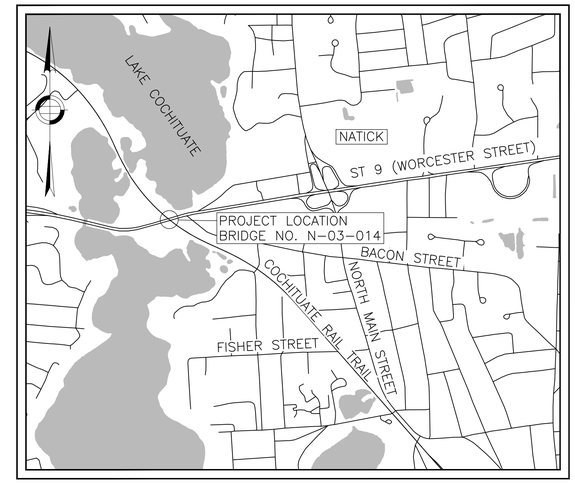

LOCUS

SCALE: 1" = 1000'-0"

NATICK
COCHITUATE RAIL TRAIL

STATE	FED. AID PROJ. NO.	SHEET NO.	TOTAL SHEETS
MA	STP(TE)/TAP/CMQ-0035(206)	153	253
PROJECT FILE NO. 607732			

TITLE SHEET

SHEET INDEX

TITLE SHEET	1
GENERAL NOTES & ESTIMATED QUANTITIES	2
BORING LOG (1 OF 2)	3
BORING LOG (2 OF 2)	4
PROBES	5
GENERAL PLAN & ELEVATION	6
BRIDGE DEMOLITION	7
NORTH ABUTMENT PLAN & ELEVATIONS	8
SOUTH ABUTMENT PLAN & ELEVATIONS	9
ABUTMENT & WINGWALL SECTIONS	10
SUBSTRUCTURE DETAILS (1 OF 2)	11
SUBSTRUCTURE DETAILS (2 OF 2)	12
TRANSVERSE SECTION & MISCELLANEOUS DETAILS	13
PEDESTRIAN RAIL DETAILS	14

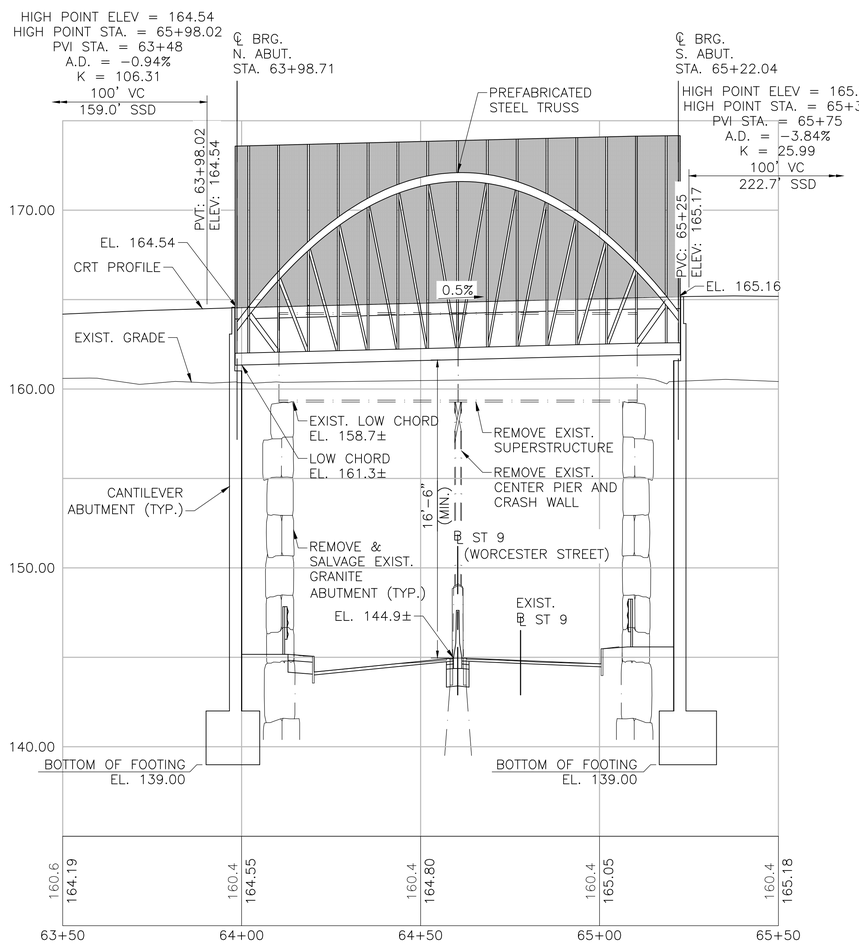

COCHITUATE RAIL TRAIL PROFILE

HORIZONTAL SCALE: 1" = 20'-0" VERTICAL SCALE 1/4" = 1'-0"

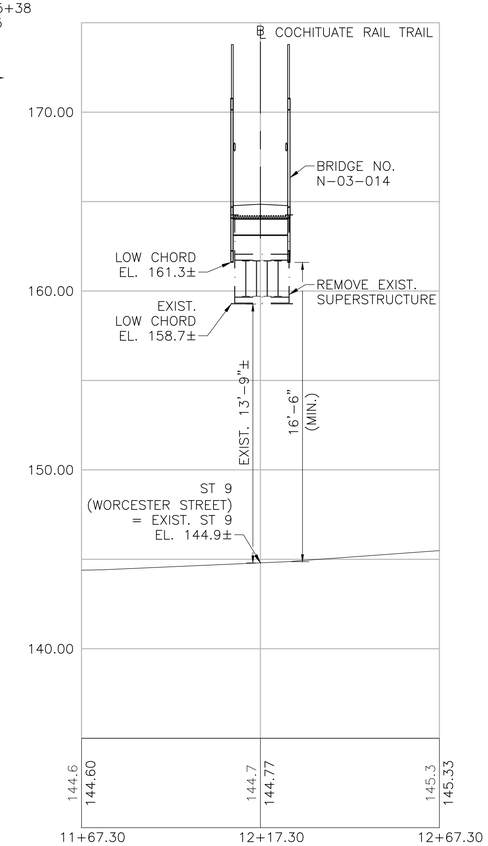

ST 9 (WORCESTER STREET) PROFILE

HORIZONTAL SCALE: 1" = 20'-0" VERTICAL SCALE 1/4" = 1'-0"

SEPT. 8, 2018	ISSUED FOR CONSTRUCTION

massDOT Massachusetts Department of Transportation Highway Division

PROPOSED BRIDGE
NATICK
COCHITUATE RAIL TRAIL
OVER ST 9 (WORCESTER STREET)

MASSACHUSETTS DEPARTMENT OF TRANSPORTATION
HIGHWAY DIVISION
10 PARK PLAZA BOSTON, MASS

BETA www.BETA-Inc.com

TITLE: CHIEF ENGINEER

SHEET 1 OF 14 SHEETS BRIDGE NO. N-03-014 (BQE)

607732_BR1(N03014).DWG Plotted on 20-Aug-2018 4:27 PM

Final Structural Submittal (SF) 08-September-2018

NATICK
COCHITUATE RAIL TRAIL

STATE	FED. AID PROJ. NO.	SHEET NO.	TOTAL SHEETS
MA	STP(TE)/TAP/CMQ-0035(206)	154	253
PROJECT FILE NO. 607732			

GENERAL NOTES & ESTIMATED QUANTITIES

GENERAL NOTES:

DESIGN

IN ACCORDANCE WITH THE 2009 LRFD GUIDE SPECIFICATIONS FOR THE DESIGN OF PEDESTRIAN BRIDGES WITH CURRENT 2015 INTERIM REVISIONS AND THE 2014 AMERICAN ASSOCIATION OF STATE HIGHWAY AND TRANSPORTATION OFFICIALS LRFD BRIDGE DESIGN SPECIFICATIONS WITH CURRENT INTERIM SPECIFICATIONS THROUGH 2017 FOR 90 PSF PEDESTRIAN/H10 LOADING, WHICHEVER CONTROLS.

MASSDOT BENCHMARK

PK SET #7121	PK SET #5	PK SET #6
GROUND	GROUND	BRIDGE DECK
N = 2933975.8	N = 2933884.1	N = 2933991.2
E = 691709.9	E = 691701.8	E = 691826.8
ELEV. = 144.23	ELEV. = 144.03	ELEV. = 160.94

ELEVATIONS ARE BASED ON THE NORTH AMERICAN VERTICAL DATUM (NAVD) OF 1988.

MASSDOT SURVEY NOTEBOOKS

AN ON-THE-GROUND INSTRUMENT FIELD SURVEY WAS PERFORMED BY GCG ASSOCIATES OF WILMINGTON, MA BETWEEN JANUARY 27 AND FEBRUARY 12 OF 2016.

MASSDOT FIELD BOOK 24392.

SCALES

SCALES NOTED ON THE PLANS ARE NOT APPLICABLE TO REDUCED SIZE PRINTS. DIVIDE SCALES BY 2 FOR HALF-SIZE PRINTS (A3).

FOUNDATIONS

FOUNDATIONS MAY BE ALTERED, IF NECESSARY, TO SUIT CONDITIONS ENCOUNTERED DURING CONSTRUCTION, WITH THE APPROVAL OF THE ENGINEER.

UNSUITABLE MATERIAL

ALL UNSUITABLE MATERIAL SHALL BE REMOVED WITHIN THE LIMITS OF THE FOUNDATIONS OF THE STRUCTURE, AS DIRECTED BY THE ENGINEER.

SEISMIC GROUND SHAKING HAZARD

DESIGN RETURN PERIOD: 2500 YEARS

DESIGN SPECTRA:
A_S = 0.144
S_{DS} = 0.240
S_{D1} = 0.132

SITE CLASS = D
SEISMIC DESIGN CATEGORY (SDC) = A

ANCHOR BOLTS

ALL ANCHOR BOLTS SHALL BE SET BY TEMPLATE BEFORE CONCRETE IS PLACED.

REINFORCEMENT

REINFORCING STEEL SHALL CONFORM TO THE REQUIREMENTS OF AASHTO M 31 GRADE 60. UNLESS OTHERWISE NOTED ON THE CONSTRUCTION DRAWINGS, ALL BARS SHALL BE LAPPED AS FOLLOWS:

MODIFICATION CLASSIFICATION	#4 BARS	#5 BARS	#6 BARS	#7 BARS
1. NONE	19"	24"	29"	33"
2. 12" OF CONCRETE BELOW BAR	25"	31"	37"	43"
3. COATED BARS, COVER <3db, OR CLEAR SPACING <6db	29"	36"	43"	50"
4. COATED BARS, ALL OTHER CASES	23"	29"	34"	40"
5. CONDITION 2 AND 3.	37"	46"	55"	64"
6. CONDITION 2 AND 4.	30"	37"	44"	52"

IF THE ABOVE BARS ARE SPACED 6" OR MORE ON CENTER, THE LAP LENGTH SHALL BE 80% OF THE LAP LENGTH GIVEN ABOVE. ALL OTHER BARS SHALL BE LAPPED AS SHOWN ON THE CONSTRUCTION DRAWINGS.

EXISTING BRIDGE PLANS:

FOR DETAILS OF EXISTING BRIDGE STRUCTURES TO BE DEMOLISHED, SEE BRIDGE PLANS FOR BRIDGE NO. N-03-014. A COPY OF THESE PLANS CAN BE OBTAINED FROM THE MASSACHUSETTS DEPARTMENT OF TRANSPORTATION - HIGHWAY DIVISION AT 10 PARK PLAZA BOSTON, MA 02116.

EXISTING CONDITIONS:

CONTRACTOR TO VERIFY EXISTING GRADES. IF ANY ADJUSTMENT IS REQUIRED DUE TO DIFFERENT EXISTING GRADES FOUND IN THE FIELD, THE CONTRACTOR SHALL NOTIFY AND SEEK THE APPROVAL OF THE ENGINEER PRIOR TO PERFORMING THE WORK.

CONCRETE SCHEDULE:

CONCRETE TYPE:	APPLICATION:
4000 PSI, $1\frac{1}{2}$ IN., 565 CEMENT CONCRETE	APPROACH SLABS, ABUTMENTS & WINGWALLS
4000 PSI, $\frac{3}{4}$ IN., 610 CEMENT CONCRETE	BACKWALL, CURTAIN WALL
4000 PSI, $\frac{3}{4}$ IN., 585 HP CEMENT CONCRETE	CONCRETE DECK

ESTIMATED QUANTITIES
(NOT GUARANTEED)

ITEM DESCRIPTION	QUANTITY	UNITS
DEMOLITION OF BRIDGE NO. N-03-014 (7JV)	1	LS
BRIDGE EXCAVATION	1600	CY
GRAVEL BORROW FOR BACKFILLING STRUCTURES AND PIPES	845	CY
DISPOSAL OF TREATED WOOD PRODUCTS	20	TON
LIGHTWEIGHT AGGREGATE	70	CY
BRIDGE STRUCTURE, BRIDGE NO. N-03-014 (BQE)	1	LS

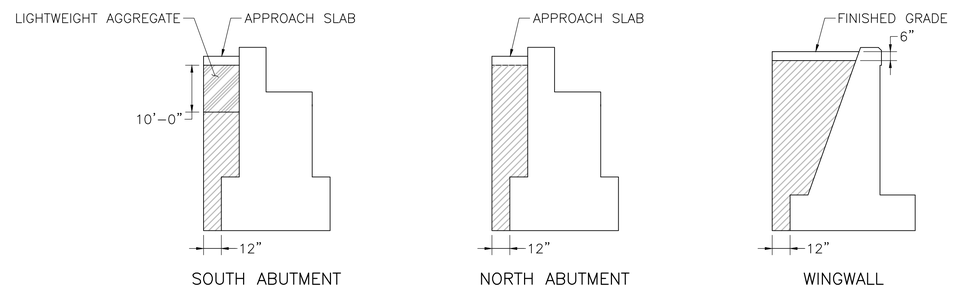

NOTE:
- HATCHED AREA INDICATES LIMITS OF GRAVEL BORROW FOR BACKFILLING STRUCTURES AND PIPES
- HATCHED AREA INDICATES LIMITS OF LIGHTWEIGHT AGGREGATE

LIMITS OF GRAVEL BORROW FOR BACKFILLING STRUCTURES AND PIPES AND LIGHTWEIGHT AGGREGATE
NOT TO SCALE

DATE	DESCRIPTION
SEPT. 8, 2018	ISSUED FOR CONSTRUCTION
USE ONLY PRINTS OF LATEST DATE	

607732_BR2(N03014).DWG Plotted on 20-Aug-2018 4:30 PM
Final Structural Submittal (SF) 08-September-2018

NATICK
COCHITUATE RAIL TRAIL

STATE	FED. AID PROJ. NO.	SHEET NO.	TOTAL SHEETS
MA	STP(TE)/TAP/CMQ-003S(206)	155	253
PROJECT FILE NO. 607732			

BORING LOG (1 OF 2)

BORING NOTES:

1. LOCATIONS OF BORINGS SHOWN ON THE PLAN THUS: ◓ BB-1
2. BORINGS ARE TAKEN FOR PURPOSE OF DESIGN AND SHOW CONDITIONS AT BORING POINTS ONLY, BUT DO NOT NECESSARILY SHOW THE NATURE OF THE MATERIALS TO BE ENCOUNTERED DURING CONSTRUCTION.
3. WATER LEVELS SHOWN ON THE BORING LOGS WERE OBSERVED AT THE TIME OF TAKING BORINGS AND DO NOT NECESSARILY SHOW THE TRUE GROUND WATER LEVEL.
4. FIGURES IN COLUMNS INDICATE NUMBER OF BLOWS REQUIRED TO DRIVE A 1 3/8" I.D. SPLIT SPOON SAMPLER 6" USING A 140 POUND WEIGHT FALLING 30".
5. BORING SAMPLES ARE STORED AT A STORAGE FACILITY LOCATED ON ROUTE 114 (219 WINTHROP AVE.) IN LAWRENCE, MA. THE CONTRACTOR MAY EXAMINE THE SOIL AND ROCK SAMPLES BY CONTACTING MASSDOT GEOTECHNICAL SECTION AT 10 PARK PLAZA, BOSTON, MA.
6. ALL BORINGS WERE MADE IN APRIL, 2017.
7. BORINGS WERE MADE BY NORTHERN DRILL SERVICE, INC., 130 EAST MAIN STREET BLDG A, NORTHBOROUGH, MA 01532.
8. THE NORTH AMERICAN VERTICAL DATUM (NAVD) OF 1988 IS USED THROUGHOUT.

BORING BB-1

BORING INFORMATION
LOCATION: South Bridge Abutment
GROUND SURFACE EL. (ft): ~160 — **DATE START/END:** 4/18/2017 - 4/19/2017
VERTICAL DATUM: NAVD 88 — **DRILLING COMPANY:** Northern Drill Service, Inc.
TOTAL DEPTH (ft): 51.0 — **DRILLER NAME:** T. Tucker
LOGGED BY: J. Passno — **RIG TYPE:** Mobile B-48 Track Rig

DRILLING INFORMATION
HAMMER TYPE: Automatic — **CASING I.D./O.D.:** 4 inch / 4.5 inch — **CORE BARREL TYPE:** NA
AUGER I.D./O.D.: NA / NA — **DRILL ROD O.D.:** NM — **CORE BARREL I.D./O.D.** NA / NA
DRILLING METHOD: Driven casing and washed with rotary tooling.
WATER LEVEL DEPTHS (ft): ▽ 24.7 4/20/2017 ▼ 25.0 5/19/2017

ABBREVIATIONS: Pen. = Penetration Length; Rec. = Recovery Length; RQD = Rock Quality Designation = Length of Sound Cores>4 in / Pen.,%; WOR = Weight of Rods; WOH = Weight of Hammer; S = Split Spoon Sample; C = Core Sample; U = Undisturbed Sample; SC = Sonic Core; DP = Direct Push Sample; HSA = Hollow-Stem Auger; Qp = Pocket Penetrometer Strength; Sv = Pocket Torvane Shear Strength; LL = Liquid Limit; PI = Plasticity Index; PID = Photoionization Detector; I.D./O.D. = Inside Diameter/Outside Diameter; NA, NM = Not Applicable, Not Measured; Blows per 6 in.: 140-lb hammer falling 30 inches to drive a 2-inch-O.D. split spoon sampler.

Elev. (ft)	Depth (ft)	Sample No.	Depth (ft)	Pen./ Rec. (in)	Blows per 6 in. or RQD	Drilling Remarks/ Field Test Data	Layer Name	Soil and Rock Description
160		S1	0 to 2	24/11	4-14-8-7		FILL	S1: Dry, medium dense, light brown, COARSE SAND, some fine gravel and fine sand, trace silt.
155	5	S2	4 to 6	24/9	9-11-17-19		FILL	S2: Wet, medium dense, brown, FINE TO COARSE SAND, some silt, trace fine gravel.
150	10	S3	9 to 11	24/12	5-6-9-23		FILL	S3: Wet, medium dense, brown, FINE TO COARSE SAND, some fine to medium gravel, some silt.
								N. WINGWALL A BOTTOM OF FOOTING EL. 149.00
145	15	S4	14 to 16	24/14	27-26-11-13		SAND AND GRAVEL	S4 TOP 8: Wet, dense, brown, FINE GRAVEL, some fine to coarse sand, trace fine silt. S4 BOT 6: Wet, dense, brown, SILT AND FINE SAND.
								N. WINGWALL B BOTTOM OF FOOTING EL. 144.00
140	20	S5	19 to 21	24/9	12-13-11-11		SAND AND GRAVEL	S5: Wet, medium dense, brown, FINE GRAVEL, some fine to coarse sand, trace silt, trace coarse gravel.
135	25	S6	24 to 26	24	12-11-10-6	▽ OBSERVED GROUNDWATER ELEVATION	SAND AND GRAVEL	S6: Wet, medium dense, brown, FINE TO COARSE SAND, some fine to coarse gravel, trace silt.
130	30	S7	29 to 31	24/11	12-12-10-12		SAND AND GRAVEL	S7: Wet, medium dense, brown, FINE GRAVEL and medium gravel, some coarse sand, trace fine sand, trace silt.
125	35	S8	34 to 36	24/10	11-11-8-8		SAND AND GRAVEL	S8: Wet, medium dense, brown, FINE TO COARSE SAND, some fine gravel, trace silt.
120	40	S9	40 to 42	24/8	12-10-9-10		SAND AND GRAVEL	S9: Wet. medium dense, brown and orange, FINE TO COARSE SAND, some fine gravel, trace silt.
115	45	S10	44 to 46	24/8	12-11-9-10		SAND AND GRAVEL	S10: Wet, medium dense, brown, FINE TO COARSE SAND, some fine to medium gravel, trace silt.
110	50	S11	49 to 51	24/6	13-9-11-13		SAND AND GRAVEL	S11: Wet, medium dense, brown, FINE TO MEDIUM GRAVEL, some fine to coarse sand, trace silt.
105	55							Bottom of boring at depth 51 ft. Installed groundwater observation well upon completion of boring. See separate Well Installation Log.

NOTES:
PROJECT NAME: Cochituate Rail Trail over Route 9
CITY/STATE: Natick, MA
GEI PROJECT NUMBER: 1701690
GEI Consultants

GEI WOBURN STD 1-LOCATION-LAYER NAME 1701690 - CRT OVER ROUTE 9.GPJ 5/19/17

TD 1-LOCATION-LAYER NAME 1701690 - CRT OVER ROUTE 9.GPJ 5/19/17

BORING BB-1
SCALE: 1/4" = 1'-0"

BORING BB-2

BORING INFORMATION
LOCATION: South Bridge Abutment
GROUND SURFACE EL. (ft): ~160 — **DATE START/END:** 4/14/2017 - 4/17/2017
VERTICAL DATUM: NAVD 88 — **DRILLING COMPANY:** Northern Drill Service, Inc.
TOTAL DEPTH (ft): 106.0 — **DRILLER NAME:** T. Tucker
LOGGED BY: N. Mazzella — **RIG TYPE:** Mobile B-48 Track Rig

DRILLING INFORMATION
HAMMER TYPE: Automatic — **CASING I.D./O.D.:** 4 inch / 4.5 inch — **CORE BARREL TYPE:** NA
AUGER I.D./O.D.: NA / NA — **DRILL ROD O.D.:** NM — **CORE BARREL I.D./O.D.** NA / NA
DRILLING METHOD: Driven casing and washed with rotary tooling.
WATER LEVEL DEPTHS (ft): ▼ 25.4 4/17/2017

ABBREVIATIONS: Pen. = Penetration Length; Rec. = Recovery Length; RQD = Rock Quality Designation = Length of Sound Cores>4 in / Pen.,%; WOR = Weight of Rods; WOH = Weight of Hammer; S = Split Spoon Sample; C = Core Sample; U = Undisturbed Sample; SC = Sonic Core; DP = Direct Push Sample; HSA = Hollow-Stem Auger; Qp = Pocket Penetrometer Strength; Sv = Pocket Torvane Shear Strength; LL = Liquid Limit; PI = Plasticity Index; PID = Photoionization Detector; I.D./O.D. = Inside Diameter/Outside Diameter; NA, NM = Not Applicable, Not Measured; Blows per 6 in.: 140-lb hammer falling 30 inches to drive a 2-inch-O.D. split spoon sampler.

Elev. (ft)	Depth (ft)	Sample No.	Depth (ft)	Pen./ Rec. (in)	Blows per 6 in. or RQD	Drilling Remarks/ Field Test Data	Layer Name	Soil and Rock Description
160		S1	0 to 2	24/7	5-18-12-27		FILL	S1: Dry, medium dense, brown, COARSE SAND and fine gravel, trace silt.
155	5	S2	4 to 6	24/8	7-9-11-12		FILL	S2: Wet, medium dense, brown, FINE TO COARSE GRAVEL, some fine to coarse sand, some silt. <Grain Size> 41.8% gravel, 36% sand, 22.6% nonplastic fines.
150	10	S3	9 to 11	24/9	9-12-10-13		FILL	S3: Wet, medium dense, light brown, COARSE SAND, some fine gravel, trace silt.
145	15	S4	14 to 16	24/9	21-32-27-23		SAND AND GRAVEL	S4: Wet, very dense, brown, FINE GRAVEL and coarse sand, some coarse gravel, trace silt.
140	20	S5	19 to 21	24/9	11-12-11-28		SAND AND GRAVEL	S5: Wet, medium dense, brown, COARSE SAND, some silt and fine gravel.
								N. ABUT. BOTTOM OF FOOTING EL. 139.00
135	25	S6	24 to 26	24/5	10-13-10-11	▽ OBSERVED GROUNDWATER ELEVATION	SAND AND GRAVEL	S6: Wet, medium dense, brown, COARSE SAND and fine gravel, some fine sand, trace silt.
130	30	S7	29 to 31	24/6	33-10-9-10		SAND AND GRAVEL	S7: Wet, medium dense, brown, COARSE SAND, some fine gravel, trace silt.
125	35	S8	34 to 36	24/7	24-13-10-9	Boulder at about 33 - 34 ft, driller roller bit through.	SAND AND GRAVEL	S8: Wet, medium dense, light brown, FINE GRAVEL, some coarse sand, trace fine sand, trace silt.
120	40	S9	39 to 41	24/2	14-13-14-12		SAND AND GRAVEL	S9: Wet, medium dense, brown, COARSE SAND and fine gravel, trace silt. Piece of gravel stuck in tip.
115	45	S10	44 to 46	24/7	14-11-8-8		SAND AND GRAVEL	S10: Wet, medium dense, brown, COARSE SAND, some fine gravel, trace silt.
110	50	S11	49 to 51	24/8	12-12-11-11		SAND AND GRAVEL	S11: Wet, medium dense, brown, COARSE SAND, some fine gravel, trace silt.
105	55	S12	54 to 56	24/7	22-14-16-11			

NOTES:
PROJECT NAME: Cochituate Rail Trail over Route 9
CITY/STATE: Natick, MA
GEI PROJECT NUMBER: 1701690
GEI Consultants

GEI WOBURN STD 1-LOCATION-LAYER NAME 1701690 - CRT OVER ROUTE 9.GPJ 5/19/17

TD 1-LOCATION-LAYER NAME 1701690 - CRT OVER ROUTE 9.GPJ 5/19/17

BORING BB-2
SCALE: 1/4" = 1'-0"

BORING BB-2 (continued)

LOCATION: South Bridge Abutment
GROUND SURFACE EL. (ft): ~160 — **DATE START/END:** 4/14/2017 - 4/17/2017
VERTICAL DATUM: NAVD 88 — **DRILLING COMPANY:** Northern Drill Service, Inc.

Elev. (ft)	Depth (ft)	Sample No.	Depth (ft)	Pen./ Rec. (in)	Blows per 6 in. or RQD	Drilling Remarks/ Field Test Data	Layer Name	Soil and Rock Description
100							GRAVEL	S12: Wet, dense, brown and blue, FINE TO MEDIUM GRAVEL, some coarse sand, trace silt.
100	60	S13	59 to 61	24/4	20-13-9-14		GRAVEL	S13: Wet, medium dense, gray and brown, FINE TO MEDIUM GRAVEL, some coarse sand, trace fine sand.
						Rig jumped at about 63 ft.		
95	65	S14	64 to 66	24/4	20-22-10-9		GRAVEL	S14: Wet, dense, dark gray, FINE TO MEDIUM GRAVEL, some fine to coarse sand, trace silt.
90	70	S15	69 to 71	24/11	11-20-24-29		FINE SAND AND SILT	S15: Wet, dense, brown, COARSE SAND, some fine sand, trace silt.
85	75	S16	74 to 76	24/12	15-19-23-26		FINE SAND AND SILT	S16: Wet, dense, gray, FINE SAND, some coarse sand, some silt.
80	80	S17	79 to 81	24/13	17-20-26-31		FINE SAND AND SILT	S17: Wet, dense, gray, FINE SAND, some coarse sand, some silt.
75	85	S18	84 to 86	24/24	20-30-33-29		FINE SAND AND SILT	S18 Top 18": Wet, dense, gray, FINE SAND, some coarse sand, some silt. S18 Bot 6": We, dense, gray, INORGANIC SILT, some fine sand.
70	90	S19	89 to 91	24/20	19-24-32-32		FINE SAND AND SILT	S19 Top 7": Wet, very dense, gray, FINE SAND, some coarse sand, some silt. S19 Mid 3": Wet, very dense, gray, COARSE SAND, trace silt. S19 Bot 10": Wet, very dense, gray, FINE SAND, some coarse sand, some silt.
65	95	S20	94 to 96	24/20	20-36-48-47		FINE SAND AND SILT	S20 Top 9": Wet, very dense, gray, FINE SAND and coarse sand, trace silt. S20 Mid 4": Wet, very dense, gray, COARSE SAND, trace silt. S20 Bot 7": Wet, very dense, gray, FINE SAND, some coarse sand, some silt.
60	100	S21	99 to 101	24/13	22-26-36-35		FINE SAND AND SILT	S21: Wet, very dense, gray, FINE SAND, some silt.
55	105	S22	104 to 106	24/12	20-31-36-38		FINE SAND AND SILT	S22: Wet, very dense, gray, FINE SAND, some silt.
50	110							Bottom of boring at depth 106 ft. Boring backfilled with soil cuttings upon completion.
45	115							

NOTES:
PROJECT NAME: Cochituate Rail Trail over Route 9
CITY/STATE: Natick, MA
GEI PROJECT NUMBER: 1701690
GEI Consultants

GEI WOBURN STD 1-LOCATION-LAYER NAME 1701690 - CRT OVER ROUTE 9.GPJ 5/19/17

TD 1-LOCATION-LAYER NAME 1701690 - CRT OVER ROUTE 9.GPJ 5/19/17

BORING BB-2 CONTINUED
SCALE: 1/4" = 1'-0"

DATE	DESCRIPTION
SEPT. 8, 2018	ISSUED FOR CONSTRUCTION
USE ONLY PRINTS OF LATEST DATE	

607732_BR3(N03014).DWG Plotted on 20-Aug-2018 4:31 PM
Final Structural Submittal (SF) 08-September-2018

BORING LOG (2 OF 2)

BORING INFORMATION

LOCATION: North Bridge Abutment
GROUND SURFACE EL. (ft): ~160 **DATE START/END:** 4/18/2017 - 4/21/2017
VERTICAL DATUM: NAVD 88 **DRILLING COMPANY:** Northern Drill Service, Inc.
TOTAL DEPTH (ft): 96.0 **DRILLER NAME:** T. Tucker
LOGGED BY: J. Passno **RIG TYPE:** Mobile B-48 Track Rig

BORING
BB-3

DRILLING INFORMATION

HAMMER TYPE: Automatic **CASING I.D./O.D.:** 4 inch / 4.5 inch **CORE BARREL TYPE:** NA
AUGER I.D./O.D.: NA / NA **DRILL ROD O.D.:** NM **CORE BARREL I.D./O.D.** NA / NA
DRILLING METHOD: Driven casing and washed with rotary tooling.
WATER LEVEL DEPTHS (ft): ▽ 24.4 4/20/2017

ABBREVIATIONS:
Pen. = Penetration Length
Rec. = Recovery Length
RQD = Rock Quality Designation
= Length of Sound Cores÷4 in / Pen.,%
WOR = Weight of Rods
WOH = Weight of Hammer
S = Split Spoon Sample
C = Core Sample
U = Undisturbed Sample
SC = Sonic Core
DP = Direct Push Sample
HSA = Hollow-Stem Auger
Qp = Pocket Penetrometer Strength
Sv = Pocket Torvane Shear Strength
LL = Liquid Limit
PI = Plasticity Index
PID = Photoionization Detector
I.D./O.D. = Inside Diameter/Outside Diameter
NA, NM = Not Applicable, Not Measured
Blows per 6 in.: 140-lb hammer falling 30 inches to drive a 2-inch-O.D. split spoon sampler.

Elev. (ft)	Depth (ft)	Sample No.	Depth (ft)	Pen./ Rec. (in)	Blows per 6 in. or RQD	Drilling Remarks/ Field Test Data	Layer Name	Soil and Rock Description
		S1	0 to 2	24/8	5-15-12-11		FILL	S1: Dry, medium dense, brown to black, FINE SAND, some fine to medium gravel, trace silt.
	5	S2	4 to 6	24/11	9-15-9-9			S2: Wet, medium dense, brown, FINE TO COARSE SAND, some fine to medium gravel, some silt. <Grain Size> 45.8% sand, 35.7% gravel, 18.5% nonplastic fines.
	10	S3	9 to 11	24/13	6-7-7-13			S3 TOP 5": Wet, medium dense, light brown, FINE SAND, some coarse sand, some silt. S3 MID 4": Wet, medium dense, light brown, FINE SAND and silt, trace coarse sand. S3 BOT 4": Wet, medium dense, light brown, COARSE SAND, some fine sand, trace silt. <Grain Size TOP 5"> 62.3% sand, 37.1% nonplastic fines, 0.6% gravel.
	15	S4	14 to 16	24/5	16-16-15-16			S4: Wet, medium dense, brown, FINE TO COARSE SAND, some fine gravel, trace silt.
								S. ABUT. BOTTOM OF FOOTING EL. 139.00
	20	S5	19 to 21	24/8	4-11-8-10		SAND AND GRAVEL	S5: Wet, medium dense, brown, FINE GRAVEL and coarse sand, some fine sand, trace silt.
		S6	21 to 23	24/16	15-8-8-11			S6 TOP 9": Wet, medium dense, brown, FINE TO MEDIUM GRAVEL, some fine to coarse sand, trace silt. S6 BOT 8": Wet, medium dense, brown, FINE TO COARSE SAND, some silt, trace fine gravel.
		S7	23 to 25	24/11	9-9-6-10			S7: Wet, medium dense, brown, FINE SAND, some coarse sand and silt.
	25	S8	25 to 27	24/12	28-17-40-31		SAND AND GRAVEL	S8: Wet, very dense, brown, COARSE SAND, some fine sand and fine gravel, trace silt.
								OBSERVED GROUNDWATER ELEVATION
	30	S9	29 to 31	24/11	10-12-13-14			S9: Wet, medium dense, brown, COARSE SAND, some fine gravel, trace fine sand, trace silt.
	35	S10	34 to 36	24/0	13-15-16-17		GRAVEL	S10: No recovery. Rock stuck in tip of split spoon.
	40	S11	39 to 41	24/9	15-14-16-11			S11: Wet, dense, brown and black, FINE GRAVEL, some coarse sand, trace medium gravel, trace fine sand, trace silt.
	45	S12	44 to 46	24/6	12-14-7-10			S12: Wet, medium dense, brown and black, FINE GRAVEL, some medium gravel and coarse sand, trace fine sand.
	50	S13	49 to 51	24/7	11-14-13-12			S13: Wet, medium dense, black and brown, FINE GRAVEL, some fine to coarse sand, trace medium gravel, trace silt.
	55	S14	54 to 56	24/8	11-22-21-10			S14: Wet, dense, black, FINE GRAVEL, some coarse sand and medium gravel.

160 155 150 145 140 135 130 125 120 115 110 105

NOTES:

PROJECT NAME: Cochituate Rail Trail over Route 9
CITY/STATE: Natick, MA
GEI PROJECT NUMBER: 1701690
GEI Consultants

GEI WOBURN STD 1-LOCATION-LAYER NAME: 1701690 - CRT OVER ROUTE 9.GPJ 5/18/17

BORING BB-3
SCALE: $\frac{1}{4}$" = 1'-0"

LOCATION: North Bridge Abutment
GROUND SURFACE EL. (ft): ~160 **DATE START/END:** 4/18/2017 - 4/21/2017
VERTICAL DATUM: NAVD 88 **DRILLING COMPANY:** Northern Drill Service, Inc.

BORING
BB-3

Elev. (ft)	Depth (ft)	Sample No.	Depth (ft)	Pen./ Rec. (in)	Blows per 6 in. or RQD	Drilling Remarks/ Field Test Data	Layer Name	Soil and Rock Description
	60	S15	59 to 61	24/0	14-9-6-7		GRAVEL	S15: No recovery. Rock stuck in tip of split spoon. S15 Redrive: Wet, medium dense, brown, MEDIUM GRAVEL, some fine gravel and coarse sand, trace fine sand, trace silt.
	65	S16	64 to 66	24/6	9-16-15-14			S16: Wet, dense, black and brown, FINE TO COARSE GRAVEL, some fine to coarse sand, trace silt.
	70	S17	69 to 71	24/0	22-11-6-7			S17: No recovery. S17 Redrive: Wet, medium dense, black and brown, MEDIUM GRAVEL, some fine gravel, trace coarse sand.
	75	S18	74 to 76	24/0	10-12-14-19			S18: No recovery. S18 Redrive: Wet, medium dense, gray, MEDIUM GRAVEL.
	80	S19	79 to 81	24/12	14-19-26-37		FINE SAND AND SILT	S19 TOP 6: Wet, dense, gray-brown, COARSE SAND, some fine sand and fine gravel. S19 BOT 6: Wet, dense, gray, FINE SAND, some silt, trace coarse sand.
	85	S20	84 to 86	24/13	17-21-24-30			S20: Wet, dense, gray, FINE TO COARSE SAND, trace silt.
	90	S21	89 to 91	24/6	16-30-41-50		FINE SAND AND SILT	S21: Wet, very dense, gray, FINE SAND, some silt.
	95	S22	94 to 96	24/19	19-34-40-43			S22: Wet, very dense, gray, FINE SAND, some silt.
								Bottom of boring at depth 96 ft. Boring backfilled with soil cuttings upon completion.

100 95 90 85 80 75 70 65 60 55 50 45

NOTES:

PROJECT NAME: Cochituate Rail Trail over Route 9
CITY/STATE: Natick, MA
GEI PROJECT NUMBER: 1701690
GEI Consultants

GEI WOBURN STD 1-LOCATION-LAYER NAME: 1701690 - CRT OVER ROUTE 9.GPJ 5/18/17

BORING BB-3 CONTINUED
SCALE: $\frac{1}{4}$" = 1'-0"

BORING INFORMATION

LOCATION: North Bridge Abutment
GROUND SURFACE EL. (ft): ~160 **DATE START/END:** 4/21/2017 - 4/24/2017
VERTICAL DATUM: NAVD 88 **DRILLING COMPANY:** Northern Drill Service, Inc.
TOTAL DEPTH (ft): 51.0 **DRILLER NAME:** T. Tucker
LOGGED BY: J. Passno **RIG TYPE:** Mobile B-48 Track Rig

BORING
BB-4

DRILLING INFORMATION

HAMMER TYPE: Automatic **CASING I.D./O.D.:** 4 inch / 4.5 inch **CORE BARREL TYPE:** NA
AUGER I.D./O.D.: NA / NA **DRILL ROD O.D.:** NM **CORE BARREL I.D./O.D.** NA / NA
DRILLING METHOD: Driven casing and washed with rotary tooling.
WATER LEVEL DEPTHS (ft): ▼ 24.6

ABBREVIATIONS:
Pen. = Penetration Length
Rec. = Recovery Length
RQD = Rock Quality Designation
= Length of Sound Cores÷4 in / Pen.,%
WOR = Weight of Rods
WOH = Weight of Hammer
S = Split Spoon Sample
C = Core Sample
U = Undisturbed Sample
SC = Sonic Core
DP = Direct Push Sample
HSA = Hollow-Stem Auger
Qp = Pocket Penetrometer Strength
Sv = Pocket Torvane Shear Strength
LL = Liquid Limit
PI = Plasticity Index
PID = Photoionization Detector
I.D./O.D. = Inside Diameter/Outside Diameter
NA, NM = Not Applicable, Not Measured
Blows per 6 in.: 140-lb hammer falling 30 inches to drive a 2-inch-O.D. split spoon sampler.

Elev. (ft)	Depth (ft)	Sample No.	Depth (ft)	Pen./ Rec. (in)	Blows per 6 in. or RQD	Drilling Remarks/ Field Test Data	Layer Name	Soil and Rock Description
		S1	0 to 2	24/12	3-7-9-12		FILL	S1: Dry, medium dense, brown, COARSE SAND, some medium gravel and fine sand, trace fine gravel, trace silt.
	5	S2	4 to 6	24/0	20-23-29-31			S2: No recovery. S2 Redrive: Wet, dense, brown, FINE GRAVEL, some fine to coarse sand, some medium gravel, trace silt.
	10	S3	9 to 11	24/11	10-10-9-10			S3: Wet, medium dense, brown, FINE TO COARSE SAND, some fine to medium gravel, some fine sand, trace silt. <Grain Size> 50.5% sand, 42.3% gravel, 7.2% nonplastic fines.
								S. WINGWALL A BOTTOM OF FOOTING EL. 147.00
	15	S4	14 to 16	24/9	8-5-5-7			S4: Wet, medium dense, brown, COARSE SAND, some fine gravel, some fine sand, trace silt.
								S. WINGWALL B BOTTOM OF FOOTING EL. 142.00
	20	S5	19 to 21	24/10	9-9-7-6		SAND AND GRAVEL	S5: Wet, medium dense, brown, FINE SAND, some coarse gravel, some fine sand, trace silt.
		S6	21 to 23	24/3	10-9-20-23			S6: Wet, medium dense, brown, COARSE SAND, some fine gravel, trace fine sand, trace silt.
		S7	23 to 25	24/12	27-20-15-12			S7: Wet, dense, brown, FINE TO COARSE SAND, some fine gravel, trace medium gravel, trace silt.
	25	S8	25 to 27	24/19	15-13-15-15		SAND AND GRAVEL	S8: Wet, medium dense, brown, FINE TO COARSE SAND, some fine gravel, trace silt.
								OBSERVED GROUNDWATER ELEVATION
	30	S9	29 to 31	24/10	7-10-14-12			S9: Wet, medium dense, brown, FINE GRAVEL, some fine to coarse sand, some medium gravel, trace silt.
	35	S10	34 to 36	24/0	11-11-7-9		GRAVEL	S10: No recovery. S10 Redrive: No recovery.
	40	S11	39 to 41	24/3	5-5-7-9			S11: Wet medium dense, brown, FINE GRAVEL, some coarse sand, trace fine sand, trace silt.
	45	S12	44 to 46	24/4	10-12-11-12			S12: Wet, medium dense, brown, COARSE SAND, some fine gravel, some fine sand, trace silt.
	50	S13	49 to 51	24/5	9-15-13-13			S13: Wet, medium dense, brown, FINE TO MEDIUM GRAVEL, some coarse sand, some fine sand, trace silt.
								Bottom of boring at depth 51 ft. Boring backfilled with soil cuttings upon completion.

160 155 150 145 140 135 130 125 120 115 110 105

NOTES:

PROJECT NAME: Cochituate Rail Trail over Route 9
CITY/STATE: Natick, MA
GEI PROJECT NUMBER: 1701690
GEI Consultants

GEI WOBURN STD 1-LOCATION-LAYER NAME: 1701690 - CRT OVER ROUTE 9.GPJ 5/18/17

BORING BB-4
SCALE: $\frac{1}{4}$" = 1'-0"

BORING NOTES:

1. SEE NOTES ON SHEET 3.

DATE	DESCRIPTION
SEPT. 8, 2018	ISSUED FOR CONSTRUCTION
USE ONLY PRINTS OF LATEST DATE	

607732_BR4(N03014).DWG Plotted on 20-Aug-2018 4:31 PM
Final Structural Submittal (SF) 08-September-2018

NATICK
COCHITUATE RAIL TRAIL

STATE	FED. AID PROJ. NO.	SHEET NO.	TOTAL SHEETS
MA	STP(TE)/TAP/CMQ-0035(206)	157	253
PROJECT FILE NO. 607732			

PROBES

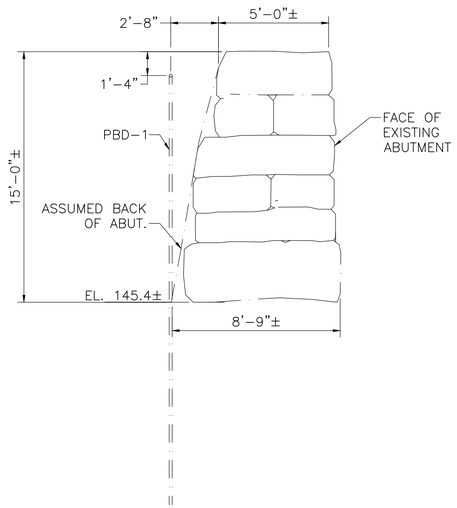

NORTHEAST PROBES

SCALE: $\frac{1}{4}$" = 1'-0"

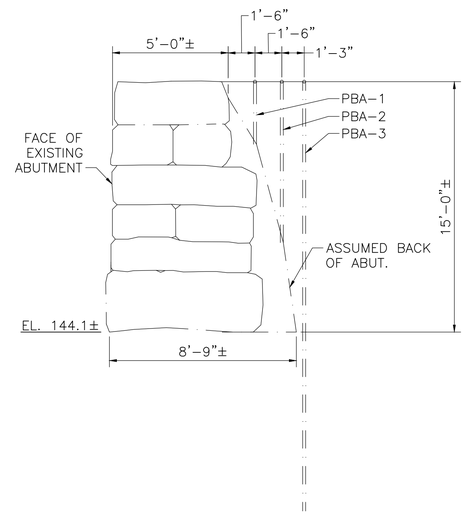

SOUTHEAST PROBES

SCALE: $\frac{1}{4}$" = 1'-0"

PROBE NOTES:

1. LOCATION OF PROBES ARE SHOWN ON THE PLAN THUS: ⊠
2. PROBES WERE TAKEN BEHIND EACH ABUTMENT TO DETERMINE THEIR APPROXIMATE GEOMETRY AND DEPTH. AS A RESULT, THE ABUTMENTS ARE ASSUMED TO HAVE A THICKNESS OF 5'-0" AT THE TOP AND TAPER OUT TO 8'-9" ± AT THE BASE. THE OVERALL HEIGHT IS APPROXIMATELY 15'-0".
3. ALL PROBES WERE MADE IN JANUARY 2014.
4. PROBES WERE MADE BY GEO LOGIC – EARTH EXPLORATION, INC., NORFOLK, MA 02056.
5. THE NORTH AMERICAN VERTICAL DATUM (NAVD) OF 1988 IS USED THROUGHOUT.

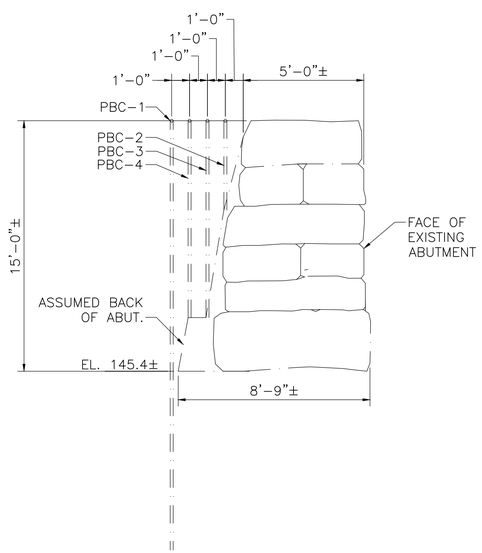

NORTHWEST PROBES

SCALE: $\frac{1}{4}$" = 1'-0"

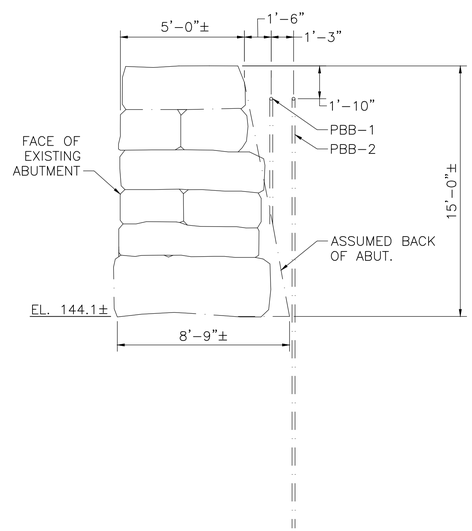

SOUTHWEST PROBES

SCALE: $\frac{1}{4}$" = 1'-0"

PROBE SUMMARY LOG

PROBE NUMBER	COORDINATES	ELEVATION	DEPTH	DISTANCE FROM FACE OF ABUT.	REFUSAL OR REQUIRED DEPTH
PBA-1	N2933948.1, E691891.5	159.1'	4'	1'-6"	REFUSAL
PBA-2	N2933946.7, E691892.1	159.1'	9'	3'-0"	REFUSAL
PBA-3	N2933945.7, E691892.4	159.1'	24'	4'-3"	REQUIRED
PBB-1	N2933941.8, E691870.9	157.3'	7'	1'-6"	REFUSAL
PBB-2	N2933940.5, E691871.2	157.3'	24'	2'-9"	REQUIRED
PBC-1	N2934006.6, E691796.1	160.4'	5'	1'-0"	REFUSAL
PBC-2	N2934007.5, E691795.8	160.4'	11'	2'-0"	REFUSAL
PBC-3	N2934008.5, E691795.3	160.4'	11'	3'-0"	REFUSAL
PBC-4	N2934009.4, E691794.9	160.4'	24'	4'-0"	REQUIRED
PBD-1	N2934013.0, E691817.1	159.1'	24'	2'-8"	REQUIRED

DATE	DESCRIPTION
SEPT. 8, 2018	ISSUED FOR CONSTRUCTION
USE ONLY PRINTS OF LATEST DATE	

607732_BR5(N03014).DWG Plotted on 20-Aug-2018 4:38 PM
Final Structural Submittal (SF) 08-September-2018

NATICK
COCHITUATE RAIL TRAIL

STATE	FED. AID PROJ. NO.	SHEET NO.	TOTAL SHEETS
MA	STP(TE)/TAP/CMQ-0035(206)	158	253
PROJECT FILE NO. 607732			

GENERAL PLAN & ELEVATION

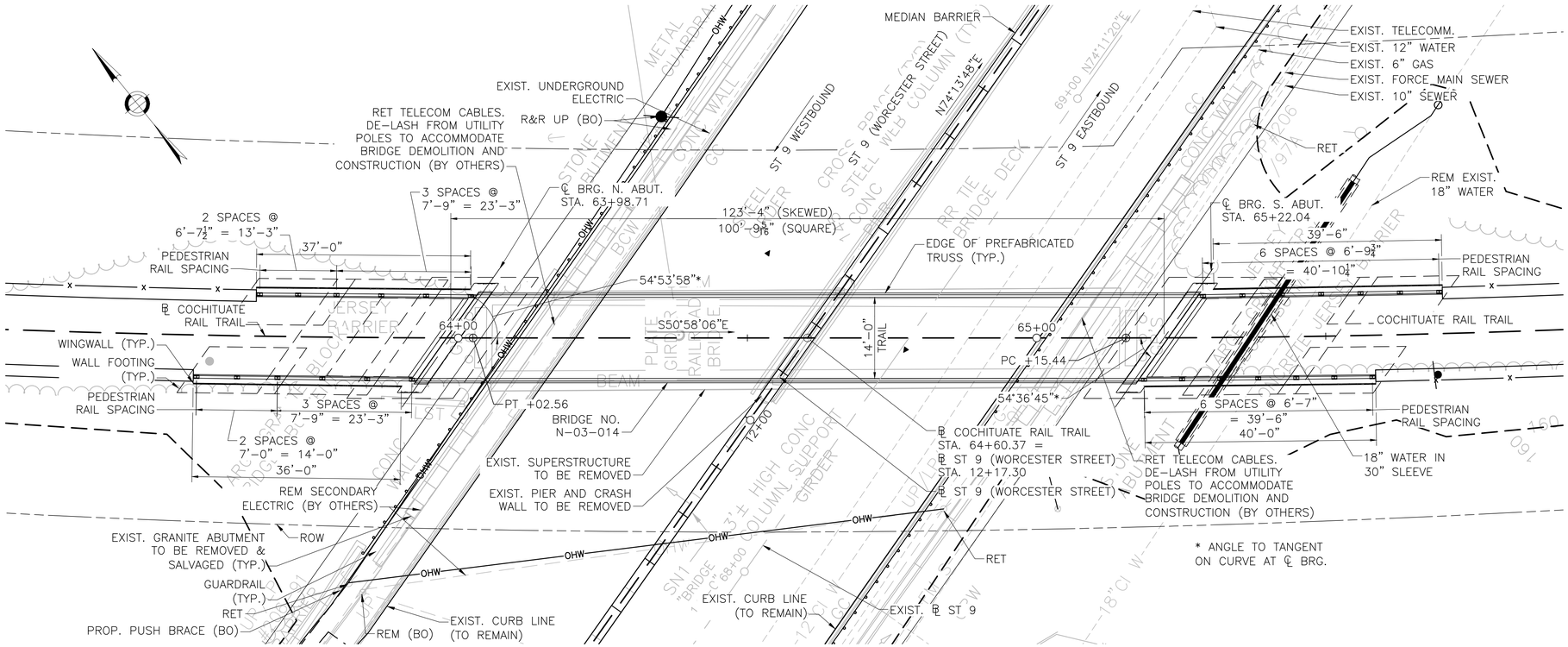

GENERAL PLAN

SCALE: 3/32" = 1'-0"

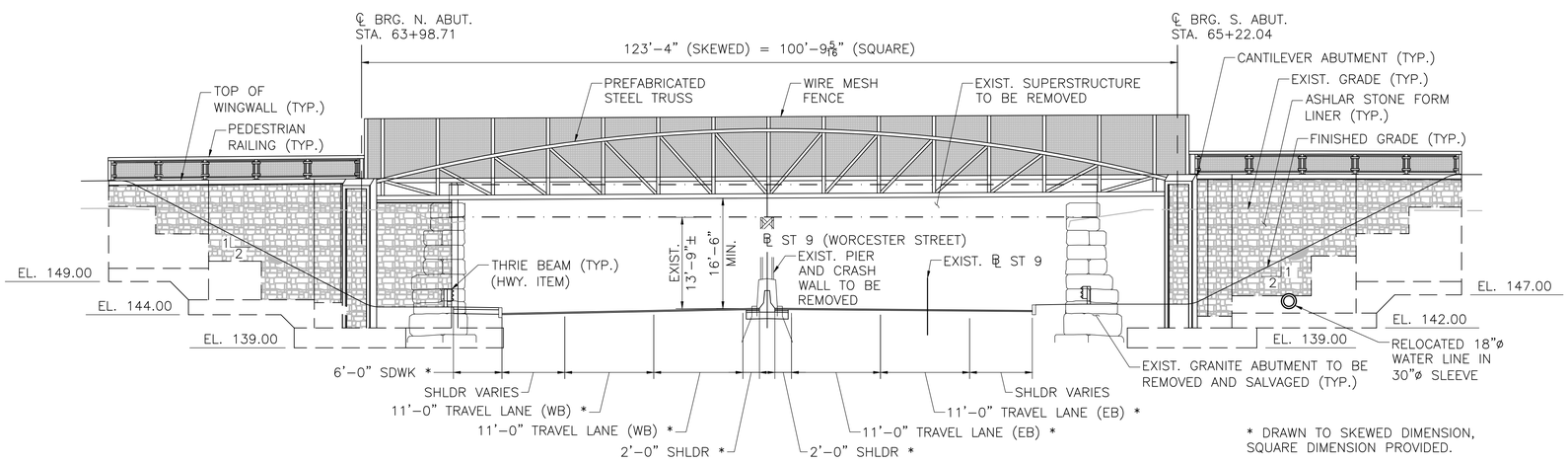

ELEVATION

SCALE: 3/32" = 1'-0"

SEPT. 8, 2018	ISSUED FOR CONSTRUCTION
DATE	DESCRIPTION
USE ONLY PRINTS OF LATEST DATE	

607732_BRG(N03014).DWG Plotted on 20-Aug-2018 4:31 PM
Final Structural Submittal (SF) 08-September-2018

NATICK
COCHITUATE RAIL TRAIL

STATE	FED. AID PROJ. NO.	SHEET NO.	TOTAL SHEETS
MA	STP(TE)/TAP/CMQ-0035(206)	159	253
PROJECT FILE NO. 607732			

BRIDGE DEMOLITION

DEMOLITION NOTES:

1. INDICATES AREA TO BE REMOVED AND DISPOSED.
2. THESE DRAWINGS ARE ONLY CONCEPTUAL. ACTUAL CONFIGURATION MAY VARY.

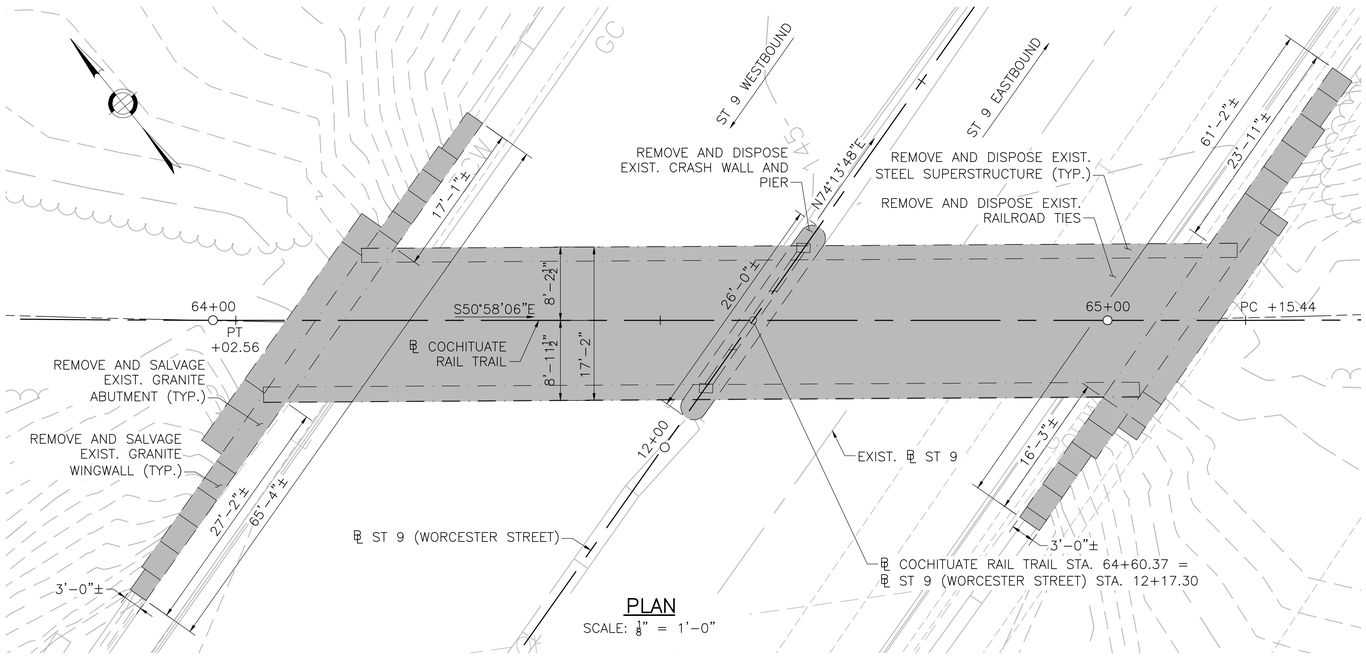

PLAN

SCALE: ⅛" = 1'-0"

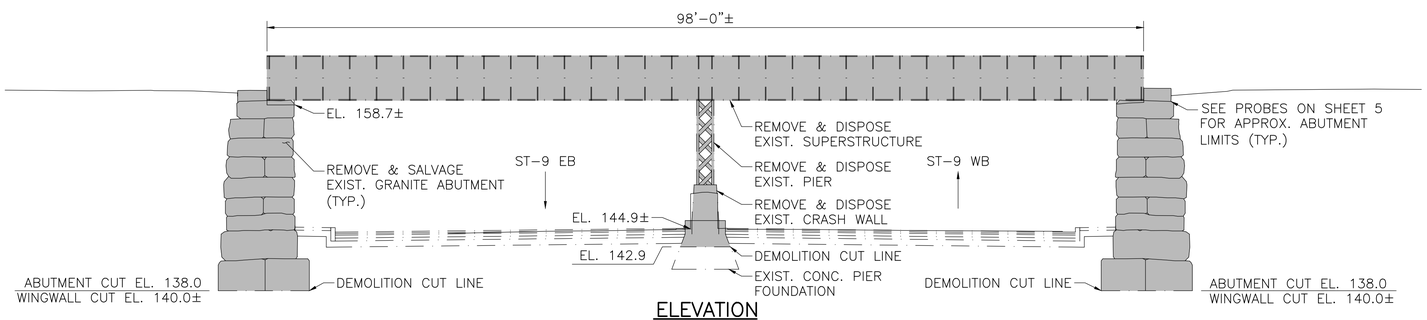

ELEVATION

SCALE: ⅛" = 1'-0"

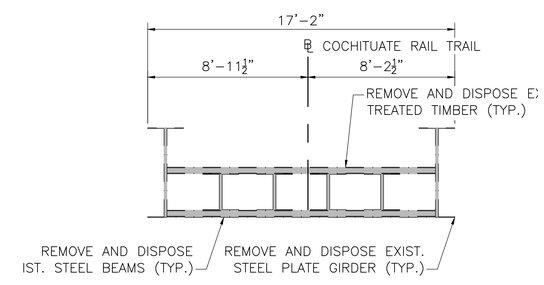

CROSS SECTION

SCALE: ¼" = 1'-0"

DATE	DESCRIPTION
SEPT. 8, 2018	ISSUED FOR CONSTRUCTION
USE ONLY PRINTS OF LATEST DATE	

607732_BR7(N03014).DWG Plotted on 20-Aug-2018 4:32 PM
Final Structural Submittal (SF) 08-September-2018

NATICK
COCHITUATE RAIL TRAIL

STATE	FED. AID PROJ. NO.	SHEET NO.	TOTAL SHEETS
MA	STP(TE)/TAP/CMQ-0035(206)	160	253
PROJECT FILE NO. 607732			

NORTH ABUTMENT PLAN & ELEVATIONS

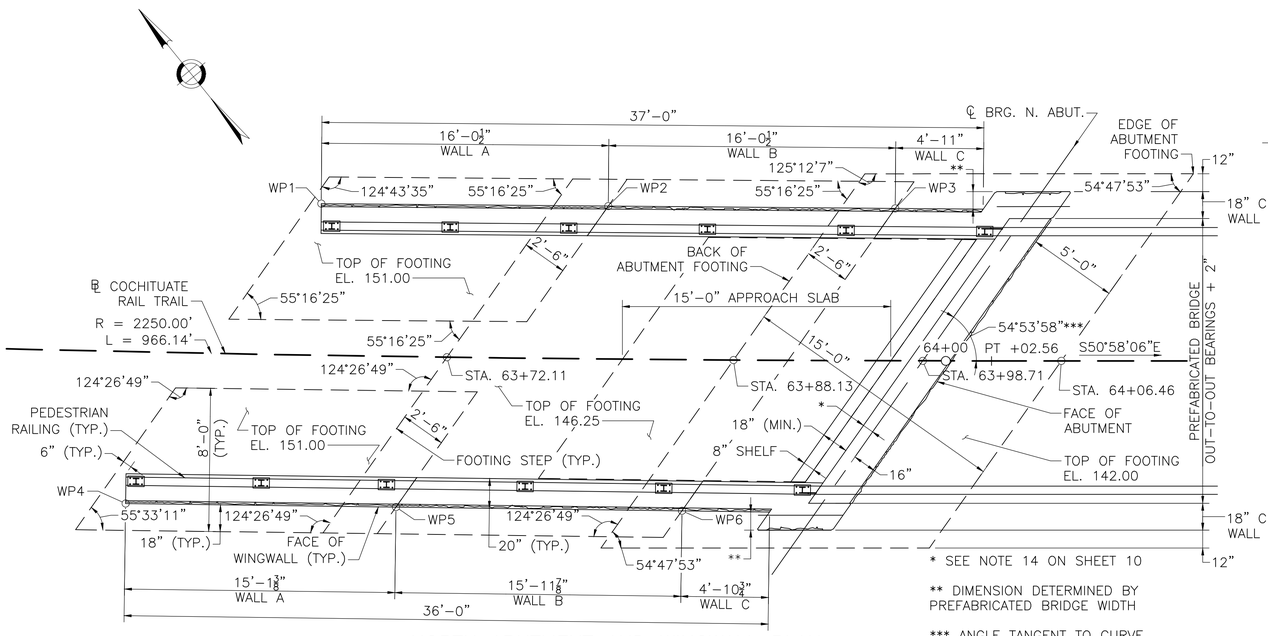

* SEE NOTE 14 ON SHEET 10

** DIMENSION DETERMINED BY PREFABRICATED BRIDGE WIDTH

*** ANGLE TANGENT TO CURVE AT ℄ BRG.

NORTH ABUTMENT AND WINGWALL PLAN

SCALE: ¼" = 1'-0"

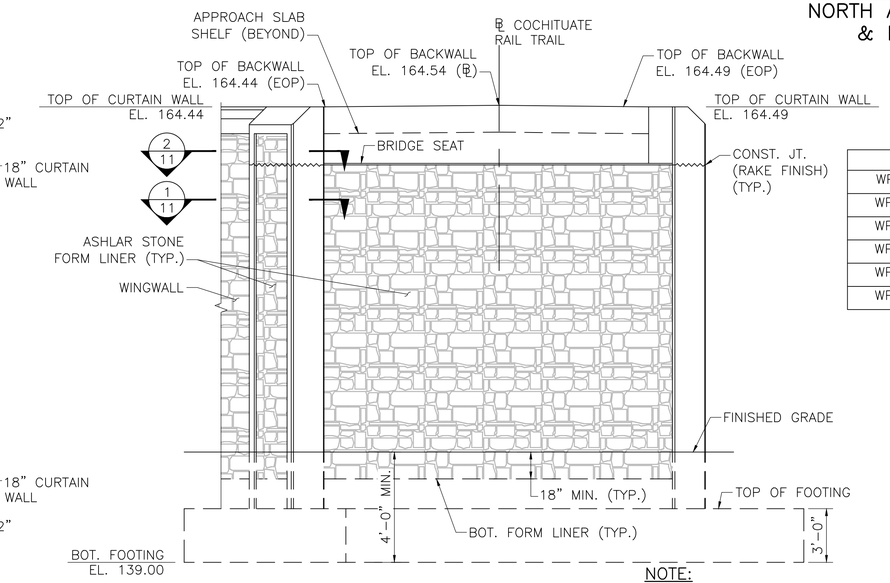

	STATION	OFFSET
WP1	63+64.95	8'-5¾" LT
WP2	63+81.05	8'-6⅝" LT
WP3	63+97.15	8'-6¼" LT
WP4	63+54.33	8'-5⅞" RT
WP5	63+69.39	8'-4⅞" RT
WP6	63+85.32	8'-5¼" RT

NORTH ABUTMENT ELEVATION

SCALE: ¼" = 1'-0"

NOTE:
BACKWALL ELEVATIONS PROVIDED AT FRONT FACE OF BACKWALL.

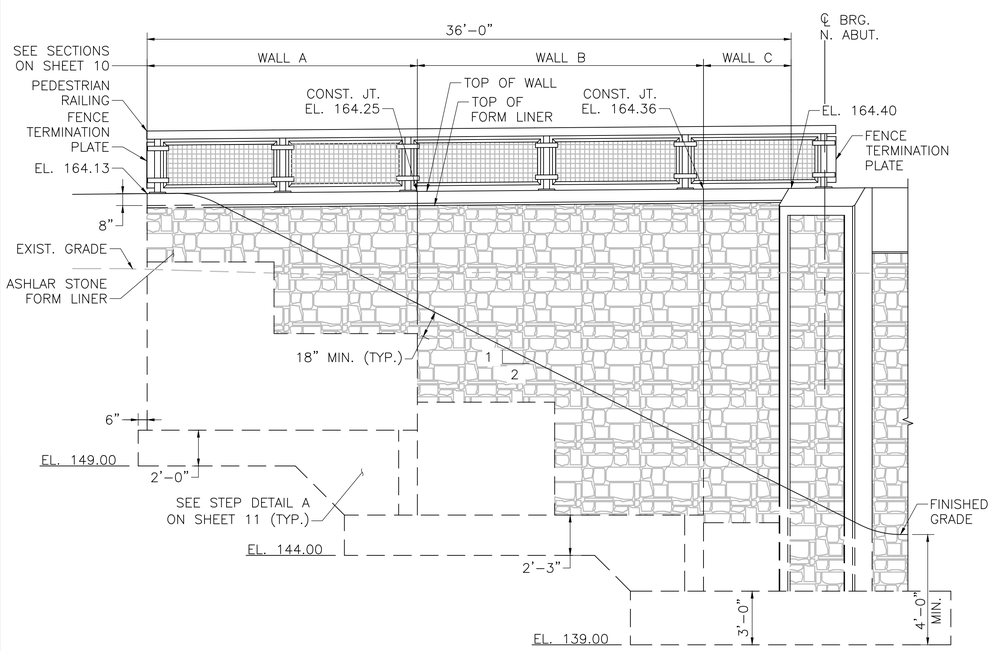

NW WINGWALL ELEVATION

SCALE: ¼" = 1'-0"

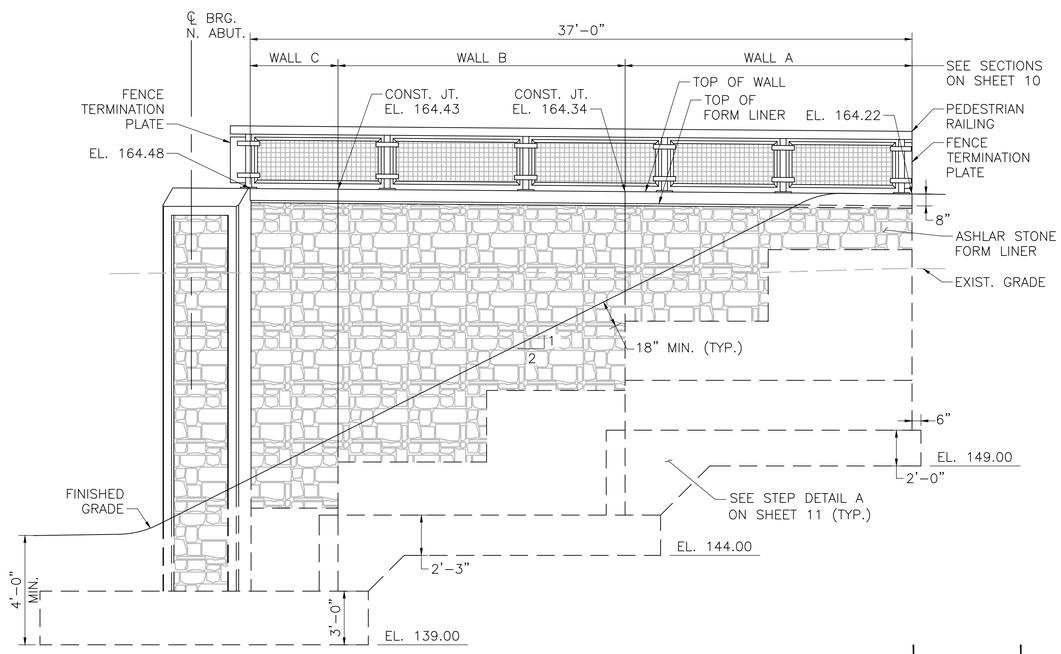

NE WINGWALL ELEVATION

SCALE: ¼" = 1'-0"

DATE	DESCRIPTION
SEPT. 8, 2018	ISSUED FOR CONSTRUCTION
USE ONLY PRINTS OF LATEST DATE	

607732_BRG(N03014).DWG Plotted on 20-Aug-2018 4:45 PM
Final Structural Submittal (SF) 08-September-2018

NATICK
COCHITUATE RAIL TRAIL

STATE	FED. AID PROJ. NO.	SHEET NO.	TOTAL SHEETS
MA	STP(TE)/TAP/CMQ-003S(206)	161	253
PROJECT FILE NO. 607732			

SOUTH ABUTMENT PLAN & ELEVATIONS

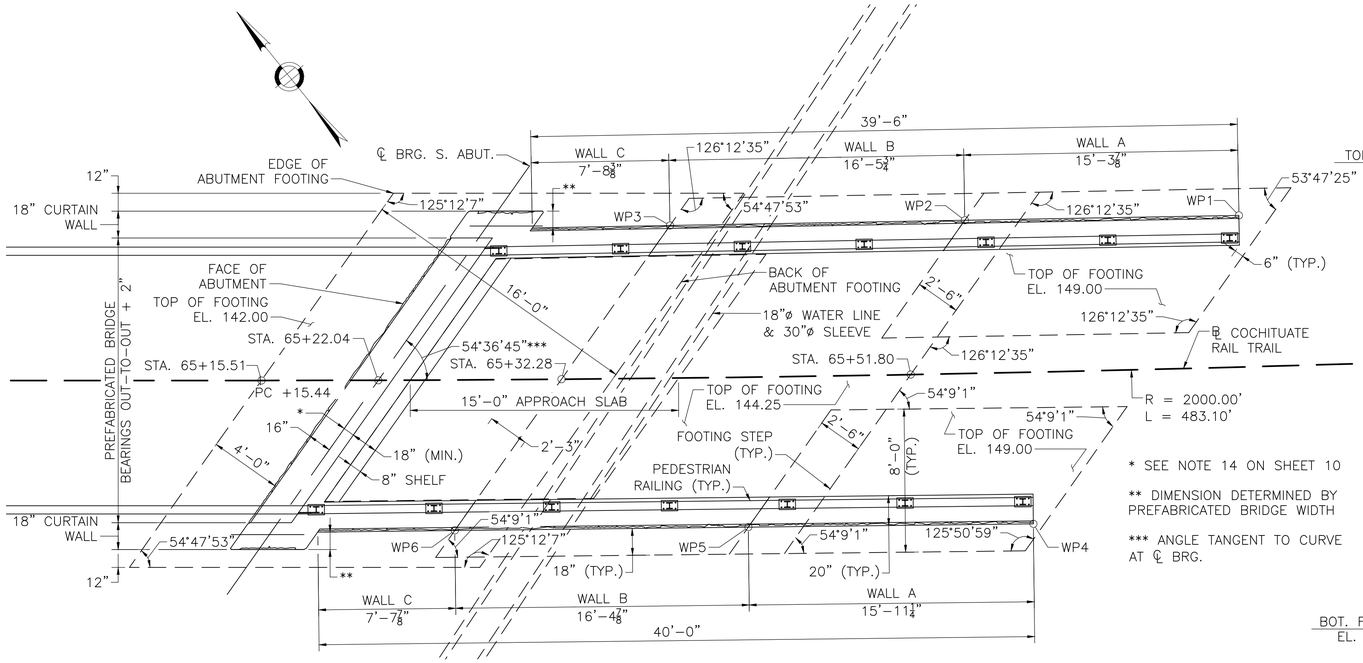

* SEE NOTE 14 ON SHEET 10

** DIMENSION DETERMINED BY PREFABRICATED BRIDGE WIDTH

*** ANGLE TANGENT TO CURVE AT ℄ BRG.

SOUTH ABUTMENT AND WINGWALL PLAN

SCALE: 1/4" = 1'-0"

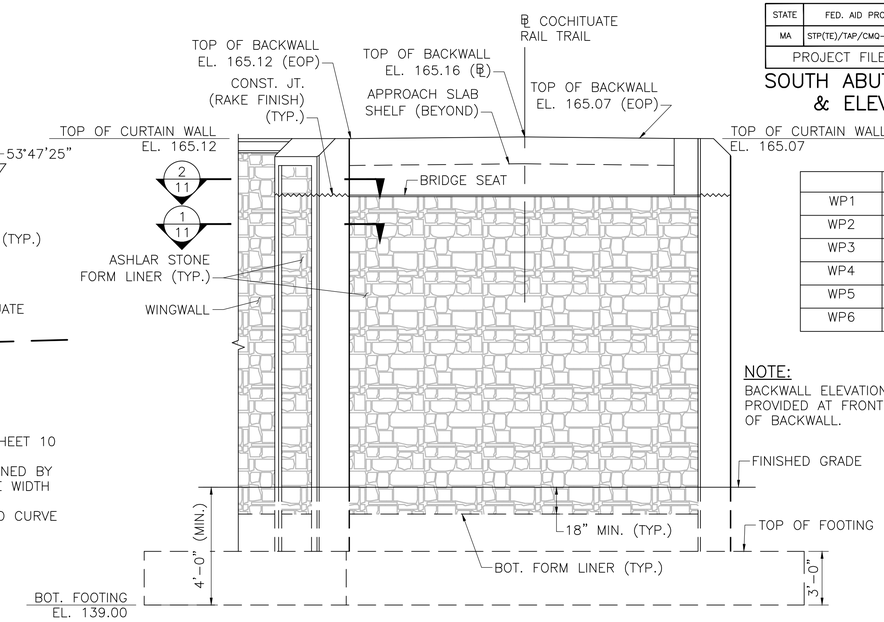

	STATION	OFFSET
WP1	65+70.39	8'-5 3/4" LT
WP2	65+55.00	8'-6 7/8" LT
WP3	65+38.44	8'-6 3/8" LT
WP4	65+58.48	8'-5 3/4" RT
WP5	65+42.61	8'-4 1/2" RT
WP6	65+26.27	8'-4 7/8" RT

NOTE:
BACKWALL ELEVATIONS PROVIDED AT FRONT FACE OF BACKWALL.

SOUTH ABUTMENT ELEVATION

SCALE: 1/4" = 1'-0"

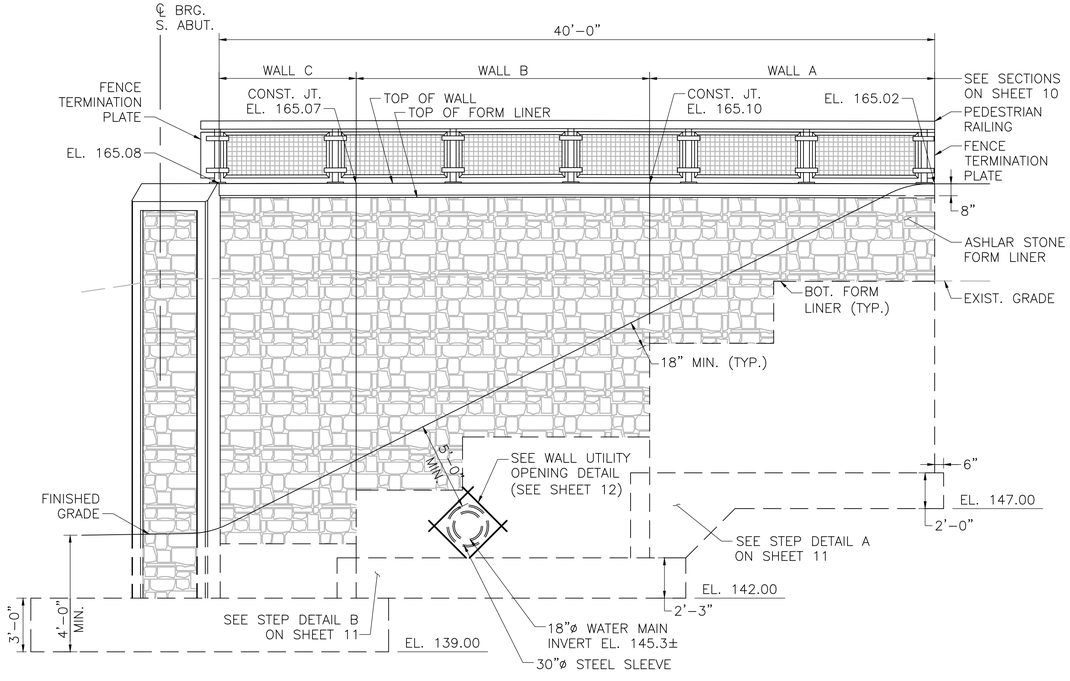

SW WINGWALL ELEVATION

SCALE: 1/4" = 1'-0"

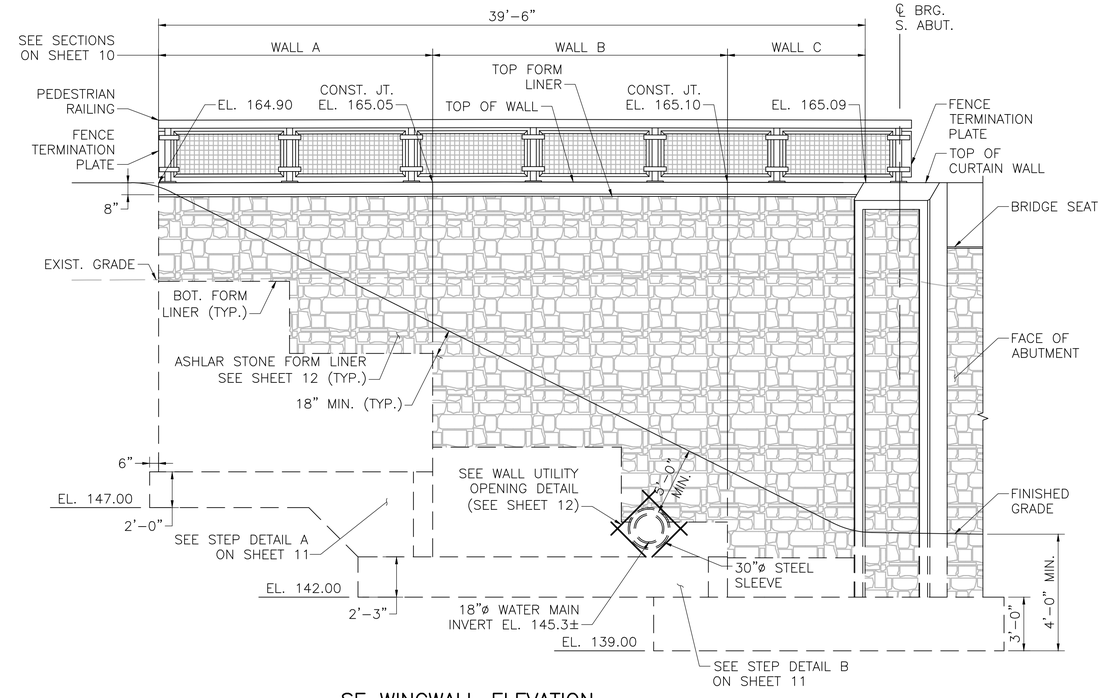

SE WINGWALL ELEVATION

SCALE: 1/4" = 1'-0"

SEPT. 8, 2018	ISSUED FOR CONSTRUCTION
DATE	DESCRIPTION
USE ONLY PRINTS OF LATEST DATE	

607732_BRG(N03014).DWG Plotted on 20-Aug-2018 4:43 PM
Final Structural Submittal (SF) 08-September-2018

NATICK
COCHITUATE RAIL TRAIL

STATE	FED. AID PROJ. NO.	SHEET NO.	TOTAL SHEETS
MA	STP(TE)/TAP/CMQ-0035(206)	162	253
PROJECT FILE NO. 607732			

ABUTMENT & WINGWALL SECTIONS

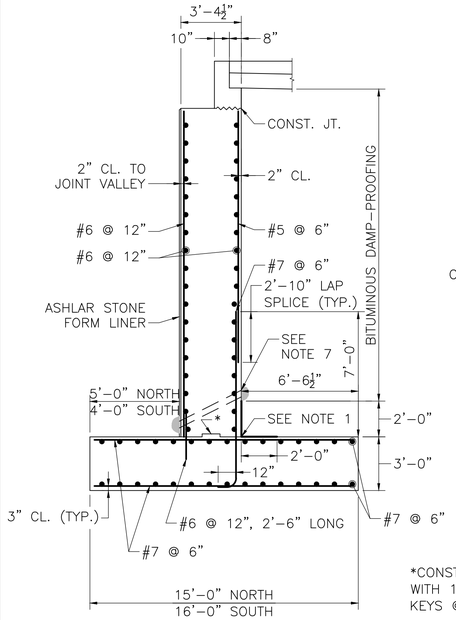

*CONSTRUCTION JOINT WITH 12"x12"x2" SHEAR KEYS @ 3'-0" O.C.

TYPICAL ABUTMENT SECTION

SCALE: ¼" = 1'-0"

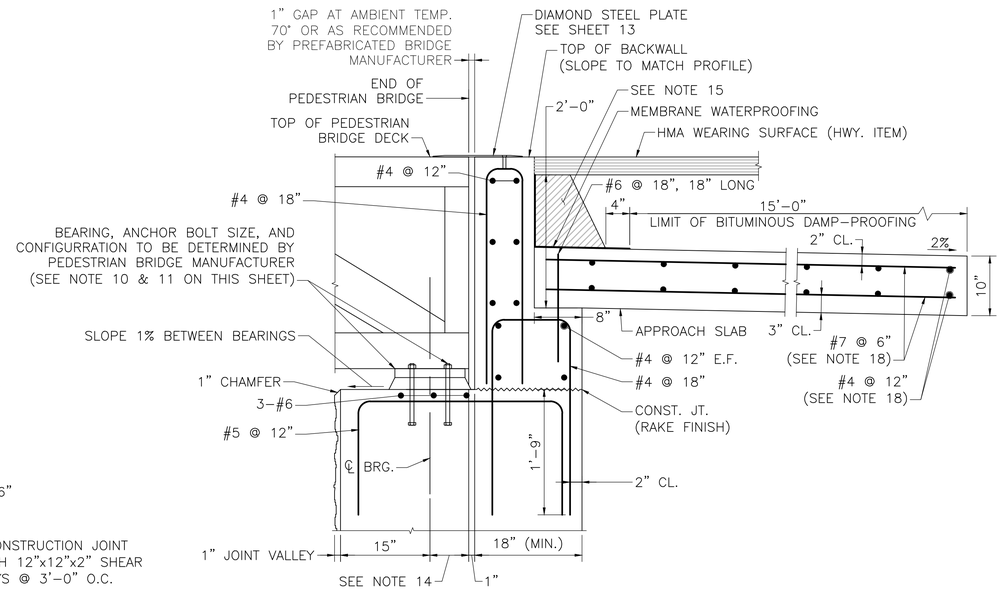

ABUTMENT DETAIL

SCALE: 1" = 1'-0"

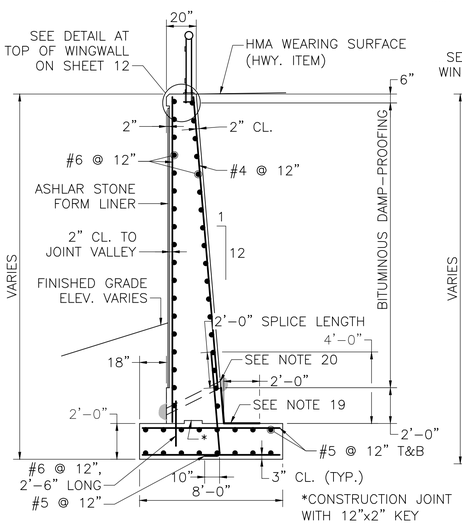

*CONSTRUCTION JOINT WITH 12"x2" KEY

WALL A

SCALE: ¼" = 1'-0"

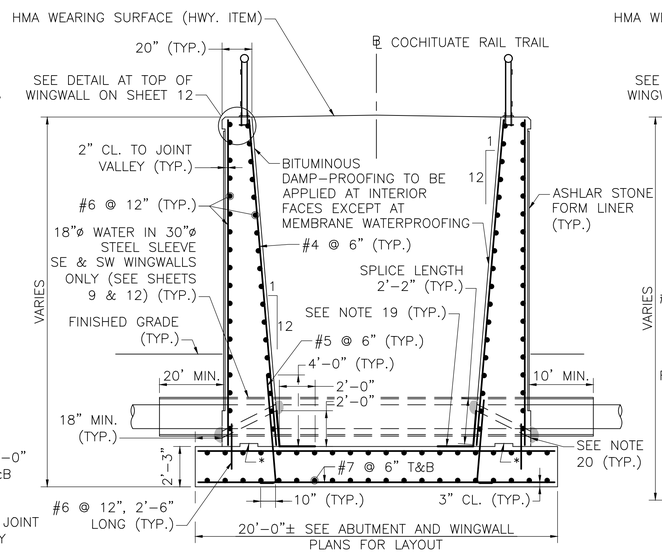

*CONSTRUCTION JOINT WITH 12"x2" KEY

WALL B

SCALE: ¼" = 1'-0"

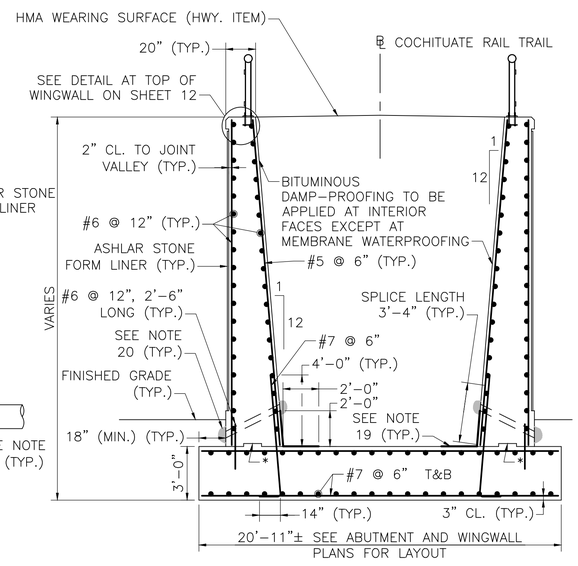

*CONSTRUCTION JOINT WITH 12"x2" KEY

WALL C

SCALE: ¼" = 1'-0"

ABUTMENT NOTES

1. MEMBRANE WATERPROOFING AND 8"x16"x2", 4000 PSI, ¾ IN., 610 CEMENT CONCRETE BLOCKS LAID IN MORTAR OR OTHER WATERPROOFING PROTECTIVE COURSE, MIN. 2" THICK AS SPECIFIED IN MHD STANDARD SPECIFICATIONS.
2. ALL REINFORCEMENT SHOWN IN THIS DETAIL SHALL BE COATED EXCEPT FOR THE APPROACH SLAB REINFORCEMENT.
3. ALL CONCRETE SHALL BE 4000 PSI, 1½ IN., 565 CEMENT CONCRETE EXCEPT THE BACKWALL, CURTAIN WALL.
4. ALL BACKWALL AND CURTAIN WALL CONCRETE ABOVE THE CONSTRUCTION JOINT LOCATED AT THE BRIDGE SEAT SHALL BE 4000 PSI, ¾ IN., 610 CEMENT CONCRETE. THE CONSTRUCTION JOINT SHALL BE GIVEN A RAKE FINISH WITH A ¼" MINIMUM AMPLITUDE.
5. TOP OF BACKWALL SHALL BE TROWELED SMOOTH PARALLEL TO THE PROFILE GRADE.
6. THE BACKWALL CONCRETE MUST BE PLACED AND SUFFICIENTLY CURED PRIOR TO PLACING THE CURTAIN WALL AND WINGWALL.
7. PROVIDE 4"ø WEEP HOLES AT 10'-0" O.C. JUST ABOVE PROTECTIVE COURSE AND PROVIDE 1 C.Y. OF CRUSHED STONE AT EACH END OF WEEP HOLE.
8. CONTRACTOR TO COORDINATE HEIGHT OF BACKWALL AND ELEVATION OF BRIDGE SEAT WITH PREFABRICATED BRIDGE MANUFACTURER, PRIOR TO CONSTRUCTION.
9. ANCHOR BOLTS, NUTS, AND WASHERS SHALL CONFORM TO ASTM F 1554 GRADE 105 AND SHALL BE HOT-DIPPED GALVANIZED IN ACCORDANCE WITH AASHTO M 232.
10. CONTRACTOR TO COORDINATE SIZE, CONFIGURATION OF BEARING ASSEMBLY AND ANCHORAGE WITH PREFABRICATED BRIDGE MANUFACTURER. BEARING ASSEMBLY AND ANCHORAGE MUST BE SUBMITTED TO THE ENGINEER FOR APPROVAL PRIOR TO INSTALLATION.
11. BEARING ASSEMBLY TO BE DESIGNED IN ACCORDANCE WITH THE 2014 AMERICAN ASSOCIATION OF STATE HIGHWAY AND TRANSPORTATION OFFICIALS LRFD BRIDGE DESIGN SPECIFICATIONS WITH CURRENT INTERIM SPECIFICATIONS THROUGH 2017.
12. BACKWALL WILL BE DETERMINED BY THE WIDTH OF BEAM SEAT BUT NOT LESS THAN 18". COORDINATE WITH PREFABRICATED BRIDGE MANUFACTURER.
13. TOTAL BEAM SEAT WIDTH SHALL BE EQUAL TO PREFABRICATED BRIDGE OUT-TO-OUT WIDTH +2". CONTRACTOR TO COORDINATE OUT-TO-OUT WIDTH WITH PREFABRICATED BRIDGE MANUFACTURER.
14. CONTRACTOR TO COORDINATE LENGTH OF PREFABRICATED BRIDGE BEHIND BEARING CENTERLINE WITH MANUFACTURER PRIOR TO CONSTRUCTION.
15. PROTECTIVE COURSE TO BE SUPERPAVE BRIDGE PROTECTIVE COARSE (SPC-B-12.5), PLACED IN 2" LAYERS AND COMPACTED WITH A MECHANICAL HAND-GUIDED TAMPER WITHIN 12 HOURS AFTER PLACING MEMBRANE WATERPROOFING.
16. THE NORTH ABUTMENT FACTORED BEARING PRESSURE = 4.50 KSF AND THE SOUTH ABUTMENT = 4.48 AS PER AASHTO LRFD BRIDGE DESIGN SPECIFICATIONS STRENGTH I LOAD COMBINATION.

    FACTORED BEARING RESISTANCE = 11.6 KSF. FACTORED BEARING RESISTANCE IS THE PRODUCT OF THE NOMINAL BEARING RESISTANCE AND A RESISTANCE FACTOR OF 0.45.

APPROACH SLAB NOTES:

17. APPROACH SLAB TO BE 4000 PSI, 1½ IN., 565 CEMENT CONCRETE.
18. PLACE LONGITUDINAL REINFORCEMENT PARALLEL TO THE CENTERLINE OF CONSTRUCTION. PLACE TRANSVERSE REINFORCEMENT PARALLEL TO ABUTMENT.

CANTILEVER WINGWALL NOTES:

19. MEMBRANE WATERPROOFING AND 8"x16"x2", 4000 PSI, ¾ IN., 610 CEMENT CONCRETE BLOCKS LAID IN MORTAR OR OTHER WATERPROOFING PROTECTIVE COURSE, MIN. 2" THICK AS SPECIFIED IN MHD STANDARD SPECIFICATIONS.
20. 4" ø WEEP HOLES 10'-0" O.C. (JUST ABOVE PROTECTIVE COURSE). PROVIDE 1 CUBIC YARD OF CRUSHED STONE AT EACH END OF THE WEEP HOLE.
21. ALL CONCRETE SHALL BE 4000 PSI, 1½ IN., 565 CEMENT CONCRETE.
22. WINGWALL A FACTORED BEARING PRESSURE = 6.02 KSF, WINGWALL B FACTORED BEARING PRESSURE = 2.73 KSF, AND WINGWALL C FACTORED BEARING PRESSURE = 3.49 KSF AS PER AASHTO LRFD BRIDGE DESIGN SPECIFICATIONS STRENGTH I LOAD COMBINATION.

    WINGWALL A FACTORED BEARING RESISTANCE = 6.92 KSF. WINGWALL B FACTORED BEARING RESISTANCE = 10.74 KSF, AND WINGWALL C FACTORED BEARING RESISTANCE = 10.93 KSF. FACTORED BEARING RESISTANCE IS THE PRODUCT OF THE NOMINAL BEARING RESISTANCE AND A RESISTANCE FACTOR OF 0.55.

DATE	DESCRIPTION
SEPT. 8, 2018	ISSUED FOR CONSTRUCTION
USE ONLY PRINTS OF LATEST DATE	

607732_BR10N03014).DWG Plotted on 20-Aug-2018 4:43 PM
Final Structural Submittal (SF) 06-September-2018

NATICK
COCHITUATE RAIL TRAIL

STATE	FED. AID PROJ. NO.	SHEET NO.	TOTAL SHEETS
MA	STP(TE)/TAP/CMQ-0035(206)	163	253
PROJECT FILE NO. 607732			

SUBSTRUCTURE DETAILS (1 OF 2)

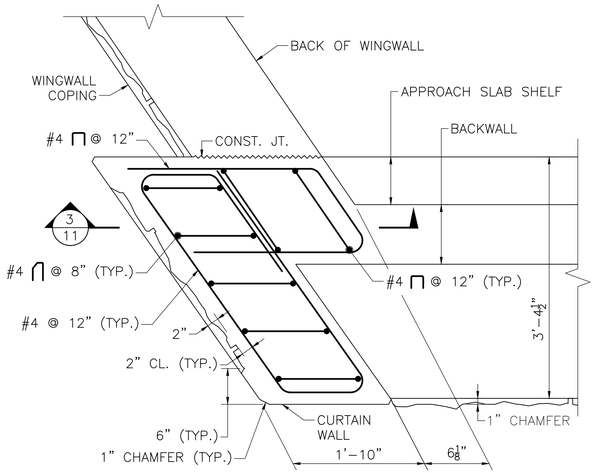

SECTION 1
SCALE: 1" = 1'-0"

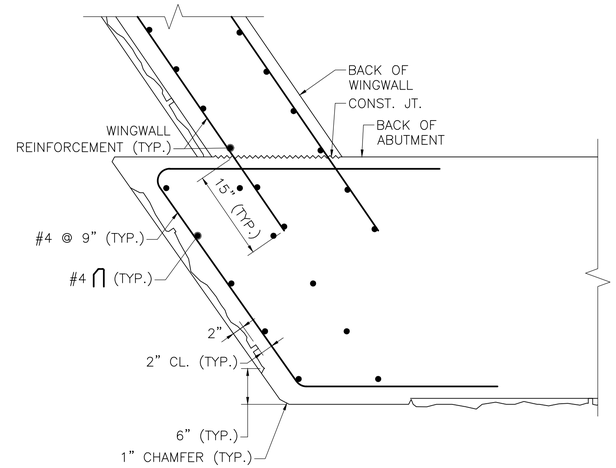

SECTION 2
SCALE: 1" = 1'-0"

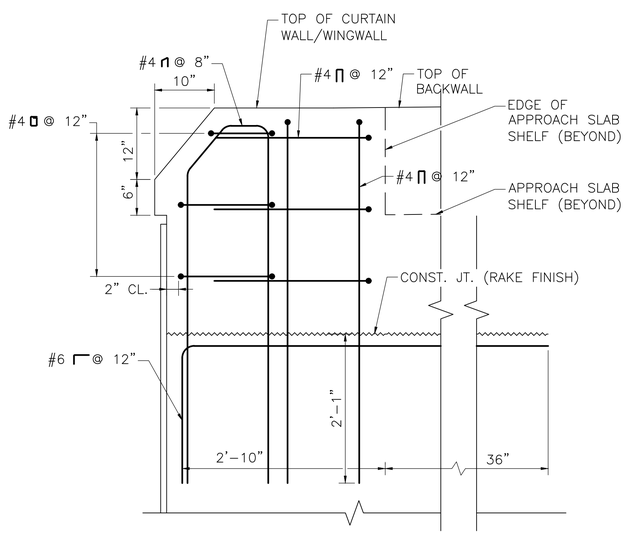

SECTION 3
SCALE: 1" = 1'-0"

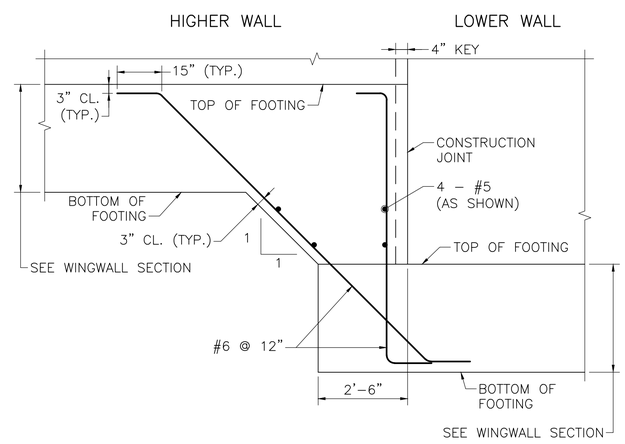

DETAIL A – STEPPED-UP FOOTING
SCALE: ½" = 1'-0"

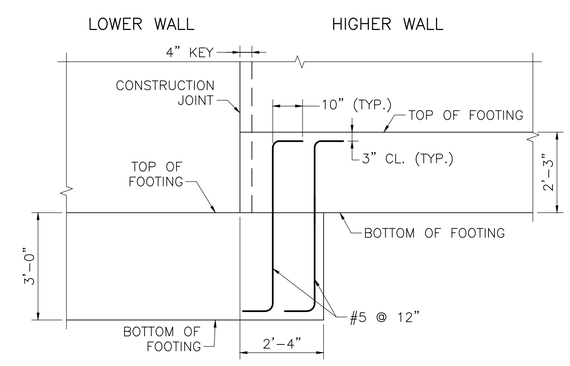

DETAIL B – STEPPED-UP FOOTING
SCALE: ½" = 1'-0"

SEPT. 8, 2018	ISSUED FOR CONSTRUCTION
DATE	DESCRIPTION
USE ONLY PRINTS OF LATEST DATE	

607732_BR11(N03014).DWG Plotted on 20-Aug-2018 4:43 PM
Final Structural Submittal (SF) 08-September-2018

NATICK
COCHITUATE RAIL TRAIL

STATE	FED. AID PROJ. NO.	SHEET NO.	TOTAL SHEETS
MA	STP(TE)/TAP/CMQ-0035(206)	164	253
PROJECT FILE NO. 607732			

SUBSTRUCTURE DETAILS (2 OF 2)

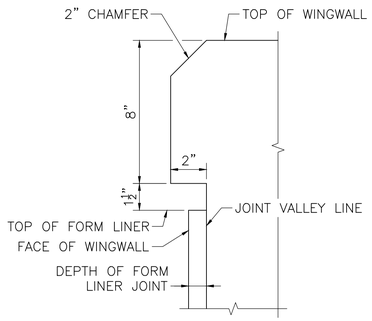

DETAIL AT TOP OF WINGWALL
SCALE: 3" = 1'-0"

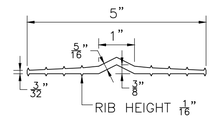

5" WATERSTOP DETAIL
NOT TO SCALE

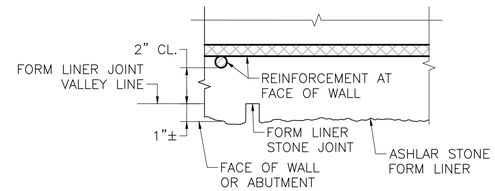

TYPICAL FORM LINER DETAIL
SCALE: 3" = 1'-0"

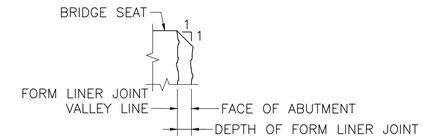

DETAIL AT BRIDGE SEAT
SCALE: 3" = 1'-0"

FORM LINER NOTES:

1. THE CONTRACTOR SHALL MAKE SURE THAT THE FORM LINERS ARE PLUMB AND LINED UP VERTICALLY FROM PANEL TO PANEL FOR THE FULL HEIGHT OF THE WALL.

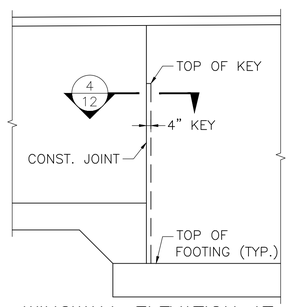

WINGWALL ELEVATION AT CONSTRUCTION JOINT
SCALE: 3/16" = 1'-0"

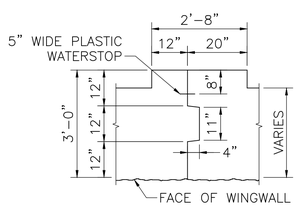

SECTION 4
SCALE: 1/2" = 1'-0"

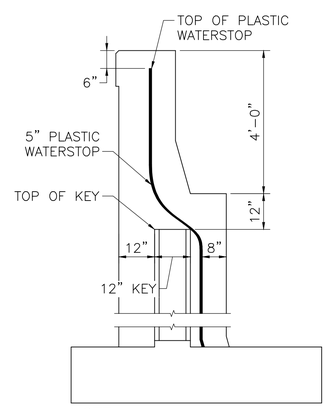

NOTE:
REINFORCEMENT SHALL BE CONTINUOUS THROUGH CONSTRUCTION JOINTS.

CANTILEVER WINGWALL

VERTICAL SECTION THROUGH CONSTRUCTION JOINT
SCALE: 1/2" = 1'-0"

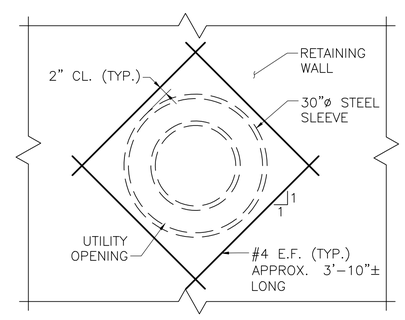

WALL UTILITY OPENING DETAIL
SCALE: 3/4" = 1'-0"

SEPT. 8, 2018	ISSUED FOR CONSTRUCTION
DATE	DESCRIPTION
USE ONLY PRINTS OF LATEST DATE	

607732_BR12(N03014).DWG Plotted on 20-Aug-2018 4:42 PM
Final Structural Submittal (SF) 08-September-2018

NATICK
COCHITUATE RAIL TRAIL

STATE	FED. AID PROJ. NO.	SHEET NO.	TOTAL SHEETS
MA	STP(TE)/TAP/CMQ-0035(206)	165	253
PROJECT FILE NO. 607732			

TRANSVERSE SECTION & MISCELLANEOUS DETAILS

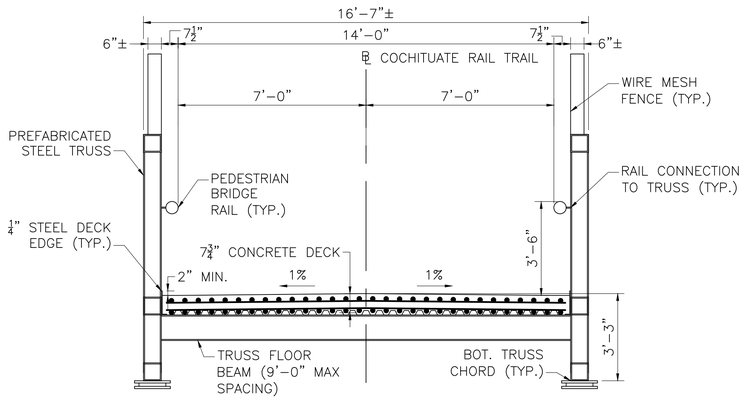

NOTE:

CROSS-SECTION IS FOR CONCEPTUAL PURPOSES ONLY. ACTUAL CROSS-SECTION WILL VARY FROM MANUFACTURER

TRANSVERSE SECTION

SCALE: ⅜" = 1'-0"

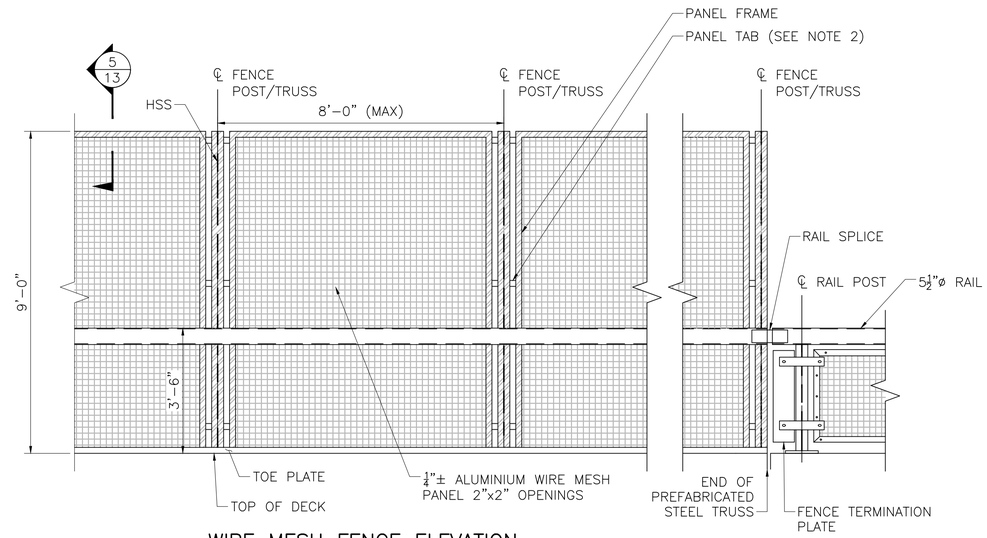

WIRE MESH FENCE ELEVATION

SCALE: ½" = 1'-0"

PREFABRICATED BRIDGE NOTES:

1. DECK SLABS SHALL BE 4000 PSI ¾ IN., 585 HP CEMENT CONCRETE.
2. MESH PANEL: FENCE MANUFACTURER TO PROVIDE ¼ IN. DIAMETER WIRE WITH 2" SQUARE MESH. PANEL SHALL BE SURROUNDED IN U-CHANNEL ALUMINIUM FRAME. PROVIDE DRAINAGE HOLES IN BOTTOM CHANNEL FRAME. FENCE SHOWN AS CONCEPTUAL DESIGN ONLY. FENCE DESIGN, DETAILING, AND CONNECTION TO TRUSS VERTICAL MEMBERS SHALL BE DESIGNED BY BRIDGE MANUFACTURER.
3. OVERALL WIDTH AND DEPTH OF PREFABRICATED PEDESTRIAN BRIDGE TO BE COORDINATED WITH BRIDGE MANUFACTURER PRIOR TO CONSTRUCTION OF ABUTMENT BEAMSEAT AND BACKWALL.
4. DEPTH OF SUPERSTRUCTURE TO BE COORDINATED WITH BRIDGE MANUFACTURER PRIOR TO BEAM SEAT CONSTRUCTION, DEPTH OF SUPERSTRUCTURE + BEARING ASSEMBLY = 2'-8" MAX. 1 3'-3" 1
5. BRIDGE SELECTION SHALL BE SUBMITTED TO THE ENGINEER FOR APPROVAL.
6. PREFABRICATED BRIDGE TO BE DESIGNED IN ACCORDANCE WITH THE 2009 AASHTO LRFD GUIDE SPECIFICATIONS FOR THE DESIGN OF PEDESTRIAN BRIDGES.
7. ALL REINFORCEMENT AND SUPPORT DEVICES SHALL BE EPOXY COATED.
8. DELIVERY AND INSTALLATION OF PREFABRICATED PEDESTRIAN BRIDGE AND BEARING ASSEMBLY SHALL BE PER MANUFACTURERS RECOMMENDATION.
9. ALL STRUCTURAL STEEL OTHER THAN STRUCTURAL TUBING SHALL BE AASHTO M270 GRADE 50. STRUCTURAL TUBING SHALL BE ASTM A1085 GRADE A, MINIMUM STRUCTURAL TUBULAR MEMBER THICKNESS SHALL BE ¼".
10. ALL EXPOSED STEEL SURFACES SHALL BE FINISHED AND FREE OF COARSE OR RUGGED EDGES. WELDED TUBULAR CONNECTIONS SHALL BE DESIGNED IN ACCORDANCE WITH THE STRUCTURAL WELDING CODE – STEEL ANSI/AWS/D1.1. SEE SPECIAL PROVISIONS FOR ADDITIONAL REQUIREMENTS.
11. ALL NON TUBULAR WELDED CONNECTIONS SHALL BE DESIGNED IN ACORDANCE WITH THE AASHTO/AWS D1.5 BRIDGE WELDING CODE. SEE SPECIAL PROVISIONS FOR ADDITIONAL REQUIREMENTS.
12. ALL STRUCTURAL STEEL AND STRUCTURAL TUBING SHALL BE GALVANIZED AND PAINTED DARK BRONZE (FEDERAL STD. 595B COLOR NO. 10045).
13. ALL HARDWARE, ALUMINUM COMPONENTS, AND FABRIC SHALL RECEIVE A 4±1 MIL POLYESTER POWDER COAT FINISH. THE COLOR SHALL MATCH THE COLOR OF THE RAILING.
14. THE MAXIMUM UNFACTORED PREFABRICATED BRIDGE DEAD LOAD PER ABUTMENT IS 116.0 KIPS, INCLUDING TRUSS, DECK, FENCE, AND ALL OTHER MISCELLANEOUS COMPONENTS.

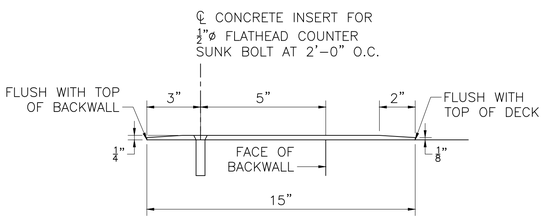

DIAMOND STEEL PLATE DETAIL

NOT TO SCALE

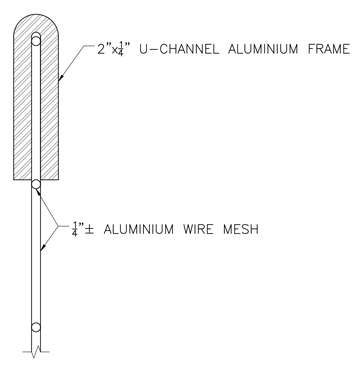

SECTION 5

SCALE: 1'-0" = 1'-0"

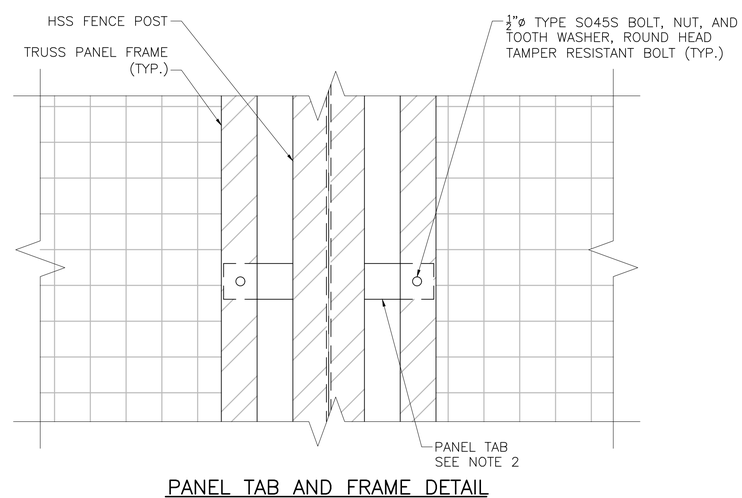

PANEL TAB AND FRAME DETAIL

SCALE: 3" = 1'-0"

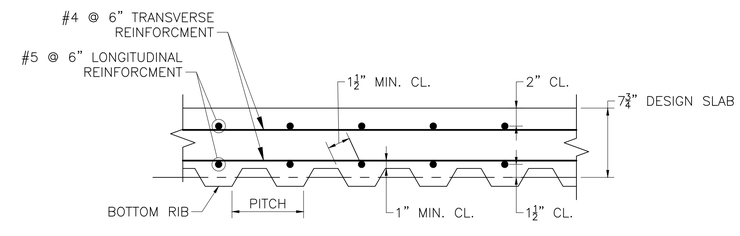

TYPICAL DECK SECTION

NOT TO SCALE

DATE	DESCRIPTION
NOV. 16, 2018	1 ADDENDUM 2 NOTE 4 REVISED
SEPT. 8, 2018	ISSUED FOR CONSTRUCTION
USE ONLY PRINTS OF LATEST DATE	

607732_BR13(N03014).DWG Plotted on 15-Nov-2018 9:25 AM
Final Structural Submittal (SF) 08-September-2018

NATICK
COCHITUATE RAIL TRAIL

STATE	FED. AID PROJ. NO.	SHEET NO.	TOTAL SHEETS
MA	STP(TE)/TAP/CMQ-003S(206)	166	253
PROJECT FILE NO. 607732			

PEDESTRIAN RAIL DETAILS

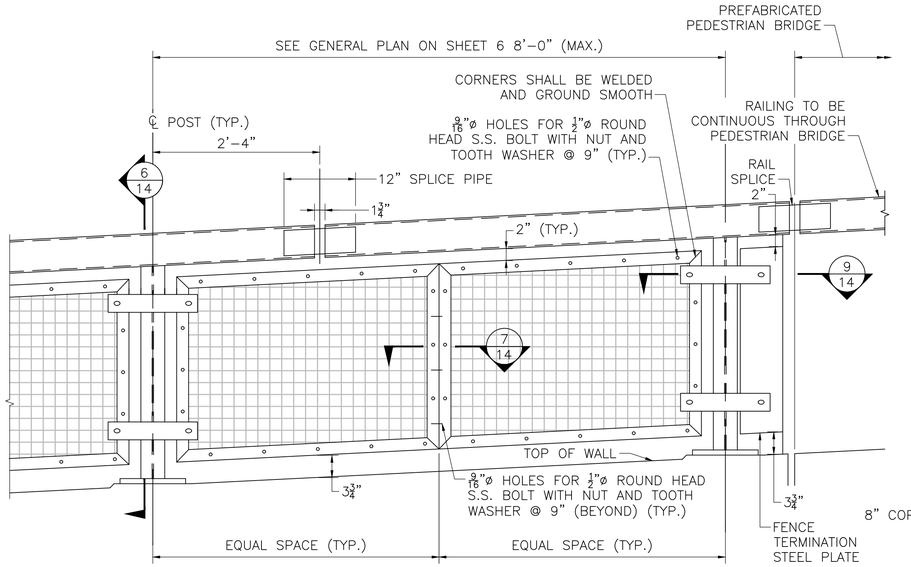

BRIDGE RAILING ELEVATION (BACK SIDE)
SCALE: 1" = 1'-0"

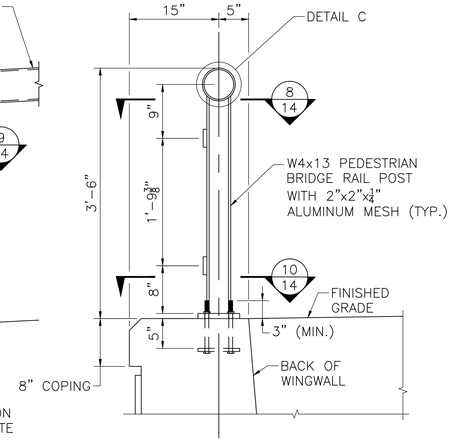

SECTION 6
SCALE: 1" = 1'-0"

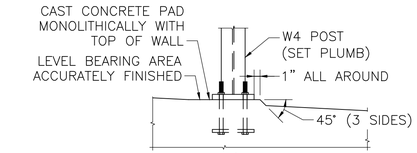

SETTING OF POSTS (PROFILE GRADE OVER 1.5%)
SCALE: 1" = 1'-0"

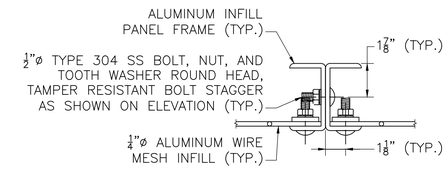

SECTION 7
SCALE: 3" = 1'-0"

NOTES:

1. RAIL POST AND BASE PLATES SHALL CONFORM TO THE REQUIREMENTS OF AASHTO M 270 GRADE 50. PIPE RAILING AND PIPE SPLICE SHALL CONFORM TO THE REQUIREMENTS OF ASTM A 53 WITH A CERTIFIED Fy = 35 KSI MINIMUM. PLATES SHALL CONFORM TO THE REQUIREMENTS OF AASHTO M 270 GRADE 36.
2. ALL STEEL SHAPES AND PLATES SHALL BE GALVANIZED AND PAINTED DARK BRONZE (FEDERAL STANDARD 595B COLOR NO. 10045).
3. ALL HARDWARE, ALUMINUM COMPONENTS, AND FABRIC SHALL RECEIVE A 4±1 MIL POLYESTER POWDER COAT FINISH. THE COLOR SHALL MATCH THE COLOR OF THE RAILING.
4. HEADS OF EXPOSED BOLTS SHALL BE PAINTED DARK BRONZE.
5. ANCHOR BOLTS SHALL BE SET WITH TEMPLATES. THE NUT SECURING THE POST BASE PLATE TO THE CONCRETE SHALL BE TIGHTENED TO A SNUG FIT AND GIVEN AN ADDITIONAL 1/8 TURN AFTER STEEL IS IN PLACE.
6. RAILINGS SHALL BE CONTINUOUS OVER A MINIMUM OF FOUR (4) POSTS WITHOUT SPLICES WITHOUT SPLICES WHERE POSSIBLE.
7. ENDS OF RAILING SECTIONS SHALL BE SAWED. GRIND SMOOTH EXPOSED EDGES. ALL CUT ENDS SHALL BE TRUE AND SMOOTH.
8. ALL POSTS TO BE PLUMB WHEN PROFILE GRADE EXCEEDS 1.5%. FOR PROFILE GRADES LESS THAN 1.5%, POSTS SHALL BE SET PERPENDICULAR TO GRADE.
9. POST WELDS DO NOT REQUIRE MAGNETIC PARTICLE TESTING.
10. ALUMINUM: PROVIDE ALLOY AND TEMPER RECOMMENDED BY ALUMINUM PRODUCER AND FINISHER FOR TYPE OF USE AND FINISH INDICATED, AND WITH NOT LESS THAN THE STRENGTH AND DURABILITY PROPERTIES OF THE ALLOY AND TEMPER DESIGNATED BELOW FOR EACH ALUMINUM FORM REQUIRED:

    10.a. EXTRUDED BARS AND TUBE: ASTM B 221, ALLOYS 6005-T5, 6061-T6 AND 6063-T6.

    10.b. PANEL CLIPS AND STRUCTURAL FASTENERS: ALLOY 6063-T6
11. MESH PANEL: RAILING MANUFACTURER TO PROVIDE 1/4 IN. DIAMETER WIRE WITH 2" SQUARE MESH. PANEL SHALL BE SURROUNDED IN U-CHANNEL ALUMINUM FRAME. PROVIDE DRAINAGE HOLES IN BOTTOM CHANNEL FRAME.
12. ALL ALUMINUM SHALL HAVE AN ANODIZED FINISH, CLASS I PROVIDED IN ACCORDANCE WITH AA-M12-C22-A41.

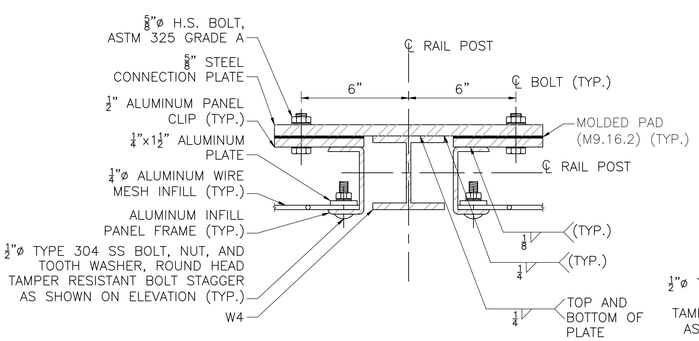

SECTION 8
SCALE: 3" = 1'-0"

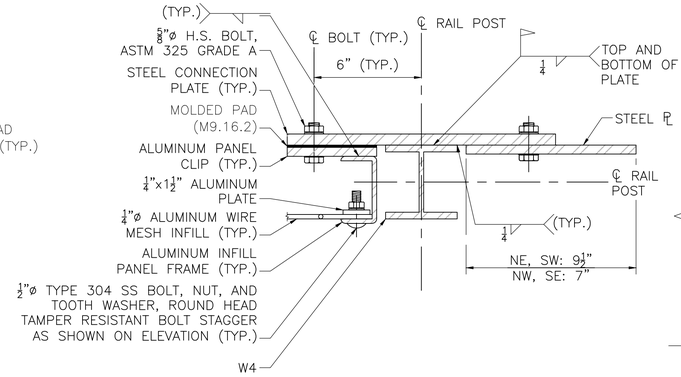

SECTION 9
SCALE: 3" = 1'-0"

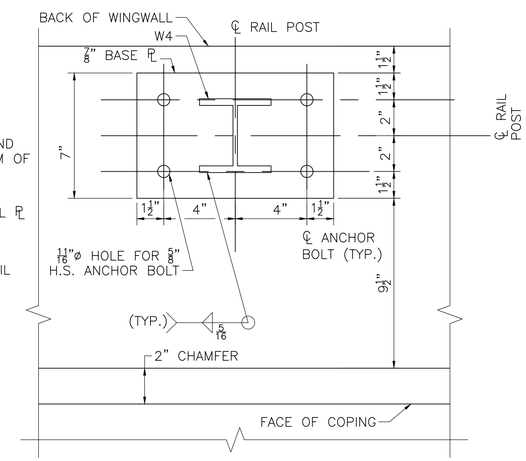

SECTION 10
SCALE: 3" = 1'-0"

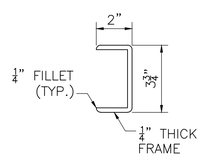

INFILL PANEL DETAIL
SCALE: 3" = 1'-0"

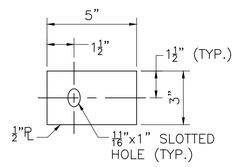

PANEL CLIP DETAIL
SCALE: 3" = 1'-0"

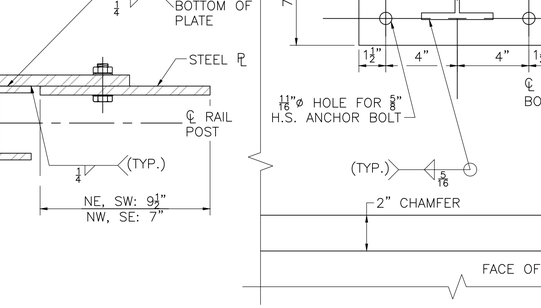

RAIL SPLICE
SCALE: 3" = 1'-0"

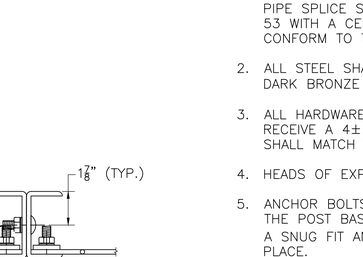

RAIL END
SCALE: 3" = 1'-0"

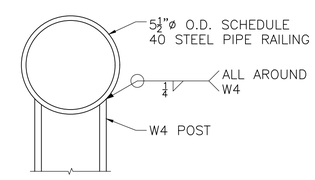

DETAIL C
SCALE: 3" = 1'-0"

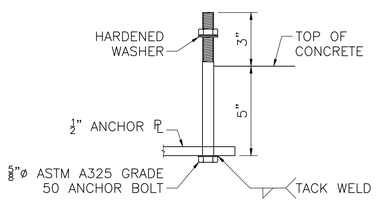

ANCHOR BOLT
SCALE: 3" = 1'-0"

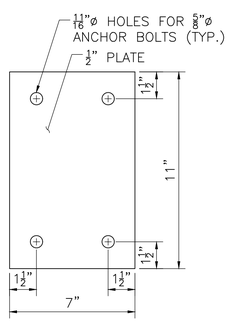

ANCHOR PLATE
SCALE: 3" = 1'-0"

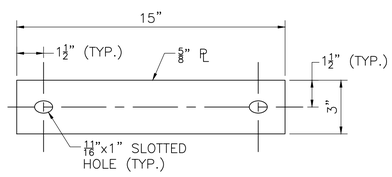

CONNECTION PLATE DETAIL
SCALE: 3" = 1'-0"

SEPT. 8, 2018	ISSUED FOR CONSTRUCTION
DATE	DESCRIPTION
USE ONLY PRINTS OF LATEST DATE	

607732_BR14(N03014).DWG Plotted on 20-Aug-2018 4:42 PM
Final Structural Submittal (SF) 08-September-2018

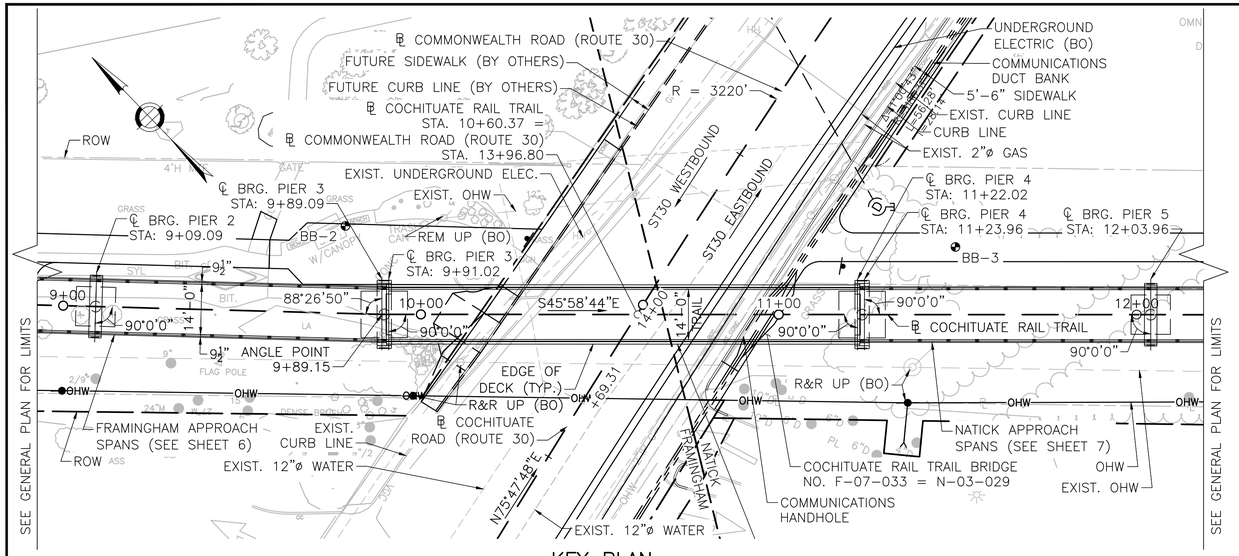

KEY PLAN

SCALE: 1" = 20'

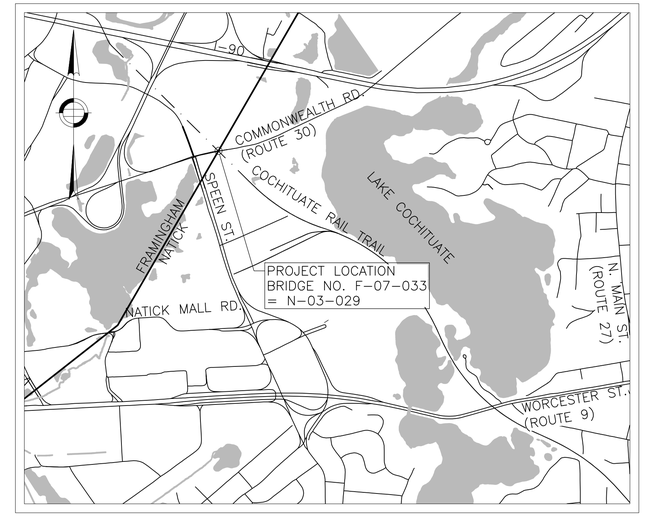

LOCUS PLAN

SCALE: 1" = 1000'

FRAMINGHAM/NATICK
COCHITUATE RAIL TRAIL

STATE	FED. AID PROJ. NO.	SHEET NO.	TOTAL SHEETS
MA	STP(TE)/TAP/CMQ-003S(206)	167	253
PROJECT FILE NO. 607732			

TITLE SHEET

SHEET INDEX:

TITLE SHEET	1
GENERAL NOTES AND ESTIMATED QUANTITIES	2
BORING LOGS (1 OF 2)	3
BORING LOGS (2 OF 2)	4
GENERAL PLAN AND ELEVATION	5
NORTH APPROACH GENERAL PLAN AND ELEVATION	6
SOUTH APPROACH GENERAL PLAN AND ELEVATION	7
ABUTMENT PLANS AND ELEVATIONS	8
PIER PLANS AND ELEVATIONS	9
ABUTMENT DETAILS (1 OF 2)	10
ABUTMENT DETAILS (2 OF 2)	11
SUBSTRUCTURE DETAILS	12
PIER DETAILS (1 OF 2)	13
PIER DETAILS (2 OF 2)	14
NORTH MSE WALL PLAN AND ELEVATION	15
SOUTH MSE WALL PLAN AND ELEVATION	16
MSE WALL AND MISCELLANEOUS DETAILS	17
NORTH APPROACH FRAMING PLAN	18
SOUTH APPROACH FRAMING PLAN	19
STEEL DETAILS	20
CAMBER	21
BEARING DETAILS	22
ABUTMENT END DIAPHRAGM	23
PIER END DIAPHRAGM	24
TRANSVERSE SECTION AND DECK DETAILS	25
TOP OF FORM ELEVATIONS AND DECK DETAILS	26
STRIP SEAL DETAILS	27
PEDESTRIAN RAIL DETAILS (1 OF 2)	28
PEDESTRIAN RAIL DETAILS (2 OF 2)	29

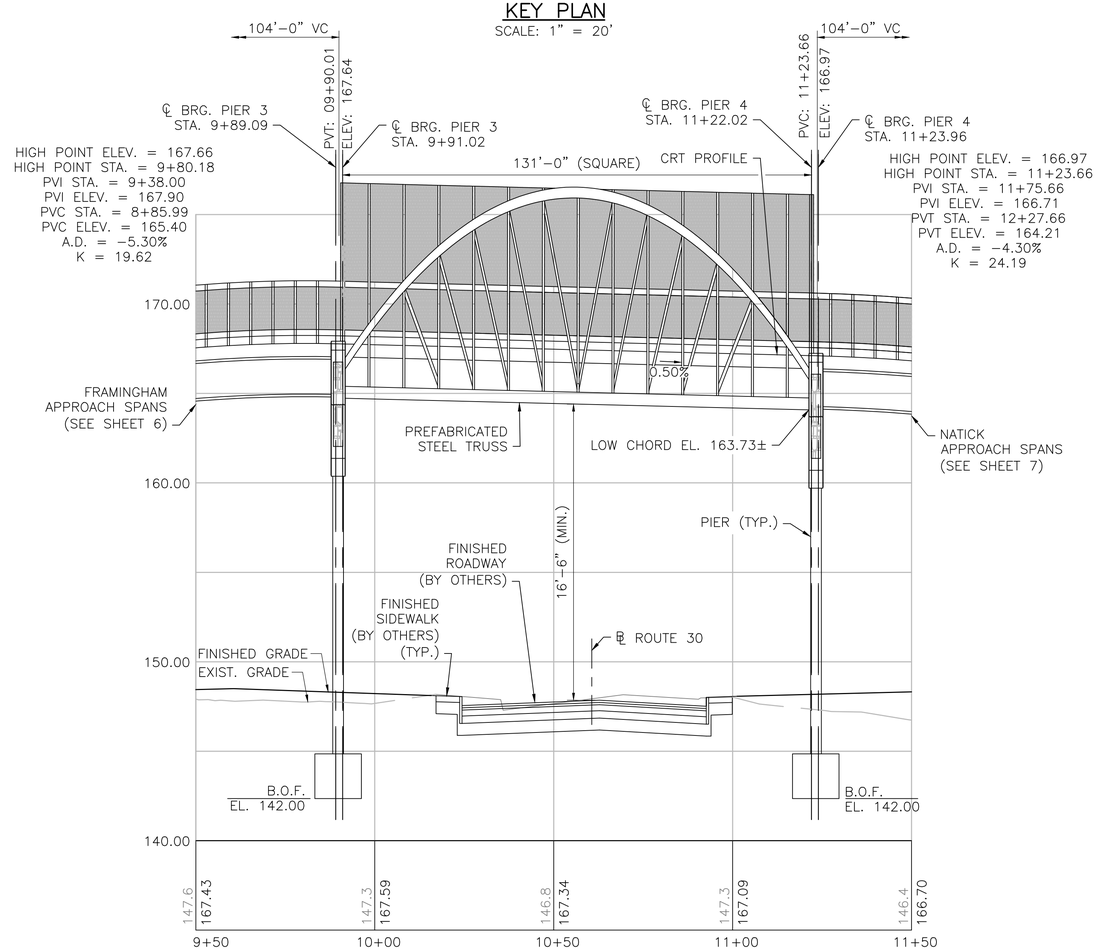

COCHITUATE RAIL TRAIL PROFILE

HORIZ. SCALE: 1" = 20'-0" ; VERT. SCALE: ¼"=1'-0'

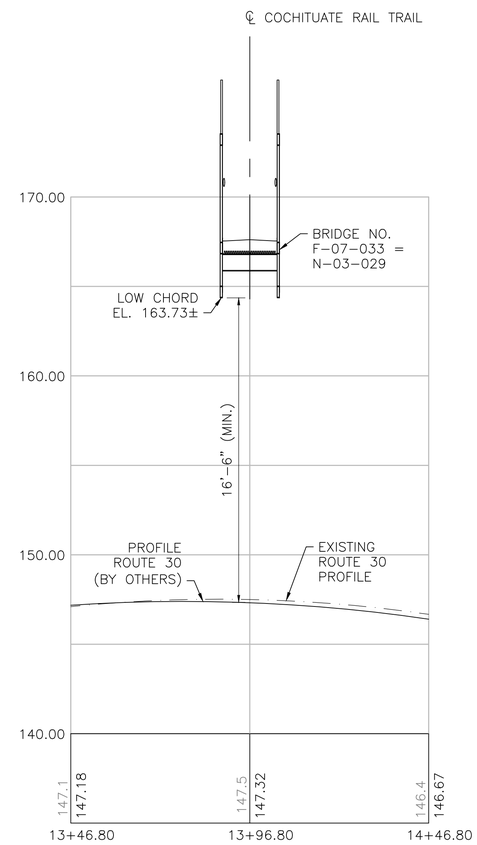

ST 30 (COMMONWEALTH ROAD)

HORIZ. SCALE: 1" = 20'-0" ; VERT. SCALE: ¼"=1'-0'

SEPT. 8, 2018	ISSUED FOR CONSTRUCTION

massDOT Massachusetts Department of Transportation Highway Division

PROPOSED BRIDGE

FRAMINGHAM/NATICK

COCHITUATE RAIL TRAIL
OVER ST 30 (COMMONWEALTH ROAD)

MASSACHUSETTS DEPARTMENT OF TRANSPORTATION
HIGHWAY DIVISION
10 PARK PLAZA BOSTON, MASS

BETA www.BETA-Inc.com

TITLE: CHIEF ENGINEER

*
BQX BR0

SHEET 1 OF 29 SHEETS BRIDGE NO. F-07-033 = N-03-029 (*)

607732_BR1(F07033).DWG Plotted on 20-Aug-2018 4:57 PM

Final Structural Submittal (SF) 08-September-2018

GENERAL NOTES:

DESIGN:

IN ACCORDANCE WITH THE 2009 LRFD GUIDE SPECIFICATIONS FOR THE DESIGN OF PEDESTRIAN BRIDGES WITH CURRENT 2015 INTERIM REVISIONS AND THE 2014 AMERICAN ASSOCIATION OF STATE HIGHWAY AND TRANSPORTATION OFFICIALS LRFD BRIDGE DESIGN SPECIFICATIONS WITH CURRENT INTERIM SPECIFICATIONS THROUGH 2017 FOR 90 PSF PEDESTRIAN/H10 LOADING, WHICHEVER CONTROLS.

MASSDOT BENCHMARK:

STATION 1	STATION 5291	STATION 100
MAGNAILFND	SPKFND	STKNLSET
N = 2937535.59	N = 2937517.59	N = 2937394.30
E = 688016.84	E = 687946.39	E = 688043.00

ELEVATIONS ARE BASED ON THE NORTH AMERICAN VERTICAL DATUM (NAVD) OF 1988.

MASSDOT SURVEY NOTEBOOKS:

AN INSTRUMENT FIELD SURVEY WAS PERFORMED BY SURVEYING AND MAPPING CONSULTANTS, BRAINTREE, MA. BETWEEN JULY AND SEPTEMBER, 2012.

THE COORDINATES, IN FEET, ARE BASED UPON THE NORTH AMERICAN VERTICAL DATUM OF 1988 (NAVD 88).

SCALES:

SCALES NOTED ON THE PLANS ARE NOT APPLICABLE TO REDUCED SIZE PRINTS. DIVIDE SCALES BY 2 FOR HALF-SIZE PRINTS (A3).

FOUNDATIONS:

FOUNDATIONS MAY BE ALTERED, IF NECESSARY, TO SUIT CONDITIONS ENCOUNTERED DURING CONSTRUCTION, WITH THE APPROVAL OF THE ENGINEER.

UNSUITABLE MATERIAL:

ALL UNSUITABLE MATERIAL SHALL BE REMOVED WITHIN THE LIMITS OF THE FOUNDATIONS OF THE STRUCTURE, AS DIRECTED BY THE ENGINEER.

SEISMIC GROUND SHAKING HAZARD:

DESIGN RETURN PERIOD: 2500 YEARS

DESIGN SPECTRA:
A_S = 0.141
S_{DS} = 0.237
S_{D1} = 0.134

SITE CLASS = D
SEISMIC DESIGN CATEGORY (SDC) = A

ANCHOR BOLTS:

ALL ANCHOR BOLTS SHALL BE SET BY TEMPLATE BEFORE CONCRETE IS PLACED.

REINFORCEMENT:

REINFORCING STEEL SHALL CONFORM TO THE REQUIREMENTS OF AASHTO M 31 GRADE 60. UNLESS OTHERWISE NOTED ON THE CONSTRUCTION DRAWINGS, ALL BARS SHALL BE LAPPED AS FOLLOWS:

MODIFICATION CONDITION:	#4 BARS	#5 BARS	#6 BARS	#7 BARS	#8 BARS
1. NONE	19"	24"	29"	33"	38"
2. 12" OF CONCRETE BELOW BAR	25"	31"	37"	43"	49"
3. COATED BARS, COVER <3db, OR CLEAR SPACING <6db	29"	36"	43"	50"	57"
4. COATED BARS, ALL OTHER CASES	23"	29"	34"	40"	45"
5. CONDITION 2 AND 3.	37"	46"	55"	64"	74"
6. CONDITION 2 AND 4.	30"	37"	44"	52"	59"

IF THE ABOVE BARS ARE SPACED 6" OR MORE ON CENTER, THE LAP LENGTH SHALL BE 80% OF THE LAP LENGTH GIVEN ABOVE. ALL OTHER BARS SHALL BE LAPPED AS SHOWN ON THE CONSTRUCTION DRAWINGS.

CONCRETE SCHEDULE:

CONCRETE TYPE	APPLICATION
4000 PSI, ¾ IN., 610 CEMENT CONCRETE	BACKWALLS, CURTAIN WALLS, KEEPER BLOCKS,
4000 PSI, ¾ IN., 585 HP CEMENT CONCRETE	CONCRETE DECK, PIER COLUMNS & CAPS, END DIAPHRAGMS, WALL COPING, RAILING POST FOUNDATIONS
4000 PSI, 1½ IN., 565 CEMENT CONCRETE	APPROACH SLABS, ABUTMENT FOOTINGS & STEMS, PIER FOOTINGS, CANTILEVER WALLS

ESTIMATED QUANTITIES
(NOT GUARANTEED)

ITEM DESCRIPTION	QUANTITY	UNITS
BRIDGE EXCAVATION	320	CY
GRAVEL BORROW FOR BACKFILLING STRUCTURE AND PIPES	280	CY
BRIDGE STRUCTURE BRIDGE NO. F-07-033 = N-03-029	1	LS

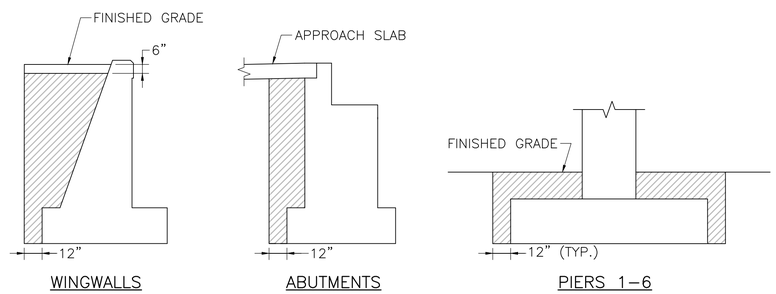

NOTE:
HATCHED AREA INDICATES LIMITS OF GRAVEL BORROW FOR BACKFILLING STRUCTURES AND PIPES.

LIMITS OF GRAVEL BORROW
FOR BACKFILLING OF STRUCTURES AND PIPES
NOT TO SCALE

*
BQX BR0

DATE	DESCRIPTION
SEPT. 8, 2018	ISSUED FOR CONSTRUCTION

USE ONLY PRINTS OF LATEST DATE

607732_BR2(F07033).DWG Plotted on 20-Aug-2018 4:57 PM
Final Structural Submittal (SF) 08-September-2018

FRAMINGHAM/NATICK
COCHITUATE RAIL TRAIL

STATE	FED. AID PROJ. NO.	SHEET NO.	TOTAL SHEETS
MA	STP(TE)/TAP/CMQ-0035(206)	169	253
PROJECT FILE NO. 607732			

BORING LOGS (1 OF 2)

BORING NOTES:

1. LOCATION OF THE BORINGS SHOWN THUS: ⊕ BB-1
2. BORINGS ARE TAKEN FOR PURPOSE OF DESIGN AND SHOW CONDITIONS AT BORING POINTS ONLY, BUT DO NOT NECESSARILY SHOW THE NATURE OF THE MATERIALS TO BE ENCOUNTERED DURING CONSTRUCTION.
3. WATER LEVELS SHOWN ON THE BORING LOGS WERE OBSERVED AT THE TIME OF TAKING BORINGS AND DO NOT NECESSARILY SHOW THE TRUE GROUND WATER LEVEL.
4. FIGURES IN COLUMNS INDICATE NUMBER OF BLOWS REQUIRED TO DRIVE A $1\frac{3}{8}$" I.D. SPLIT SPOON SAMPLER 6" USING A 140 POUND WEIGHT FALLING 30".
5. BORING SAMPLES ARE STORED AT A STORAGE FACILITY LOCATED ON ROUTE 114 (219 WINTHROP AVE.) IN LAWRENCE, MA. THE CONTRACTOR MAY EXAMINE THE SOIL AND ROCK SAMPLES BY CONTACTING THE MASSDOT GEOTECHNICAL SECTION AT 10 PARK PLAZA, BOSTON MA,.
6. ALL BORINGS WERE MADE IN JULY AND AUGUST OF 2014.
7. BORINGS WERE MADE BY NORTHERN DRILL SERVICE, INC., 130 EAST MAIN ST. BLDG. A, NORTHBOROUGH, MA 01532
8. THE NORTH AMERICAN VERTICAL DATUM (NAVD) OF 1988 IS USED THROUGHOUT.

BORING INFORMATION
LOCATION: 150 ft N of Rte 30, Framingham
GROUND SURFACE EL. (ft): ~147 ft **DATE START/END:** 7/31/2014 - 7/31/2014
VERTICAL DATUM: NAVD 88 **DRILLING COMPANY:** Northern Drill Service, Inc.
TOTAL DEPTH (ft): 50.3 **DRILLER NAME:** Tim Tucker
LOGGED BY: D. McVeety **RIG TYPE:** Mobile B-48 Track-Mounted

BORING
BB-1
PAGE 1 of 2

DRILLING INFORMATION
HAMMER TYPE: Automatic **CASING I.D./O.D.:** 5 inch/ 5.5 inch **CORE BARREL TYPE:**
AUGER I.D./O.D.: NA / NA **DRILL ROD O.D.:** NM **CORE BARREL I.D./O.D.** NA / NA
DRILLING METHOD: Rotary - Wash
WATER LEVEL DEPTHS (ft): ▽ 11.8 7/31/2014

ABBREVIATIONS: Pen. = Penetration Length; Rec. = Recovery Length; RQD = Rock Quality Designation; * Length of Sound Core>4 in / Pen.,%; WOH = Weight of Rods; WOH = Weight of Hammer; S = Split Spoon Sample; C = Core Sample; U = Undisturbed Sample; SC = Sonic Core; PI = Plasticity Index; PID = Photoionization Detector; HSA = Hollow-Stem Auger; I.D./O.D. = Inside Diameter/Outside Diameter; Qp = Pocket Penetrometer Strength; Sv = Pocket Torvane Shear Strength; LL = Liquid Limit; DP = Direct Push Sample; HSA = Hollow-Stem Auger; NA, NM = Not Applicable, Not Measured; Blows per 6 in.; 140-lb hammer falling 30 inches to drive a 2-inch-O.D. split spoon sampler.

Elev. (ft)	Depth (ft)	Sample No.	Depth (ft)	Pen./ Rec. (in)	Blows per 6 in. or RQD	Drilling Remarks/ Field Test Data	Layer Name	Soil and Rock Description
147		S1	0 to 2	24/20	11-30-50-24	PIER 1 B.O.F. EL. 142.0	FILL	S1: Dry, very dense, dark brown, FINE TO COARSE SAND, some fine to medium gravel
142	5	S2	4 to 6	24/12	2-2-3-4			S2: Moist, loose, dark brown, FINE TO COARSE SAND, some fine to medium gravel, trace brick fragments
137	10	S3	9 to 11	24/14	10-9-10-11	WATER TABLE EL. 135.2	SILT AND SAND	S3: Moist, medium dense, brown, FINE TO COARSE SAND, some fine gravel, some inorganic silt
132	15	S4	14 to 16	24/15	7-8-9-9			S4: Moist, medium dense, brown, FINE TO COARSE SAND, some fine gravel
127	20	S5	19 to 21	24/15	5-5-8-8			S5: Moist, medium dense, brown, INORGANIC SILT, some fine gravel, trace fine to coarse sand
122	25	S6	24 to 26	24/13	8-8-8-7	Open hole starting at 24'		S6: Moist, medium dense, brown, FINE SAND, trace fine gravel

NOTES: Soil descriptions are in accordance with the MassDOT special provisions for Boring and Geotechnical Testing

PROJECT NAME: Cochituate Rail Trail
CITY/STATE: Natick, MA
GEI PROJECT NUMBER: 140871-0
GEI Consultants

BORING INFORMATION
LOCATION: 150 ft N of Rte 30, Framingham
GROUND SURFACE EL. (ft): ~147 ft **DATE START/END:** 7/31/2014 - 7/31/2014
VERTICAL DATUM: NAVD 88 **DRILLING COMPANY:** Northern Drill Service, Inc.

BORING
BB-1
PAGE 2 of 2

Elev. (ft)	Depth (ft)	Sample No.	Depth (ft)	Pen./ Rec. (in)	Blows per 6 in. or RQD	Drilling Remarks/ Field Test Data	Layer Name	Soil and Rock Description
117	30	S7	29 to 31	24/12	16-20-20-36	After S7, set 5/5.5" casing down to 29; encountered resistance, so 4/4.5" casing set to 38.5'	SILT AND SAND	S7 (0-6"): Moist, very dense, brown, FINE SAND, some inorganic silt; S7 (6"-12"): Moist, very dense, brown, INORGANIC SILT, some fine gravel, some fine sand
112	35	S8	34 to 36	24/10	13-29-26-42		GLACIAL TILL	S8: Moist, very dense, brown, FINE TO MEDIUM GRAVEL, some coarse sand, some inorganic silt
107	40	S9	39 to 41	24/12	21-43-43-53			S9: Moist, very dense, grey, FINE GRAVEL, some coarse sand, some inorganic silt; stained, angular rock fragments
102	45	S10	44 to 46	24/10	20-17-44-42			S10: Moist, very dense, grey-brown, FINE GRAVEL, some inorganic silt, some coarse sand; angular, slightly weathered rock fragments
97	50	S11	49 to 50.3	16/12	37-78-100/4"			S11 (0-7"): Moist, very dense, grey, FINE GRAVEL, some inorganic silt, some coarse sand; angular, slightly weathered rock fragments; S11 (7"-12"): Moist, very dense, grey, FINE GRAVEL, some inorganic silt; angular, weathered rock fragments
92	55							Bottom of boring at 50.3 ft Borehole backfilled with cuttings.
87								

NOTES: Soil descriptions are in accordance with the MassDOT special provisions for Boring and Geotechnical Testing

PROJECT NAME: Cochituate Rail Trail
CITY/STATE: Natick, MA
GEI PROJECT NUMBER: 140871-0
GEI Consultants

BORING BB-1
SCALE: $\frac{3}{16}$" = 1'-0"

BORING INFORMATION
LOCATION: 50 ft N of Rte 30, Framingham
GROUND SURFACE EL. (ft): ~148 ft **DATE START/END:** 7/29/2014 - 7/30/2014
VERTICAL DATUM: NAVD 88 **DRILLING COMPANY:** Northern Drill Service, Inc.
TOTAL DEPTH (ft): 45.6 **DRILLER NAME:** Tim Tucker
LOGGED BY: D. McVeety and Heather Shields **RIG TYPE:** Mobile B-48 Track-Mounted

BORING
BB-2
PAGE 1 of 2

DRILLING INFORMATION
HAMMER TYPE: Automatic **CASING I.D./O.D.:** 4 inch/ 4.5 inch **CORE BARREL TYPE:**
AUGER I.D./O.D.: NA / NA **DRILL ROD O.D.:** NM **CORE BARREL I.D./O.D.** NA / NA
DRILLING METHOD: Rotary - Wash
WATER LEVEL DEPTHS (ft): ▽ 11.7 7/29/2014

ABBREVIATIONS: Pen. = Penetration Length; Rec. = Recovery Length; RQD = Rock Quality Designation; * Length of Sound Core>4 in / Pen.,%; WOH = Weight of Rods; WOH = Weight of Hammer; S = Split Spoon Sample; C = Core Sample; U = Undisturbed Sample; SC = Sonic Core; DP = Direct Push Sample; HSA = Hollow-Stem Auger; Qp = Pocket Penetrometer Strength; Sv = Pocket Torvane Shear Strength; LL = Liquid Limit; PI = Plasticity Index; PID = Photoionization Detector; I.D./O.D. = Inside Diameter/Outside Diameter; NA, NM = Not Applicable, Not Measured; Blows per 6 in.; 140-lb hammer falling 30 inches to drive a 2-inch-O.D. split spoon sampler.

Elev. (ft)	Depth (ft)	Sample No.	Depth (ft)	Pen./ Rec. (in)	Blows per 6 in. or RQD	Drilling Remarks/ Field Test Data	Layer Name	Soil and Rock Description
148		S1	0 to 2	24/15	5-14-13-11	PIER 3 B.O.F. EL. 142.0	FILL	S1: Moist, medium dense, dark brown, FINE TO COARSE SAND, some fine gravel, trace inorganic silt; fill
143	5	S2	4 to 6	24/15	5-3-2-2			S2: Moist, loose, light brown, FINE SAND, some inorganic silt
138	10	S3	9 to 11	24/18	6-5-6-5	WATER TABLE EL. 136.3	SAND AND SILT	S3: Moist, medium dense, light red brown, FINE SAND, trace inorganic silt
133	15	S4	14 to 16	24/18	5-5-4-6	Open hole starting at 14 ft		S4: Moist, medium dense, light grey brown, INORGANIC SILT, some fine sand
128	20	S5	19 to 21	24/11	2-1-2-2			S5: Wet, loose, grey, INORGANIC SILT, some fine sand
123	25	S6	24 to 26	24/19	WOH-4-11-20			S6 (0-11"): Wet, medium dense, grey, INORGANIC SILT, some fine sand; S6 (11"-19"): Moist, medium dense, light grey brown, FINE SAND, some inorganic silt, some medium gravel

NOTES: Soil descriptions are in accordance with the MassDOT special provisions for Boring and Geotechnical Testing

PROJECT NAME: Cochituate Rail Trail
CITY/STATE: Natick, MA
GEI PROJECT NUMBER: 140871-0
GEI Consultants

LOCATION: 50 ft N of Rte 30, Framingham
GROUND SURFACE EL. (ft): ~148 ft **DATE START/END:** 7/29/2014 - 7/30/2014
VERTICAL DATUM: NAVD 88 **DRILLING COMPANY:** Northern Drill Service, Inc.

BORING
BB-2
PAGE 2 of 2

Elev. (ft)	Depth (ft)	Sample No.	Depth (ft)	Pen./ Rec. (in)	Blows per 6 in. or RQD	Drilling Remarks/ Field Test Data	Layer Name	Soil and Rock Description
118	30	S7	29 to 31	24/11	16-10-29-28	After S6, drove casing to 29 ft After S7, set 3" ID/3.5" OD casing to 34 ft	GLACIAL TILL	S7: Moist, dense, grey, FINE TO MEDIUM GRAVEL, some inorganic silt, trace coarse sand; weathered rock fragments
113	35	S8	34 to 36	24/11	24-39-21-20	After S8, spun 3" casing to 38 ft		S8: Moist, very dense, grey, FINE TO MEDIUM GRAVEL, some inorganic silt, trace coarse sand
108	40	C1	36.5 to 39.5	36/24	17	Core barrel jammed at ~39.5 ft After C2, spun 3" casing to 40.5 ft New drill bit for C3 3"/3.5" casing from 35.5 to 40.5 ft broken off; not recovered	BEDROCK	C1 SCHIST: Gray and light gray, fracture surfaces are irregular with straining, slightly weathered, hard. Vertical fractures from 10" to 17". Fractures spaced <1" up to 4".
		C2	39.5 to 40.5	12/22	100			C2 SCHIST (0-7"): Highly fractured (gravel up to 2"); Dark gray. C2 SCHIST (7"-12"): Similar to C1, except no straining on fracture surfaces. One fracture at ~45 degrees.
103	45	C3	40.5 to 45.5	60/22	18			C3 SCHIST (0-11"): Hard, fine-medium grained, unweathered, no joints; dart gray. C3 SCHIST (11"-22"): Hard, fine-medium grained, unweathered, irregular rough fractures, highly fractured; gravel up to 1"; dark gray.
98	50							Bottom of boring at 45.5 ft Borehole backfilled with cuttings.
93	55							
88								

NOTES: Soil descriptions are in accordance with the MassDOT special provisions for Boring and Geotechnical Testing

PROJECT NAME: Cochituate Rail Trail
CITY/STATE: Natick, MA
GEI PROJECT NUMBER: 140871-0
GEI Consultants

BORING BB-2
SCALE: $\frac{3}{16}$" = 1'-0"

* BQX BR0	
SEPT. 8, 2018	ISSUED FOR CONSTRUCTION
DATE	DESCRIPTION
USE ONLY PRINTS OF LATEST DATE	

607732_BR3(F07033).DWG Plotted on 20-Aug-2018 4:56 PM
Final Structural Submittal (SF) 08-September-2018

FRAMINGHAM/NATICK
COCHITUATE RAIL TRAIL

STATE	FED. AID PROJ. NO.	SHEET NO.	TOTAL SHEETS
MA	STP(TE)/TAP/CMQ-0035(206)	170	253

PROJECT FILE NO. 607732

BORING LOGS (2 OF 2)

BORING NOTES:

1. SEE NOTES ON SHEET 3.

BORING INFORMATION
LOCATION: 50 ft S of Rte 30, Natick
GROUND SURFACE EL. (ft): ~147 ft **DATE START/END:** 8/1/2014 - 8/1/2014
VERTICAL DATUM: NAVD 88 **DRILLING COMPANY:** Northern Drill Service, Inc.
TOTAL DEPTH (ft): 56.0 **DRILLER NAME:** Tim Tucker
LOGGED BY: D. McVeety **RIG TYPE:** Mobile B-48 Track-Mounted

BORING
BB-3
PAGE 1 of 2

DRILLING INFORMATION
HAMMER TYPE: Automatic **CASING I.D./O.D.:** 5 inch/ 5.5 inch **CORE BARREL TYPE:**
AUGER I.D./O.D.: NA / NA **DRILL ROD O.D.:** NM **CORE BARREL I.D./O.D.** NA / NA
DRILLING METHOD: Rotary - Wash
WATER LEVEL DEPTHS (ft): ∇ 9.6 8/1/2014

ABBREVIATIONS: Pen. = Penetration Length; Rec. = Recovery Length; RQD = Rock Quality Designation; = Length of Sound Core>4 in / Pen.,%; WOR = Weight of Rods; WOH = Weight of Hammer; S = Split Spoon Sample; C = Core Sample; U = Undisturbed Sample; SC = Sonic Core; DP = Direct Push Sample; HSA = Hollow-Stem Auger; Qp = Pocket Penetrometer Strength; Sv = Pocket Torvane Shear Strength; LL = Liquid Limit; PI = Plasticity Index; PID = Photoionization Detector; I.D./O.D. = Inside Diameter/Outside Diameter; NA, NM = Not Applicable, Not Measured; Blows per 6 in.: 140-lb hammer falling 30 inches to drive a 2-inch-O.D. split spoon sampler.

Elev. (ft)	Depth (ft)	Sample No.	Depth (ft)	Pen./ Rec. (in)	Blows per 6 in. or RQD	Drilling Remarks/ Field Test Data	Layer Name	Soil and Rock Description
147		S1	0 to 2	24/13	4-11-11-9	PIER 4 B.O.F. EL. 142.0	FILL	S1: Moist, dense, dark brown, FINE TO COARSE SAND and FINE TO MEDIUM GRAVEL, trace inorganic silt
		S2	2 to 4	24/18	12-10-7-5			S2 (0-8"): Moist, medium dense, brown, FINE TO MEDIUM GRAVEL and FINE TO COARSE SAND, some inorganic silt; S2 (8"-18"): Moist, medium dense, light brown, FINE SAND, trace fine gravel
142	5	S3	4 to 6	24/10	3-6-6-6	Casing to 4' after S3		S3: Moist, medium dense, brown, FINE TO COARSE SAND
		S4	6 to 8	24/10	8-5-5-5			S4: Moist, medium dense, light brown, FINE TO COARSE SAND, trace fine gravel
137	10	S5	8 to 10	24/9	2-1/12*-1	Casing to 8' after S4 ▽ WATER TABLE EL. 137.4		S5: Moist, very loose, light brown, INORGANIC SILT, some fine to coarse sand
		S6	10 to 12	24/3	2-3-4-10	Casing to 10' after S5	SAND AND SILT	S6: Moist, medium dense, light brown, FINE TO COARSE SAND, some inorganic silt
		S7	12 to 14	24/3	15-14-12-15			S7: Wet, dense, light brown, FINE SAND, some inorganic silt
132	15	S8	14 to 16	24/15	8-5-8-7	Casing to 14' after S7		S8: Moist, medium dense, light brown, INORGANIC SILT and FINE SAND
		S9	16 to 18	24/13	9-6-7-7			S9: Moist, medium dense, light brown, INORGANIC SILT, some fine sand
127		S10	18 to 20	24/12	4-3-4-6	Casing to 18' after S9		S10 (0-6"): Moist, medium dense, light red brown, FINE SAND, some inorganic silt; S10 (6"-12"): Wet, medium dense, light brown, INORGANIC SILT, some fine sand
	20	S11	20 to 22	24/14	4-6-5-6			S11: Wet, medium dense, light brown, INORGANIC SILT, some fine sand
		S11A	22 to 24	24/0	8-8-11-10	Rock found in sample tube tip 22"-24"		S11A: NO RECOVERY
122	25	S12	24 to 26	24/14	7-9-7-8	Casing to 24' after S11A		S12: Moist, medium dense, light brown, FINE TO COARSE SAND and INORGANIC SILT

NOTES: Soil descriptions are in accordance with the MassDOT special provisions for Boring and Geotechnical Testing
PROJECT NAME: Cochituate Rail Trail
CITY/STATE: Natick, MA
GEI PROJECT NUMBER: 140871-0
GEI Consultants

LOCATION: 50 ft S of Rte 30, Natick
GROUND SURFACE EL. (ft): ~147 ft **DATE START/END:** 8/1/2014 - 8/1/2014
VERTICAL DATUM: NAVD 88 **DRILLING COMPANY:** Northern Drill Service, Inc.

BORING
BB-3
PAGE 2 of 2

Elev. (ft)	Depth (ft)	Sample No.	Depth (ft)	Pen./ Rec. (in)	Blows per 6 in. or RQD	Drilling Remarks/ Field Test Data	Layer Name	Soil and Rock Description
		S13	26 to 28	24/13	8-9-7-8		SAND AND SILT	S13 (0-7"): Moist, medium dense, light brown, FINE TO COARSE SAND and INORGANIC SILT; S13 (7"-13"): Moist, medium dense, light brown, FINE TO COARSE SAND, some inorganic silt
117	30	S13A	28.5 to 30.5	24/0	16-15-13-13	Casing to 28' after S13		S13A: NO RECOVERY
						Hole cleaned prior to S13A because rock encountered		
112	35	S14	34 to 36	24/11	15-13-11-13	Casing to 34' prior to S14	GLACIAL TILL	S14 (0-8"): Moist, dense, grey, FINE TO MEDIUM GRAVEL and FINE TO COARSE SAND, some inorganic silt; S14 (8"-11"): Moist, dense, grey, INORGANIC SILT, some fine gravel
107	40	S15	39 to 41	24/12	16-28-35-88	Unable to wash down to 39', so 4/4.0" casing to 39' with spin shoe prior to S15		S15: Moist, very dense, grey, FINE GRAVEL and FINE TO COARSE SAND, some inorganic silt
102	45	S16	44 to 44.1	1/0	34/1*	S16 stopped to prevent damage to sample spoon; grind and wash with roller bit top 45' to make sure resistance isn't from boulder	BEDROCK	S16: NO RECOVERY
		C1	45 to 50	60/52	87			C1 GABBRO/QUARTZITE: Gray and light gray, fracture surfaces smooth, irregular, at 45, 20, and 5 degrees; fresh (no staining); hard; fractures spaced 7" to 24"; fine grained; horizontal seams of light gray 1/2" thick.
97	50	C2	50 to 55	60/54	72			C2 GABBRO/QUARTZITE: Gray and light gray, fracture surfaces rough, irregular at 5, 10, 45, and 60 degrees and space 1/4" to 17"; fresh (no staining); hard; fine grained; horizontal seams of light gray 1/8" to 1/4" thick; highly fractured from 26" to 31", some fracture surfaces partially covered with silt and fine sand.
92	55							Bottom of boring at 55 ft Monitoring well installed.

NOTES: Soil descriptions are in accordance with the MassDOT special provisions for Boring and Geotechnical Testing
PROJECT NAME: Cochituate Rail Trail
CITY/STATE: Natick, MA
GEI PROJECT NUMBER: 140871-0
GEI Consultants

BORING BB-3

SCALE: $\frac{3}{16}$" = 1'-0"

BORING INFORMATION
LOCATION: 150 ft S of Rte 30, Natick
GROUND SURFACE EL. (ft): ~147 ft **DATE START/END:** 8/4/2014 - 8/4/2014
VERTICAL DATUM: NAVD 88 **DRILLING COMPANY:** Northern Drill Service, Inc.
TOTAL DEPTH (ft): 50.5 **DRILLER NAME:** Tim Tucker
LOGGED BY: D. McVeety **RIG TYPE:** Mobile B-48 Track-Mounted

BORING
BB-4
PAGE 1 of 2

DRILLING INFORMATION
HAMMER TYPE: Automatic **CASING I.D./O.D.:** 5 inch/ 5.5 inch **CORE BARREL TYPE:**
AUGER I.D./O.D.: NA / NA **DRILL ROD O.D.:** NM **CORE BARREL I.D./O.D.** NA / NA
DRILLING METHOD: Rotary - Wash
WATER LEVEL DEPTHS (ft): ∇ 7.3 8/5/2014

ABBREVIATIONS: Pen. = Penetration Length; Rec. = Recovery Length; RQD = Rock Quality Designation; = Length of Sound Core>4 in / Pen.,%; WOR = Weight of Rods; WOH = Weight of Hammer; S = Split Spoon Sample; C = Core Sample; U = Undisturbed Sample; SC = Sonic Core; DP = Direct Push Sample; HSA = Hollow-Stem Auger; Qp = Pocket Penetrometer Strength; Sv = Pocket Torvane Shear Strength; LL = Liquid Limit; PI = Plasticity Index; PID = Photoionization Detector; I.D./O.D. = Inside Diameter/Outside Diameter; NA, NM = Not Applicable, Not Measured; Blows per 6 in.: 140-lb hammer falling 30 inches to drive a 2-inch-O.D. split spoon sampler.

Elev. (ft)	Depth (ft)	Sample No.	Depth (ft)	Pen./ Rec. (in)	Blows per 6 in. or RQD	Drilling Remarks/ Field Test Data	Layer Name	Soil and Rock Description
147		S1	0 to 2	24/11	3-9-10-7	PIER 6 B.O.F. EL. 142.0	FILL	S1 (0-3"): Moist, medium dense, dark brown, VEGETABLE MUCK and FINE TO COARSE SAND; S1 (3"-11"): Moist, medium dense, brown, FINE GRAVEL, some fine to coarse sand, some inorganic silt
142	5	S2	4 to 6	24/18	3-4-4-9			S2 (0-9"): Moist, medium dense, light brown, INORGANIC SILT, some fine sand; S2 (9"-18"): S3: Moist, medium dense, light brown, FINE TO COARSE SAND, some fine gravel, some inorganic silt
137	10	S3	9 to 11	24/3	6-8-9-9	▽ WATER TABLE EL. 139.7; 3/4" gravel clogged spoon and prevented further recovery	SAND AND SILT	S3: Wet, medium dense, light brown, FINE TO COARSE SAND, some inorganic silt
132	15	S4	14 to 16	24/15	6-9-9-8			S4: Moist, medium dense, light brown, INORGANIC SILT, trace fine to coarse sand
127	20	S5	19 to 21	24/18	8-13-15-12			S5: Moist, dense, light brown, INORGANIC SILT, some fine sand
122	25	S6	24 to 26	24/12	4-6-7-8			S6 (0-2"): Moist, medium dense, light brown, INORGANIC SILT and FINE SAND; S6 (2"-12"): Wet, medium dense, light red brown, FINE TO COARSE SAND, some fine gravel, trace inorganic silt

NOTES: Soil descriptions are in accordance with the MassDOT special provisions for Boring and Geotechnical Testing
PROJECT NAME: Cochituate Rail Trail
CITY/STATE: Natick, MA
GEI PROJECT NUMBER: 140871-0
GEI Consultants

LOCATION: 150 ft S of Rte 30, Natick
GROUND SURFACE EL. (ft): ~147 ft **DATE START/END:** 8/4/2014 - 8/4/2014
VERTICAL DATUM: NAVD 88 **DRILLING COMPANY:** Northern Drill Service, Inc.

BORING
BB-4
PAGE 2 of 2

Elev. (ft)	Depth (ft)	Sample No.	Depth (ft)	Pen./ Rec. (in)	Blows per 6 in. or RQD	Drilling Remarks/ Field Test Data	Layer Name	Soil and Rock Description
117	30	S7	29 to 31	24/15	6-10-10-9	Casing to 29' prior to S7	SAND AND SILT	S7 (0-4"): Moist, madium dense, light red brown, INORGANIC SILT, some fine sand; S7 (4"-15"): Wet, medium dense, light red brown, INORGANIC SILT and FINE SAND
112	35	S8	34 to 36	24/15	4-9-10-12			S8: Moist, medium dense, light red brown, INORGANIC SILT, some fine sand
107	40	S9	39 to 41	24/16	7-8-9-10			S9: Moist, medium dense, grey, INORGANIC SILT and FINE SAND
102	45	S10	44 to 46	24/17	3-5-7-19		GLACIAL TILL	S10 (0-3"): Moist, medium dense, grey, INORGANIC SILT and FINE SAND; S10 (3"-15"): Moist, medium dense, grey, INORGANIC SILT, some fine sand; S10 (15"-17"): Moist, medium dense, grey, MEDIUM GRAVEL, some fine to coarse sand, some inorganic silt
97	50	S11	49 to 50.5	18/10	30-56-100/5"	Slight cave in prior to sampling S11		S11: Moist, very dense, grey, MEDIUM GRAVEL, trace inorganic silt
92	55							Bottom of boring at 50.5 ft; Borehole backfilled with cuttings.

NOTES: Soil descriptions are in accordance with the MassDOT special provisions for Boring and Geotechnical Testing
PROJECT NAME: Cochituate Rail Trail
CITY/STATE: Natick, MA
GEI PROJECT NUMBER: 140871-0
GEI Consultants

BORING BB-4

SCALE: $\frac{3}{16}$" = 1'-0"

* BQX BR0	
SEPT. 8, 2018	ISSUED FOR CONSTRUCTION
DATE	DESCRIPTION
USE ONLY PRINTS OF LATEST DATE	

SHEET 4 OF 29 SHEETS BRIDGE NO. F-07-033 = N-03-029 (*)

607732_BR4(F07033).DWG Plotted on 20-Aug-2018 4:56 PM

Final Structural Submittal (SF) 08-September-2018

FRAMINGHAM/NATICK
COCHITUATE RAIL TRAIL

STATE	FED. AID PROJ. NO.	SHEET NO.	TOTAL SHEETS
MA	STP(TE)/TAP/CMQ-0035(206)	171	253
PROJECT FILE NO. 607732			

GENERAL PLAN AND ELEVATION

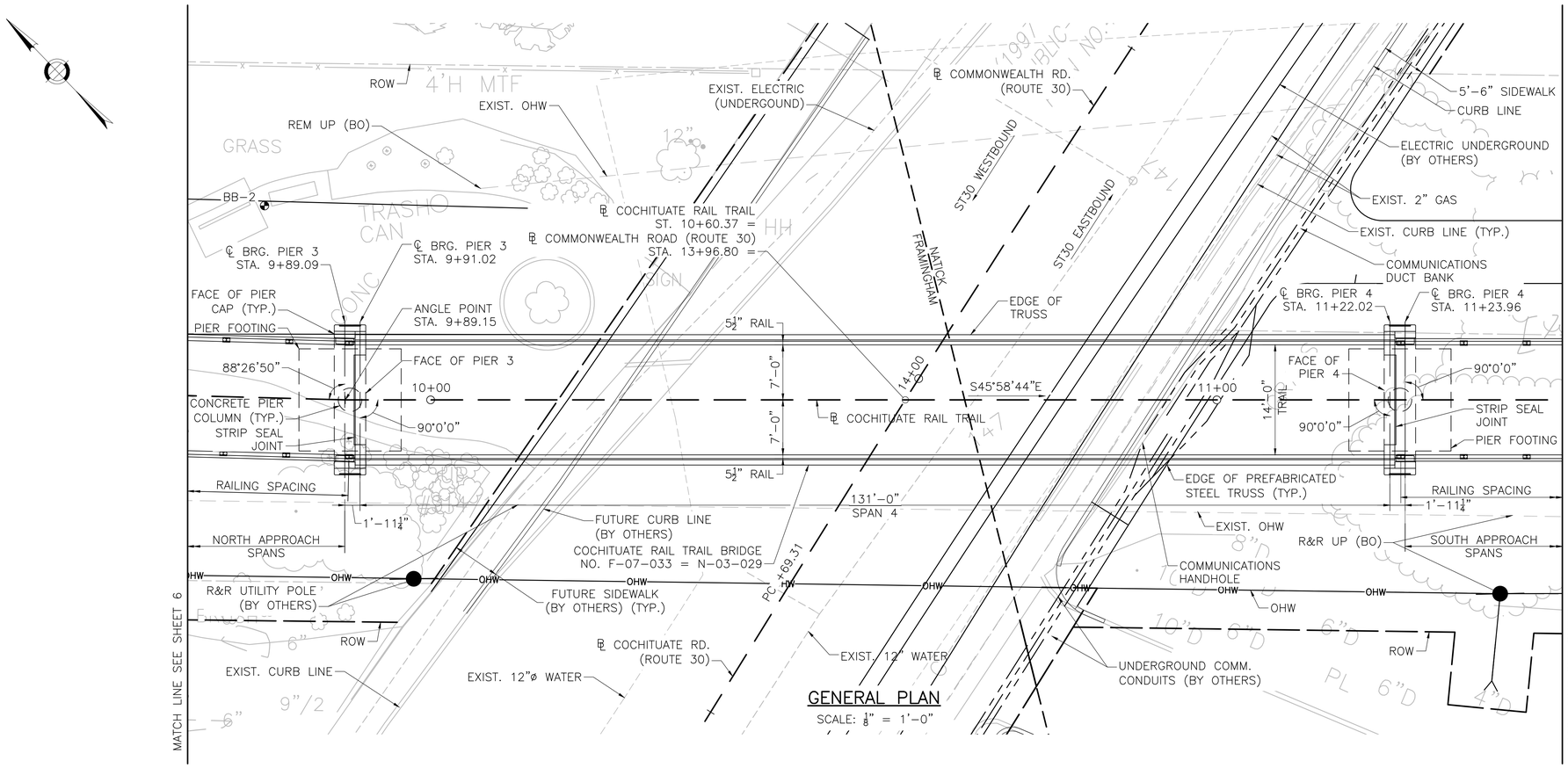

GENERAL PLAN

SCALE: ⅛" = 1'-0"

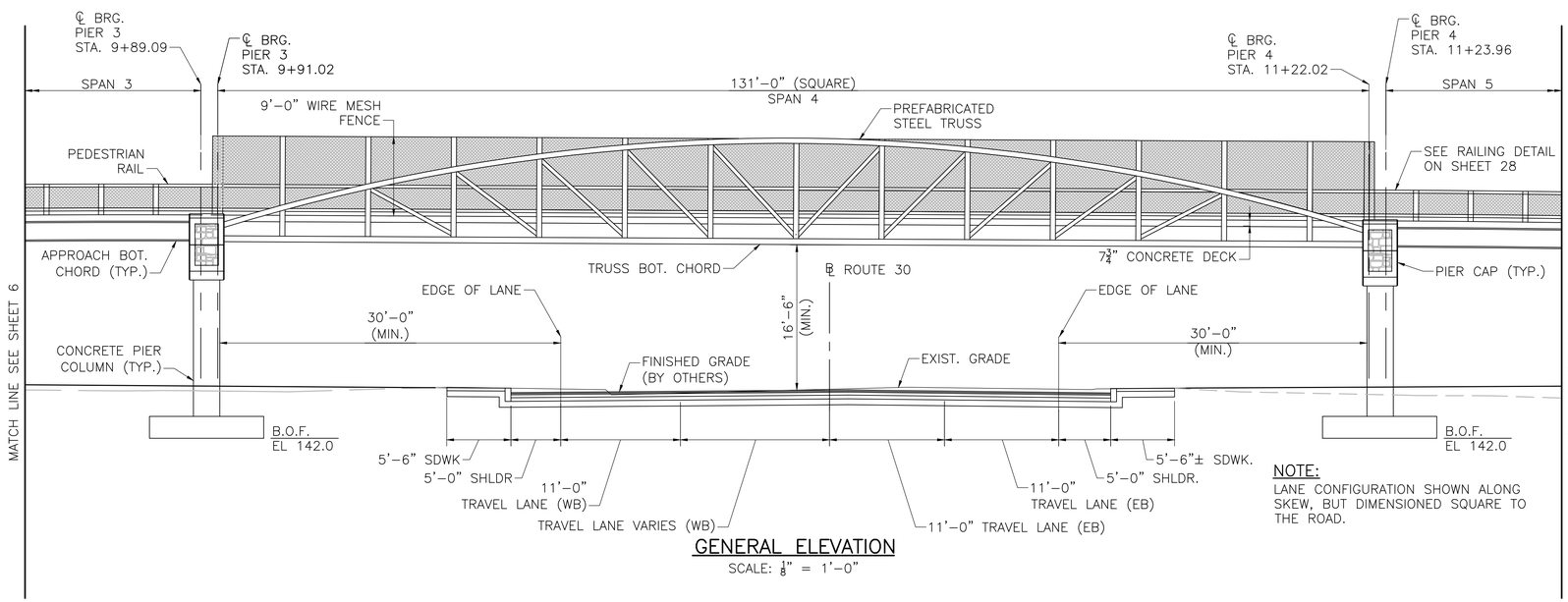

GENERAL ELEVATION

SCALE: ⅛" = 1'-0"

NOTE:
LANE CONFIGURATION SHOWN ALONG SKEW, BUT DIMENSIONED SQUARE TO THE ROAD.

*
BQX BR0

DATE	DESCRIPTION
SEPT. 8, 2018	ISSUED FOR CONSTRUCTION
USE ONLY PRINTS OF LATEST DATE	

607732_BR5(F07033).DWG Plotted on 20-Aug-2018 4:55 PM
Final Structural Submittal (SF) 08-September-2018

FRAMINGHAM/NATICK
COCHITUATE RAIL TRAIL

STATE	FED. AID PROJ. NO.	SHEET NO.	TOTAL SHEETS
MA	STP(TE)/TAP/CMQ-0035(206)	172	253
PROJECT FILE NO. 607732			

NORTH APPROACH GENERAL PLAN AND ELEVATION

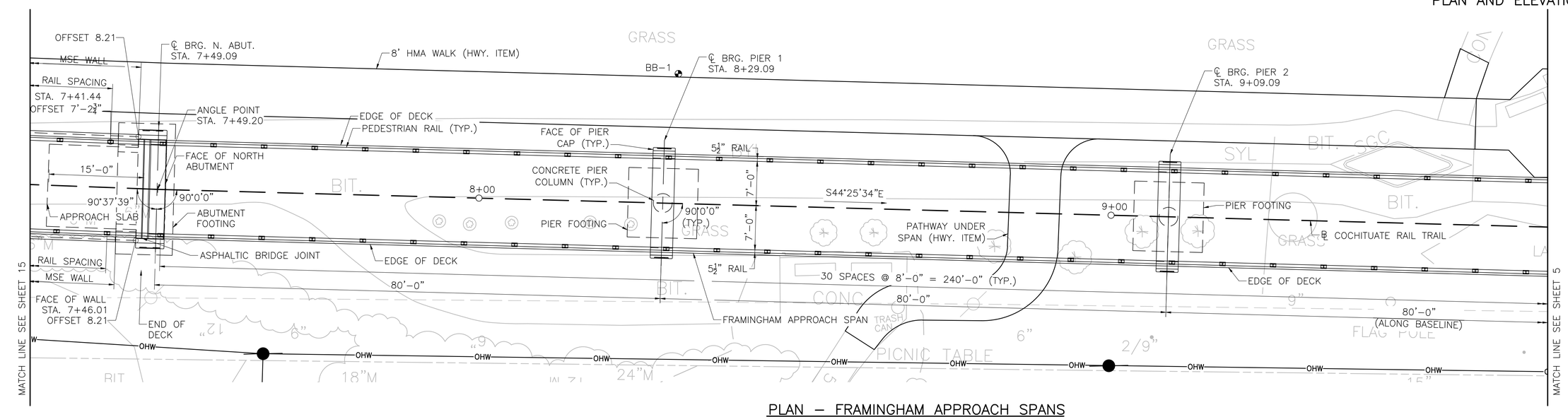

PLAN – FRAMINGHAM APPROACH SPANS

SCALE: ⅛" = 1'-0"

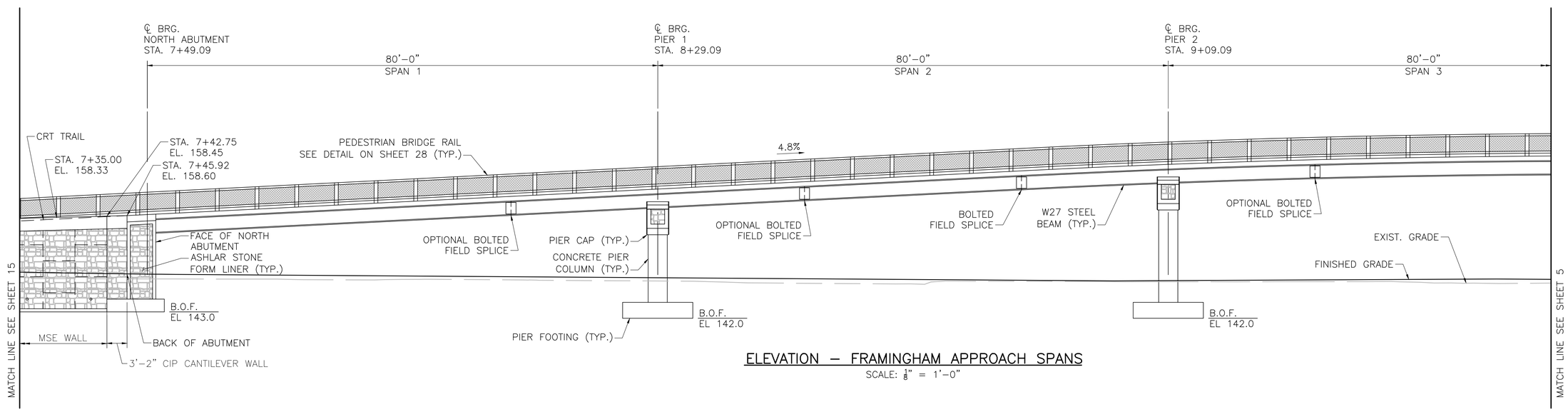

ELEVATION – FRAMINGHAM APPROACH SPANS

SCALE: ⅛" = 1'-0"

*
BQX
BR0

DATE	DESCRIPTION
SEPT. 8, 2018	ISSUED FOR CONSTRUCTION
USE ONLY PRINTS OF LATEST DATE	

607732_BR6(F07033).DWG Plotted on 20-Aug-2018 4:55 PM
Final Structural Submittal (SF) 08-September-2018

FRAMINGHAM/NATICK
COCHITUATE RAIL TRAIL

STATE	FED. AID PROJ. NO.	SHEET NO.	TOTAL SHEETS
MA	STP(TE)/TAP/CMQ-0035(206)	173	253
PROJECT FILE NO. 607732			

SOUTH APPROACH GENERAL PLAN AND ELEVATION

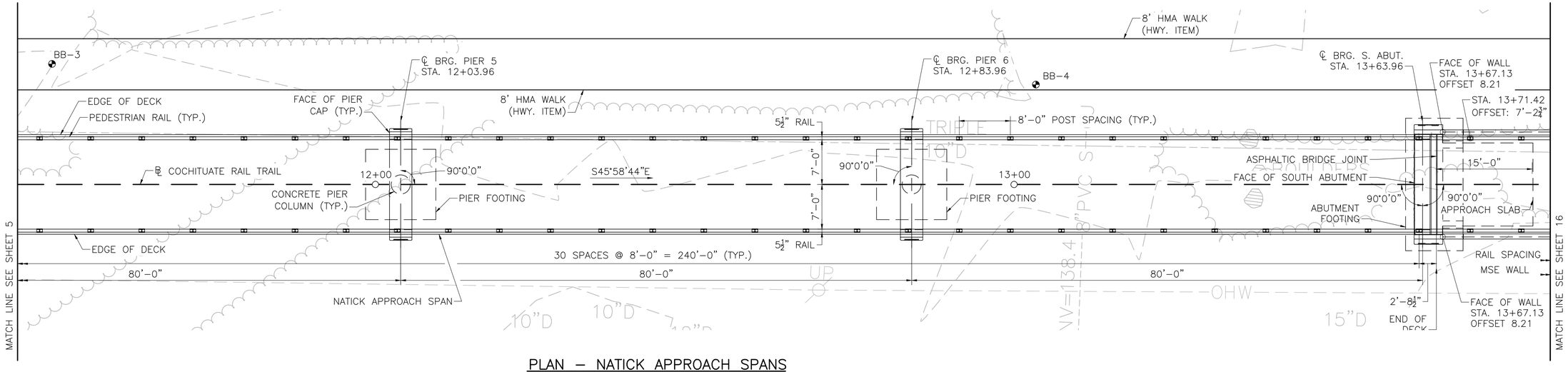

PLAN – NATICK APPROACH SPANS

SCALE: ⅛" = 1'-0"

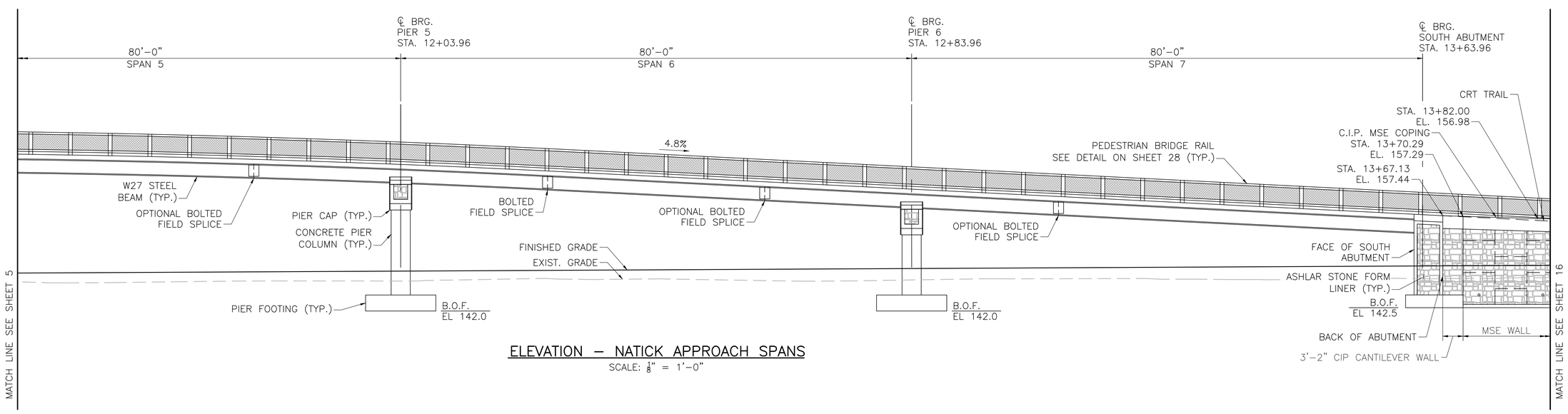

ELEVATION – NATICK APPROACH SPANS

SCALE: ⅛" = 1'-0"

*
BQX BR0

DATE	DESCRIPTION
SEPT. 8, 2018	ISSUED FOR CONSTRUCTION
USE ONLY PRINTS OF LATEST DATE	

607732_BR7(F07033).DWG Plotted on 20-Aug-2018 4:54 PM
Final Structural Submittal (SF) 08-September-2018

FRAMINGHAM/NATICK
COCHITUATE RAIL TRAIL

STATE	FED. AID PROJ. NO.	SHEET NO.	TOTAL SHEETS
MA	STP(TE)/TAP/CMQ-0035(206)	174	253
PROJECT FILE NO. 607732			

ABUTMENT PLANS AND ELEVATIONS

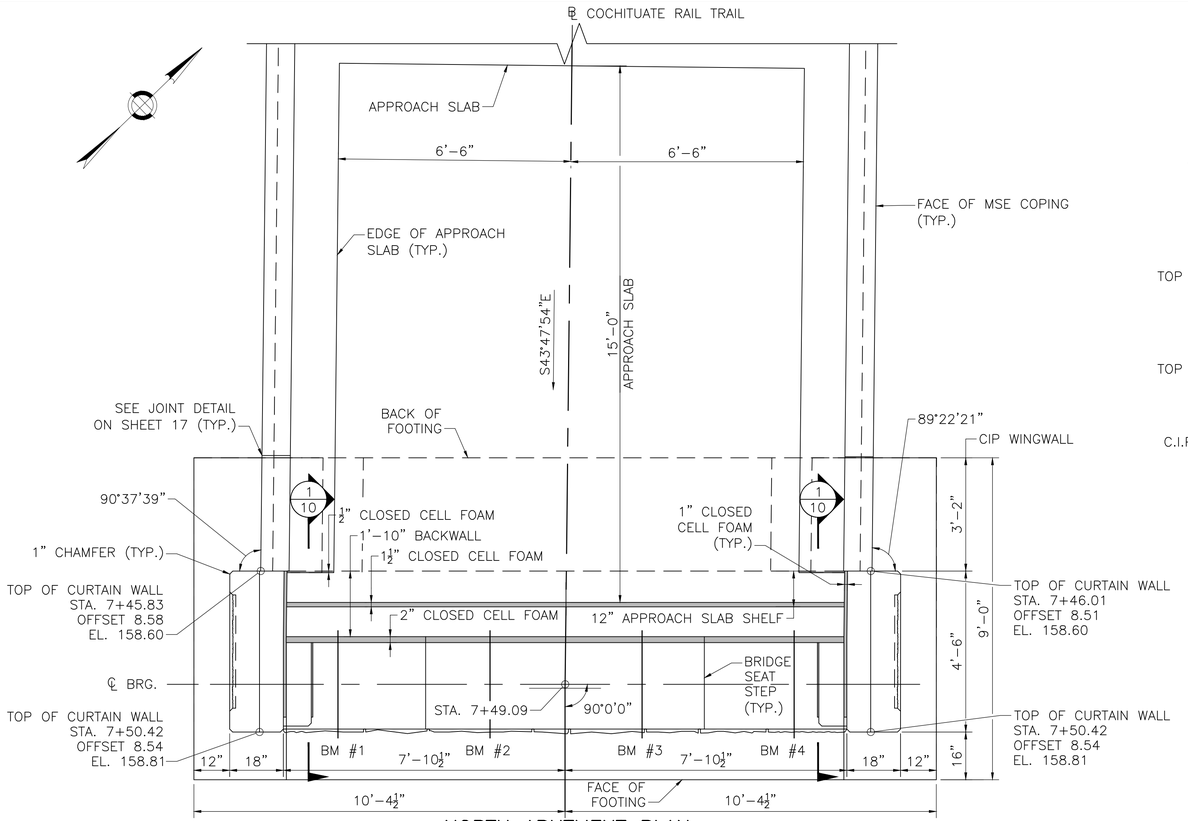

NORTH ABUTMENT PLAN

SCALE: 1/2" = 1'-0"

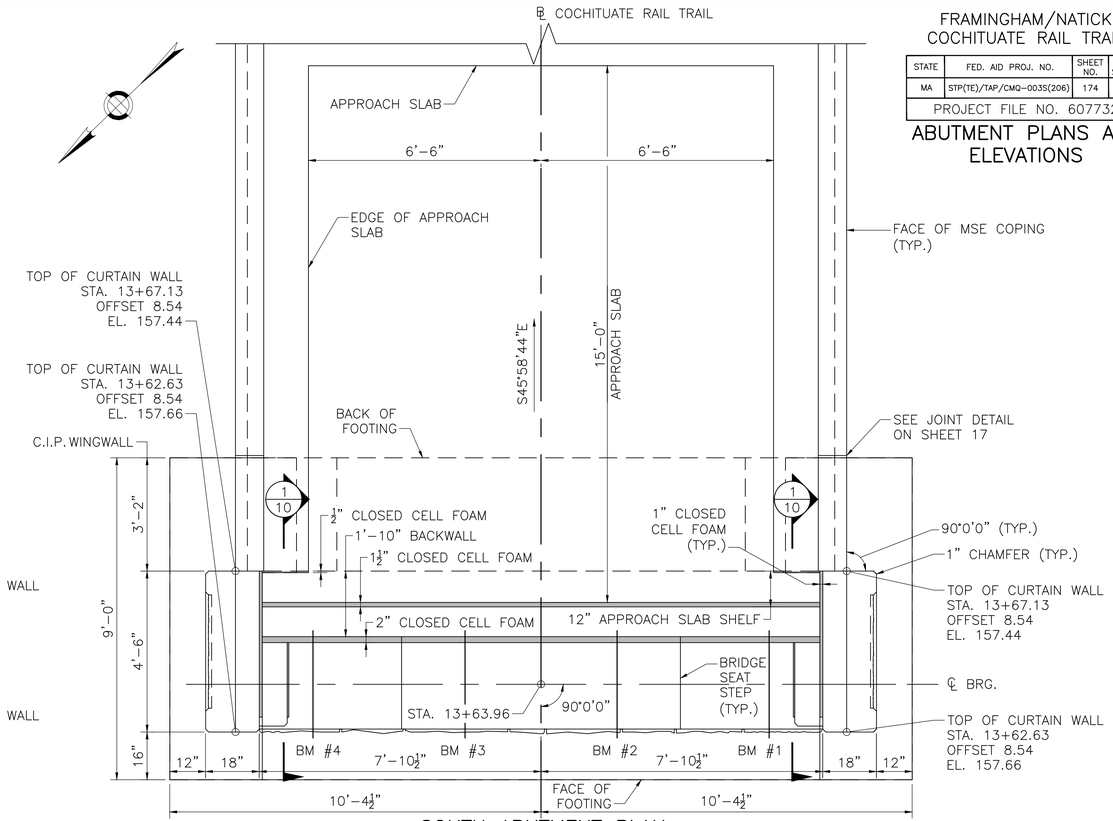

SOUTH ABUTMENT PLAN

SCALE: 1/2" = 1'-0"

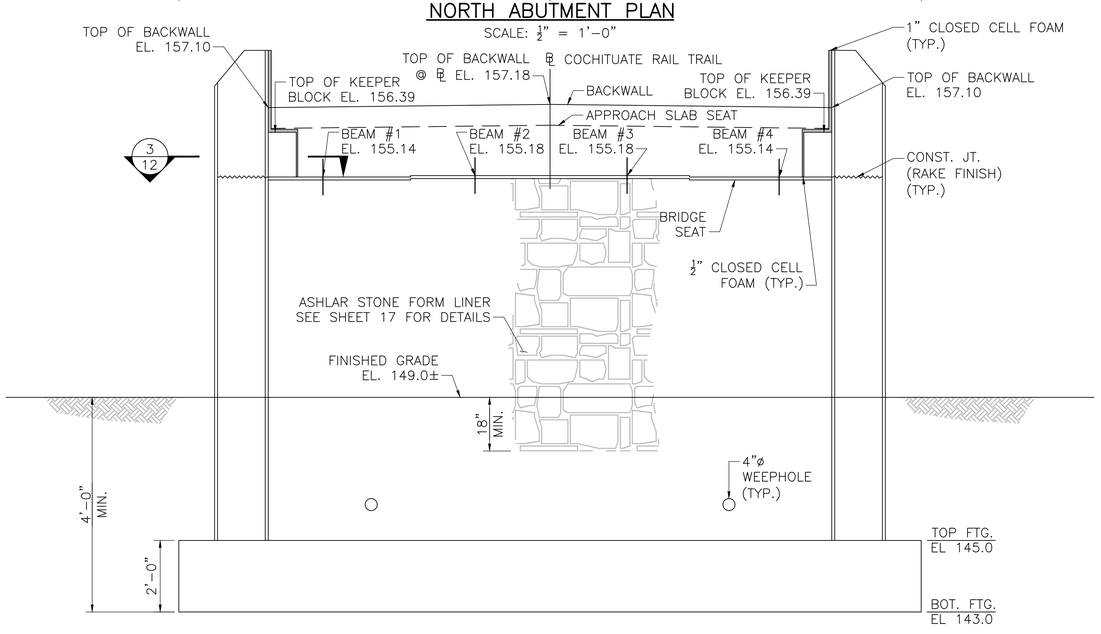

NORTH ABUTMENT ELEVATION

SCALE: 1/2" = 1'-0"

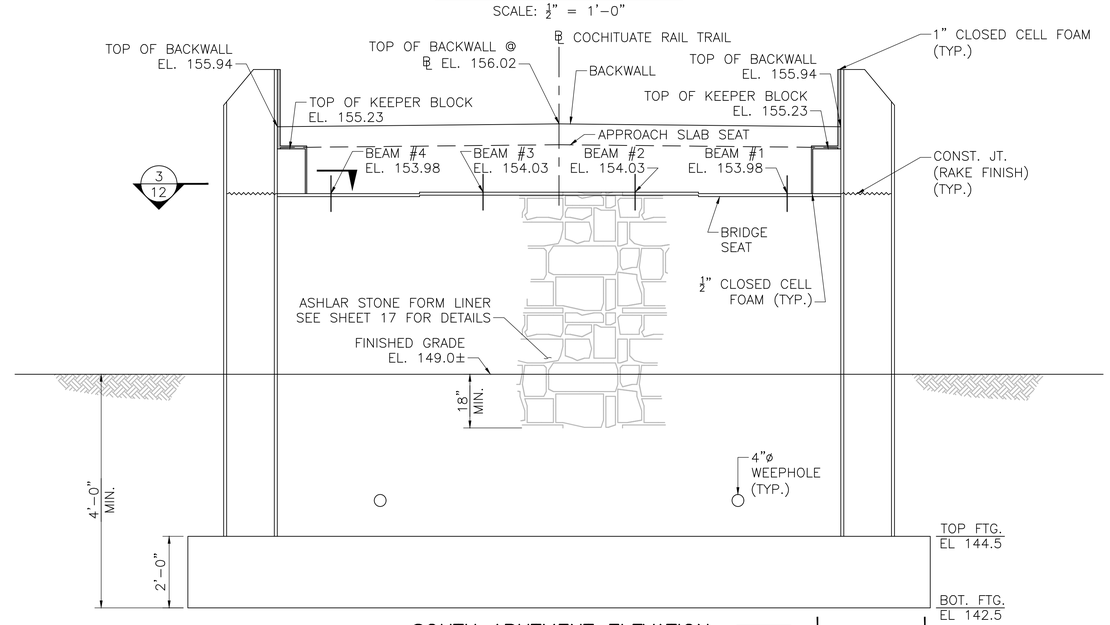

SOUTH ABUTMENT ELEVATION

SCALE: 1/2" = 1'-0"

*
BQX BR0

DATE	DESCRIPTION
SEPT. 8, 2018	ISSUED FOR CONSTRUCTION
USE ONLY PRINTS OF LATEST DATE	

607732_BR8(F07033).DWG Plotted on 20-Aug-2018 4:54 PM
Final Structural Submittal (SF) 08-September-2018

FRAMINGHAM/NATICK
COCHITUATE RAIL TRAIL

STATE	FED. AID PROJ. NO.	SHEET NO.	TOTAL SHEETS
MA	STP(TE)/TAP/CMQ-0035(206)	175	253
PROJECT FILE NO. 607732			

PIER PLANS AND ELEVATIONS

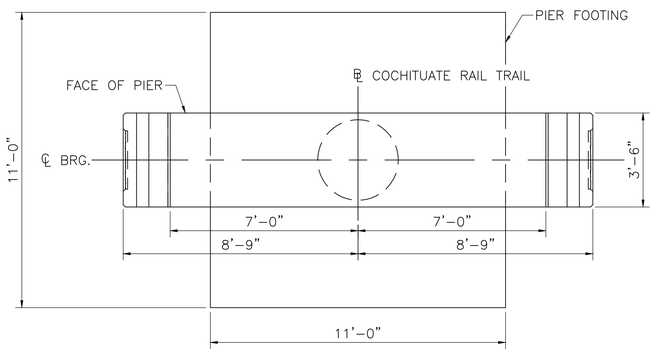

[PIER 1 SHOWN, PIERS 2, 5 & 6 SIMILAR]

INTERMEDIATE PIER PLAN

SCALE: 3/8" = 1'-0"

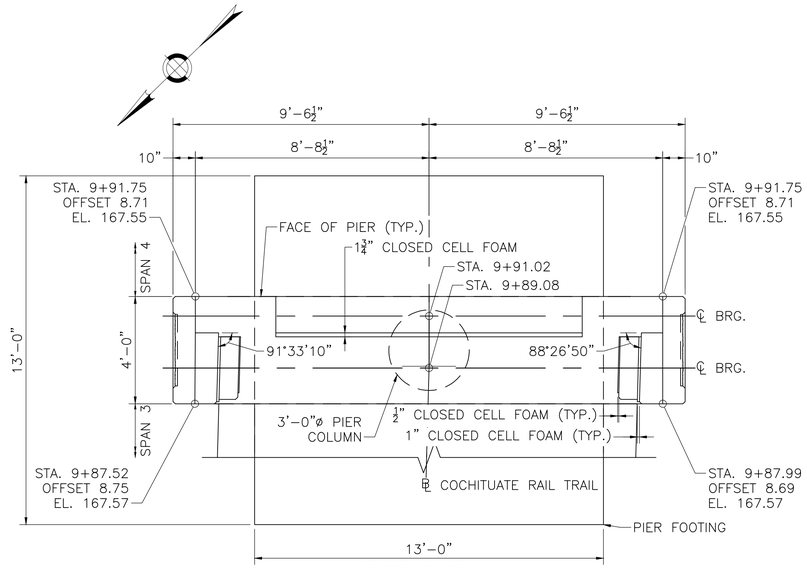

PIER 3 PLAN

SCALE: 3/8" = 1'-0"

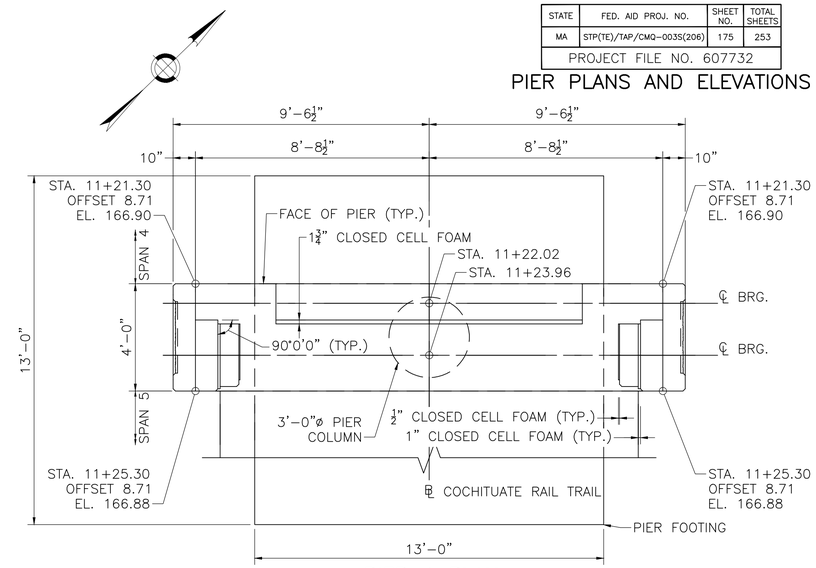

PIER 4 PLAN

SCALE: 3/8" = 1'-0"

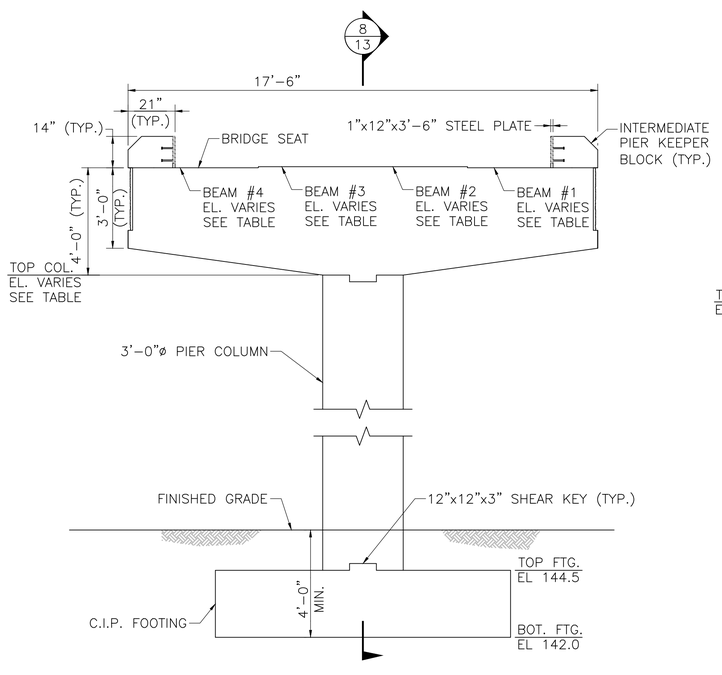

PIER 1, 2, 5, & 6 ELEVATION

SCALE: 3/8" = 1'-0"

	PIER 1	PIER 2	PIER 5	PIER 6
BEAM #1 EL.	EL. 158.98	EL. 162.70	EL. 161.56	EL. 157.82
BEAM #2 EL.	EL. 159.02	EL. 162.74	EL. 161.61	EL. 157.86
BEAM #3 EL.	EL. 159.02	EL. 162.74	EL. 161.61	EL. 157.86
BEAM #4 EL.	EL. 158.98	EL. 162.70	EL. 161.56	EL. 157.82
TOP. COL. EL.	EL. 154.98	EL. 158.70	EL. 157.56	EL. 153.82

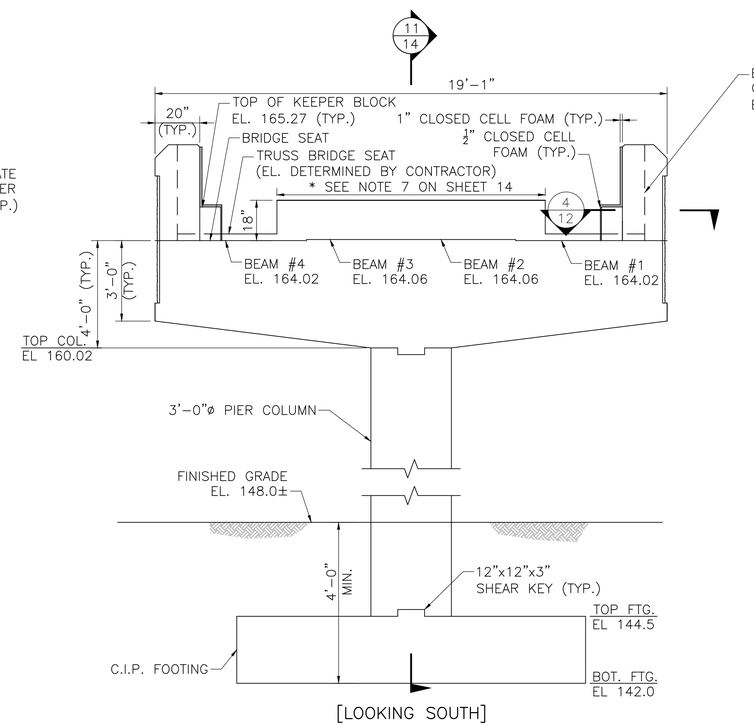

[LOOKING SOUTH]

PIER 3 ELEVATION

SCALE: 3/8" = 1'-0"

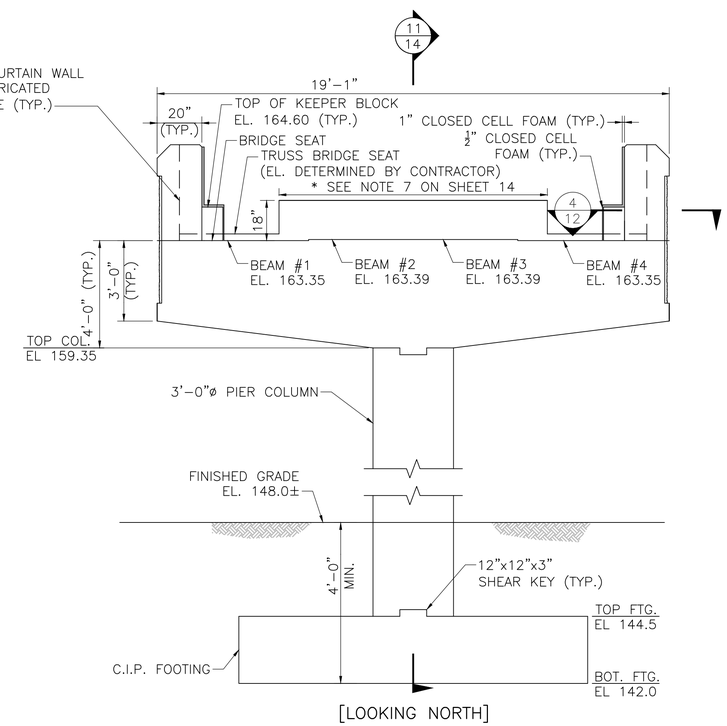

[LOOKING NORTH]

PIER 4 ELEVATION

SCALE: 3/8" = 1'-0"

*
BQX BR0

DATE	DESCRIPTION
SEPT. 8, 2018	ISSUED FOR CONSTRUCTION
USE ONLY PRINTS OF LATEST DATE	

607732_BR9(F07033).DWG Plotted on 20-Aug-2018 4:54 PM
Final Structural Submittal (SF) 08-September-2018

FRAMINGHAM/NATICK
COCHITUATE RAIL TRAIL

STATE	FED. AID PROJ. NO.	SHEET NO.	TOTAL SHEETS
MA	STP(TE)/TAP/CMQ-003S(206)	176	253
PROJECT FILE NO. 607732			

ABUTMENT DETAILS (1 OF 2)

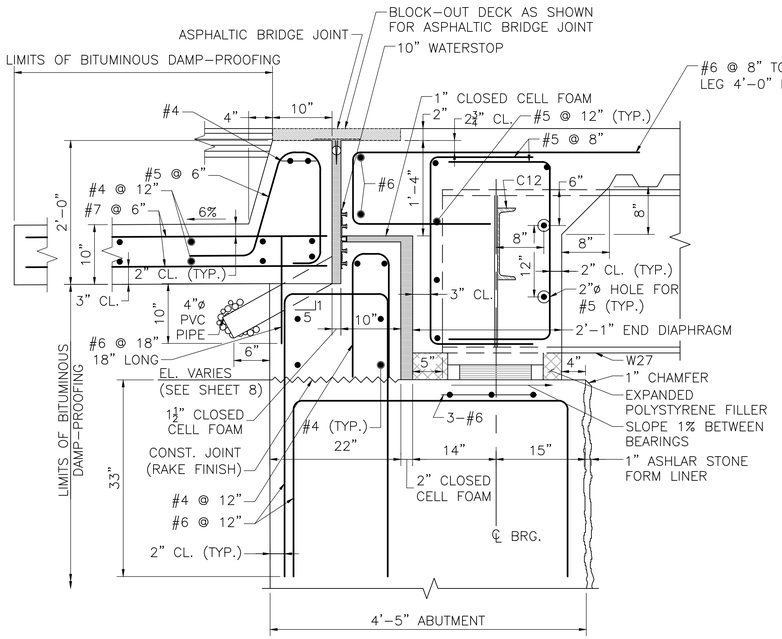

DETAILS AT ABUTMENT – PATHWAY SECTION

SCALE: 1" = 1'-0"

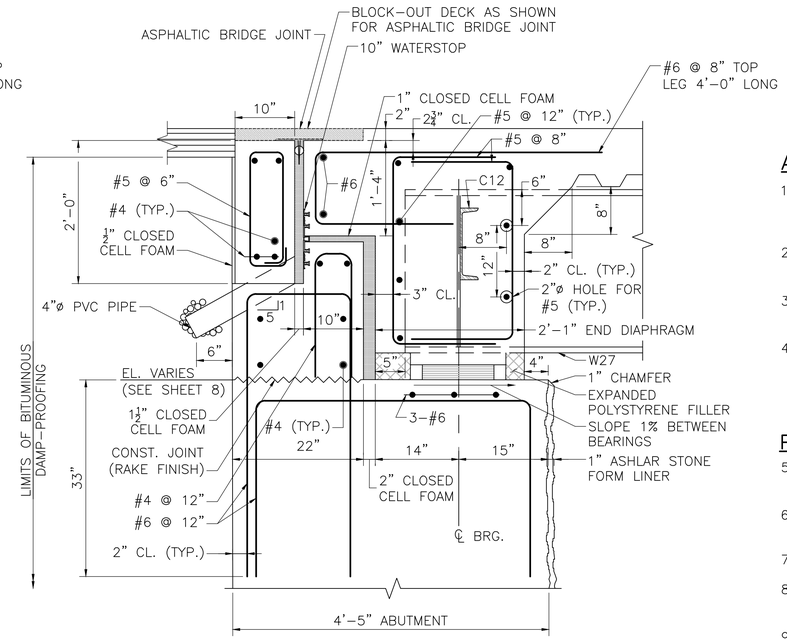

SECTION 1

SCALE: 1" = 1'-0"

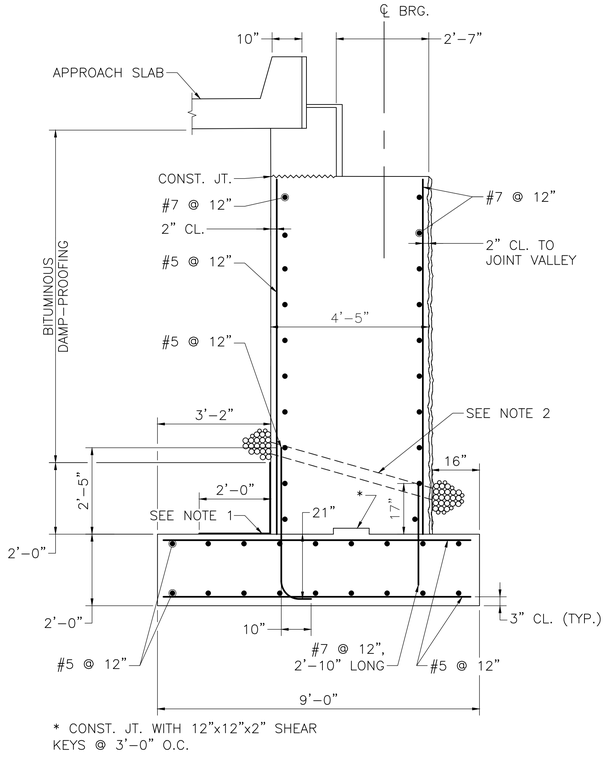

* CONST. JT. WITH 12"x12"x2" SHEAR KEYS @ 3'-0" O.C.

TYPICAL ABUTMENT SECTION

SCALE: ½" = 1'-0"

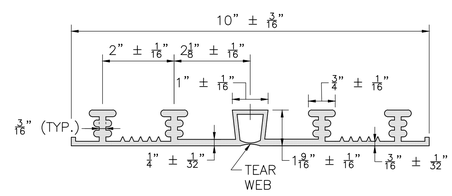

10" WATERSTOP

NOT TO SCALE

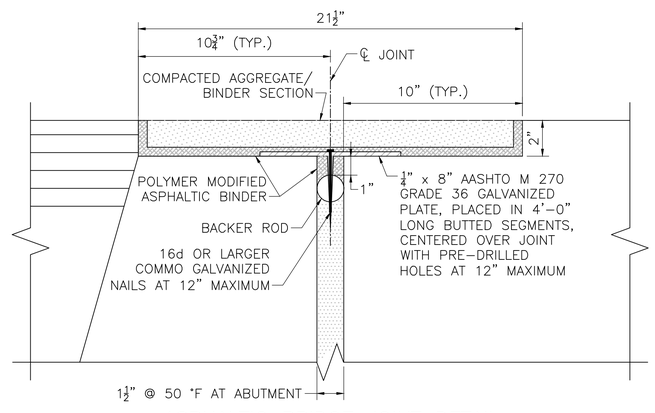

ASPHALTIC BRIDGE JOINT DETAIL

SCALE: 3" = 1'-0"

ABUTMENT NOTES:

1. MEMBRANE WATERPROOFING AND 8"x16"x2", 4000 PSI, ¾ IN., 610 CEMENT CONCRETE BLOCKS LAID IN MORTAR OR OTHER WATERPROOFING PROTECTIVE COURSE, MIN. 2" THICK AS SPECIFIED IN MHD STANDARD SPECIFICATIONS.
2. 4" ø WEEP HOLES 10'-0" O.C. (JUST ABOVE PROTECTIVE COURSE). PROVIDE 1 CUBIC YARD OF CRUSHED STONE AT EACH END OF WEEP HOLE.
3. ALL CONCRETE SHALL BE 4000 PSI, 1½ IN., 565 CEMENT CONCRETE, EXCEPT THE BACKWALL, WHICH SHALL BE 4000 PSI, ¾ IN., 610 CEMENT CONCRETE.
4. THE FACTORED BEARING PRESSURE = 4.87 KSF AS PER AASHTO LRFD BRIDGE DESIGN SPECIFICATIONS STRENGTH I LOAD COMBINATION.

   FACTORED BEARING RESISTANCE = 7.8 KSF. FACTORED BEARING RESISTANCE IS THE PRODUCT OF THE NOMINAL BEARING RESISTANCE AND A RESISTANCE FACTOR OF 0.45.

PATHWAY SECTION NOTES:

5. ALL REINFORCEMENT SHOWN IN THESE DETAILS SHALL BE COATED, EXCEPT FOR THE APPROACH SLAB REINFORCEMENT.
6. THE CONSTRUCTION JOINT LOCATED AT THE BRIDGE SEAT SHALL BE GIVEN A RAKE FINISH OF A ¼" MINIMUM AMPLITUDE.
7. TOP OF BACKWALL SHALL BE TROWELED SMOOTH PARALLEL TO THE PROFILE GRADE.
8. THE BACKWALL, KEEPER BLOCK, AND CURTAIN WALL CONCRETE MUST BE PLACED AND SUFFICIENTLY CURED PRIOR TO PLACING THE END DIAPHRAGM CONCRETE.
9. THE END DIAPHRAGM CONCRETE SHALL BE 4000 PSI, ¾ IN., 585 HP CEMENT CONCRETE AND SHALL BE PLACED MONOLITHICALLY WITH THE DECK.
10. PRIOR TO PLACING THE END DIAPHRAGM CONCRETE, CLOSED CELL FOAM OF THE SPECIFIED THICKNESSES SHALL BE ATTACHED WITH ADHESIVE TO ALL SURFACES OF THE BACKWALL, KEEPER BLOCK, AND CURTAIN WALL AS SHOWN ON THE PLANS. EXPANDED POLYSTYRENE FILLER SHALL BE PLACED UNDER THE BEAM BOTTOM FLANGE AND THE BOTTOM OF THE END DIAPHRAGM SHALL BE FORMED AS SPECIFIED. THE CONTRACTOR SHALL INSURE THAT ALL ABUTMENT CONCRETE IS PROPERLY LINED. END DIAPHRAGM CONCRETE MUST NOT COME IN DIRECT CONTACT WITH THE ABUTMENT CONCRETE.
11. AFTER THE END DIAPHRAGM HAS CURED SUFFICIENTLY, PLACE THE APPROACH SLAB CONCRETE AND BACKWALL CONCRETE AT SIDEWALK. THE BACKWALL TROUGH WILL BE FORMED WITH CLOSED CELL FOAM AND CARE SHALL BE TAKEN TO INSURE THAT CONCRETE DOES NOT ENTER THE TROUGH DRAINS.
12. COVER THE BACKWALL TROUGH OPENING SECURELY TO KEEP DEBRIS OUT UNTIL READY TO INSTALL THE ASPHALTIC BRIDGE JOINT.

APPROACH SLAB NOTES:

13. APPROACH SLAB CONCRETE SHALL BE 4000 PSI, 1½ IN., 565 CEMENT CONCRETE.
14. DRAPE MEMBRANE WATERPROOFING OVER CLOSED CELL FOAM BACKER ROD.
15. PROTECTIVE COURSE TO BE SUPERPAVE BRIDGE PROTECTIVE COARSE (SPC-B-12.5), PLACED IN 2" LAYERS AND COMPACTED WITH A MECHANICAL HAND-GUIDED TAMPER WITHIN 12 HOURS AFTER PLACING MEMBRANE WATERPROOFING.
16. PLACE TRANSVERSE REINFORCEMENT PARALLEL TO ABUTMENT.
17. PLACE LONGITUDINAL REINFORCEMENT, #7 @ 6" TOP & BOTTOM, PARALLEL TO ℄ COCHITUATE RAIL TRAIL.

ASPHALTIC BRIDGE JOINT NOTES:

18. MAINTAIN THE REQUIRED BLOCK-OUT WHILE PLACING CONCRETE.
19. CLEAN THE BLOCK-OUT TO REMOVE DELETERIOUS AND FOREIGN MATERIALS.
20. PLACE BACKER ROD, POLYMER MODIFIED BINDER AND STEEL PLATE SECURED IN PLACE WITH GALVANIZED NAILS.
21. COAT THE SURFACES OF THE BLOCK-OUT WITH THE POLYMER MODIFIED ASPHALTIC BINDER.
22. PLACE COMPACTED AGGREGATE/BINDER TO FILL ALL VOIDS AND OBTAIN A FINAL AND EVEN SURFACE WITH THE ADJACENT WEARING SURFACE.
23. IT IS NOT NECESSARY TO CONSTRUCT THE JOINT AT MEAN TEMPERATURE, HOWEVER, THE MANUFACTURER SHOULD BE CONSULTED FOR INSTALLATION GUIDELINES FOR EXTREME CLIMATE CONDITIONS.

*
BQX BR0

DATE	DESCRIPTION
SEPT. 8, 2018	ISSUED FOR CONSTRUCTION
USE ONLY PRINTS OF LATEST DATE	

607732_BR10(F07033).DWG Plotted on 20-Aug-2018 4:53 PM
Final Structural Submittal (SF) 08-September-2018

FRAMINGHAM/NATICK
COCHITUATE RAIL TRAIL

STATE	FED. AID PROJ. NO.	SHEET NO.	TOTAL SHEETS
MA	STP(TE)/TAP/CMQ-0035(206)	177	253
PROJECT FILE NO. 607732			

ABUTMENT DETAILS (2 OF 2)

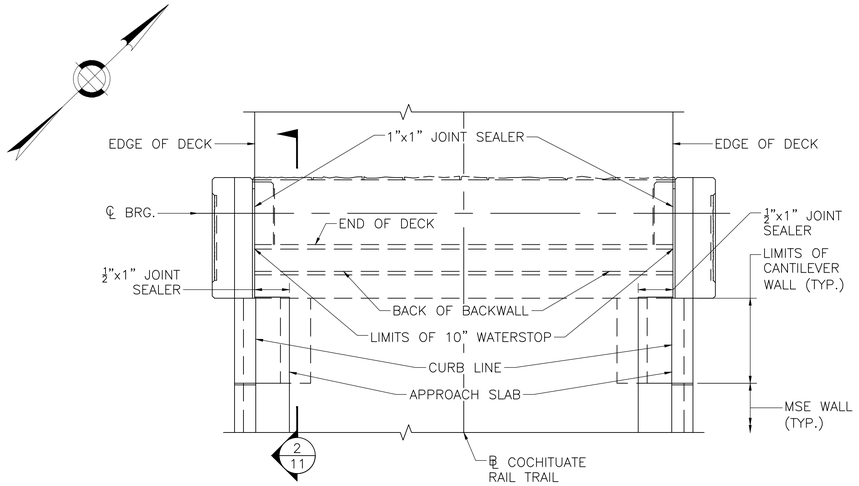

END OF DECK PLAN

SCALE: ⅜" = 1'-0"

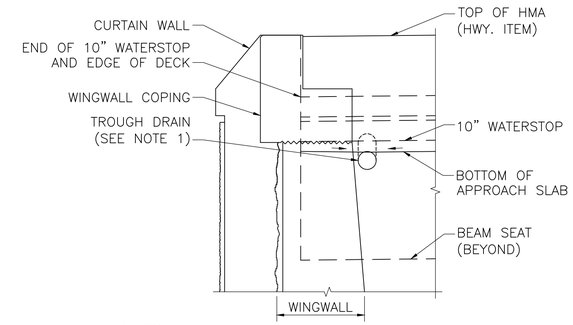

NOTES:

1. PROVIDE BACKWALL TROUGH DRAINS AT LOW POINTS.
2. SLOPE BACKWALL TROUGH UNDER WALKWAY 5% MIN. TOWARDS DRAIN.

END OF DECK ELEVATION

SCALE: ¾" = 1'-0"

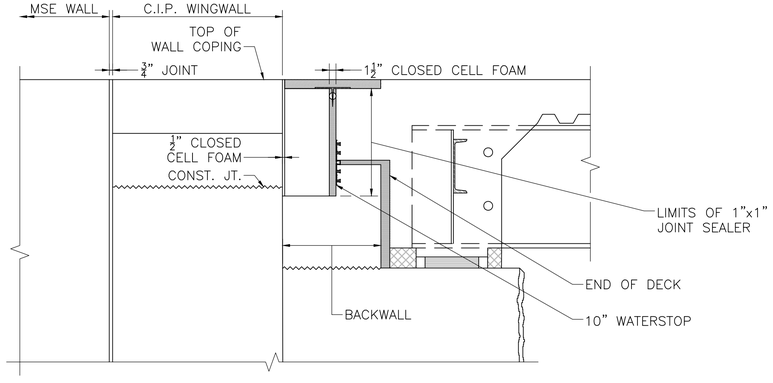

SECTION 2

SCALE: ¾" = 1'-0"

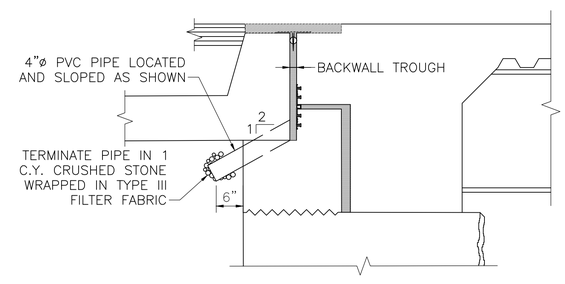

TROUGH DRAIN DETAILS

SCALE: ¾" = 1'-0"

*
BQX BR0

DATE	DESCRIPTION
SEPT. 8, 2018	ISSUED FOR CONSTRUCTION
USE ONLY PRINTS OF LATEST DATE	

607732_BR11(F07033).DWG Plotted on 20-Aug-2018 5:13 PM
Final Structural Submittal (SF) 08-September-2018

FRAMINGHAM/NATICK
COCHITUATE RAIL TRAIL

STATE	FED. AID PROJ. NO.	SHEET NO.	TOTAL SHEETS
MA	STP(TE)/TAP/CMQ-0035(206)	178	253
PROJECT FILE NO. 607732			

SUBSTRUCTURE DETAILS

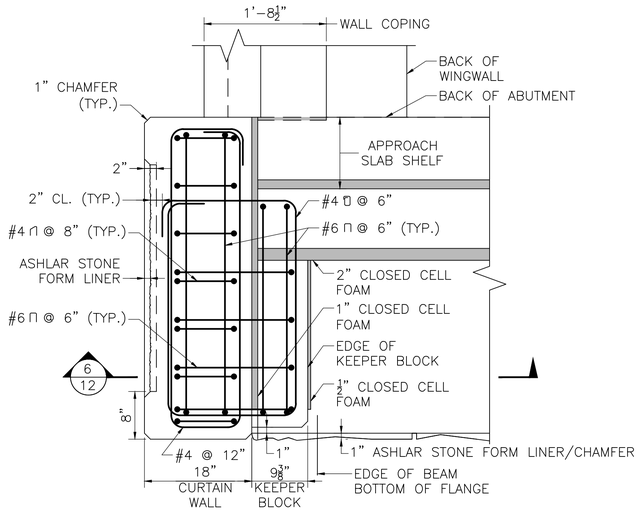

SECTION 3
SCALE: 1" = 1'-0"

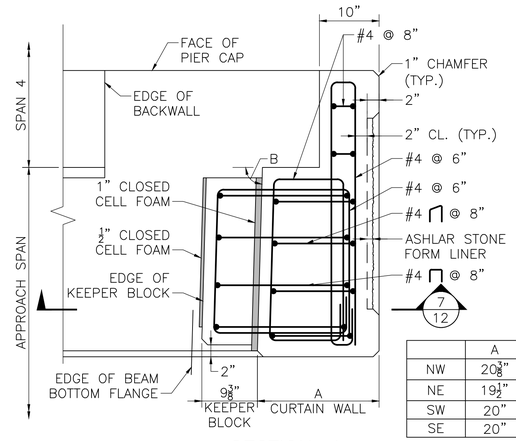

	A	B
NW	20⅜"	88°26'50"
NE	19½"	91°33'10"
SW	20"	90°0'0"
SE	20"	90°0'0"

SECTION 4
SCALE: 1" = 1'-0"

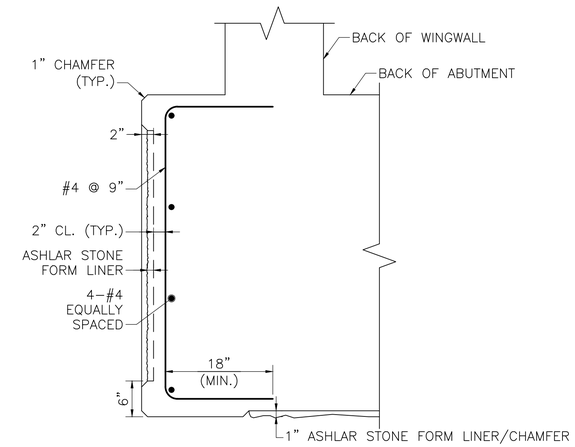

SECTION 5
SCALE: 1" = 1'-0"

KEEPER BLOCK NOTES:

1. KEEPER BLOCKS SHALL BE CAST BEFORE BEAMS ARE SET.
2. STEEL PLATES EMBEDDED IN KEEPER BLOCKS SHALL BE HOT-DIP GALVANIZED.

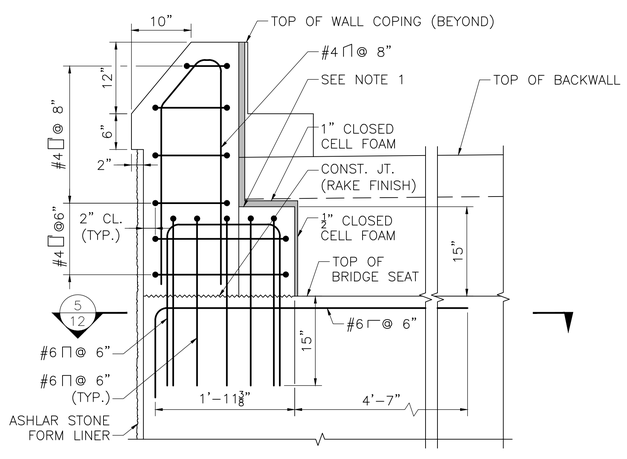

NOTES:

1. TOP OF KEEPER BLOCK SHALL BE TROWELED SMOOTH PARALLEL TO PROFILE GRADE
2. ABUTMENT REINFORCEMENT BELOW CONSTRUCTION JOINT HAS BEEN OMITTED FOR CLARITY.

SECTION 6
SCALE: 1" = 1'-0"

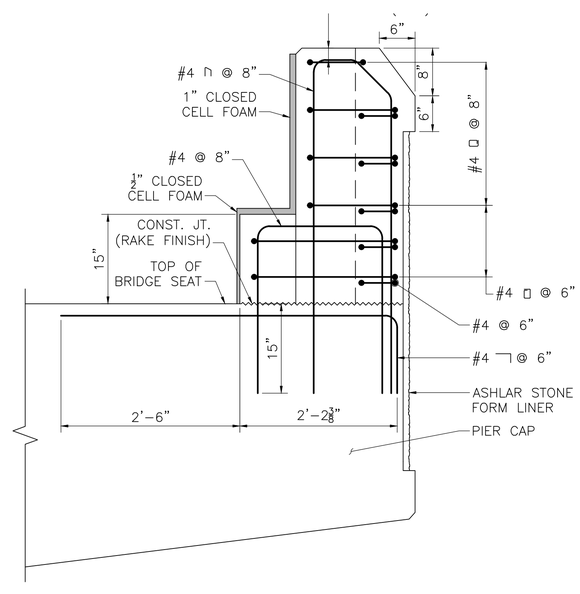

SECTION 7
SCALE: 1" = 1'-0"

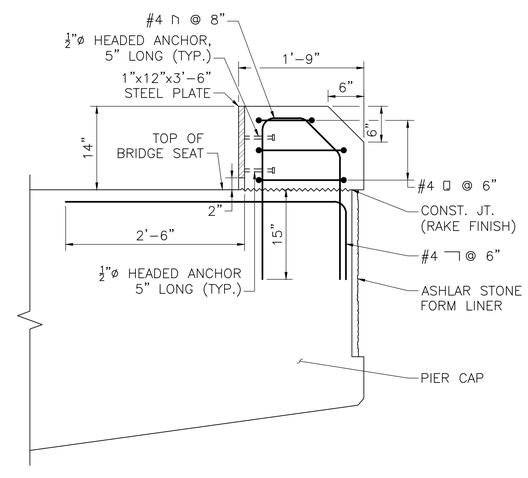

INTERMEDIATE PIER KEEPER BLOCK SECTION
SCALE: 1" = 1'-0"

*
BQX BR0

DATE	DESCRIPTION
SEPT. 8, 2018	ISSUED FOR CONSTRUCTION
USE ONLY PRINTS OF LATEST DATE	

607732_BR12(F07033).DWG Plotted on 20-Aug-2018 5:12 PM
Final Structural Submittal (SF) 08-September-2018

FRAMINGHAM/NATICK
COCHITUATE RAIL TRAIL

STATE	FED. AID PROJ. NO.	SHEET NO.	TOTAL SHEETS
MA	STP(TE)/TAP/CMQ-003S(206)	179	253
PROJECT FILE NO. 607732			

PIER DETAILS (1 OF 2)

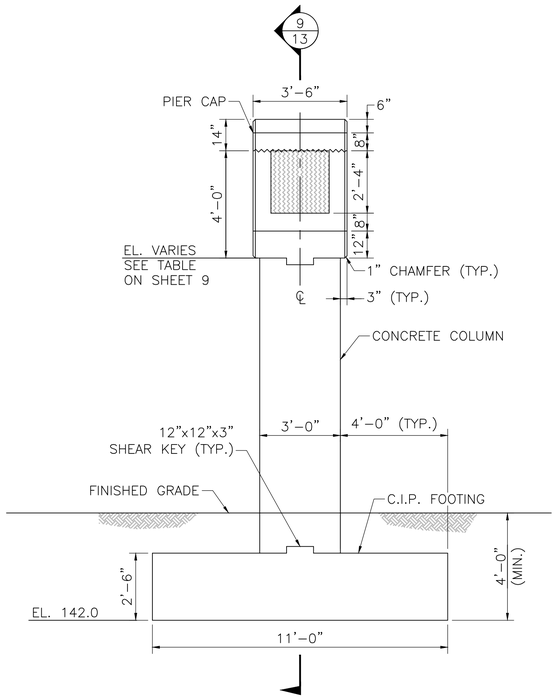

INTERMEDIATE PIER SIDE ELEVATION

SCALE: $\frac{3}{8}$" = 1'-0"

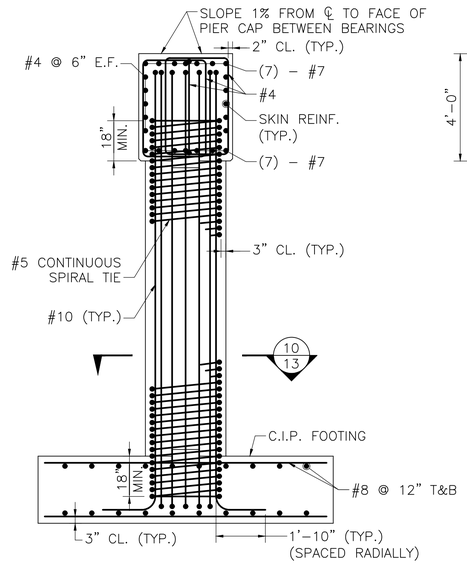

SECTION 8

SCALE: $\frac{3}{8}$" = 1'-0"

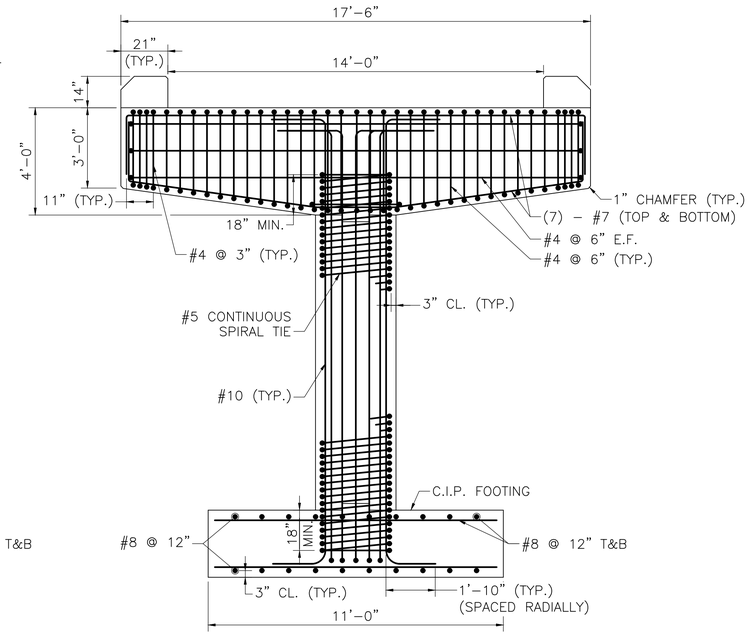

SECTION 9

SCALE: $\frac{3}{8}$" = 1'-0"

PIER NOTES:

1. ALL REINFORCEMENT SHOWN IN THIS DETAIL SHALL BE EPOXY COATED.
2. THE FACTORED BEARING PRESSURE = 6.0 KSF AS PER AASHTO LRFD BRIDGE DESIGN SPECIFICATIONS STRENGTH I LOAD COMBINATION.

   FACTORED BEARING RESISTANCE = 9.8 KSF. FACTORED BEARING RESISTANCE IS THE PRODUCT OF THE NOMINAL BEARING RESISTANCE AND A RESISTANCE FACTOR OF 0.45.
3. ALL CONCRETE SHALL BE 4000 PSI, $\frac{3}{4}$ IN., 585 HP CEMENT CONCRETE EXCEPT THE CURTAIN WALL AND FOOTINGS.
4. ALL KEEPER BLOCK CONCRETE ABOVE THE CONSTRUCTION JOINT LOCATED AT THE BRIDGE SEAT SHALL BE 4000 PSI, $\frac{3}{4}$ IN., 610 CEMENT CONCRETE. THE CONSTRUCTION JOINT SHALL BE GIVEN A RAKE FINISH WITH A $\frac{1}{4}$" MINIMUM AMPLITUDE.
5. FOOTING CONCRETE SHALL BE 4000 PSI, $1\frac{1}{2}$ IN., 565 CEMENT CONCRETE.

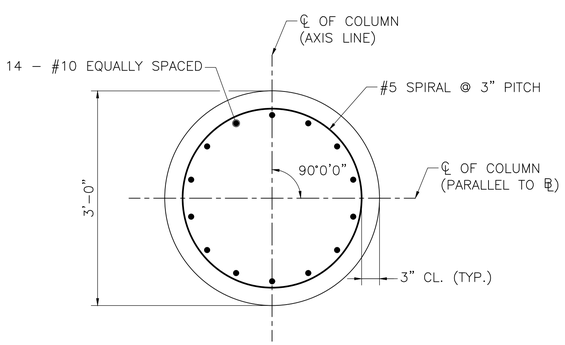

SECTION 10

SCALE: 1" = 1'-0"

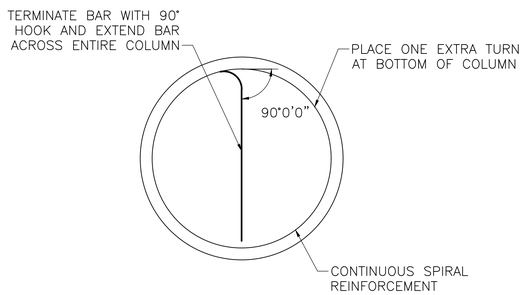

NOTE:
COLUMN VERTICAL REINFORCEMENT NOT SHOWN FOR CLARITY

SPIRAL REINFORCEMENT TERMINATION DETAIL

SCALE: 1" = 1'-0"

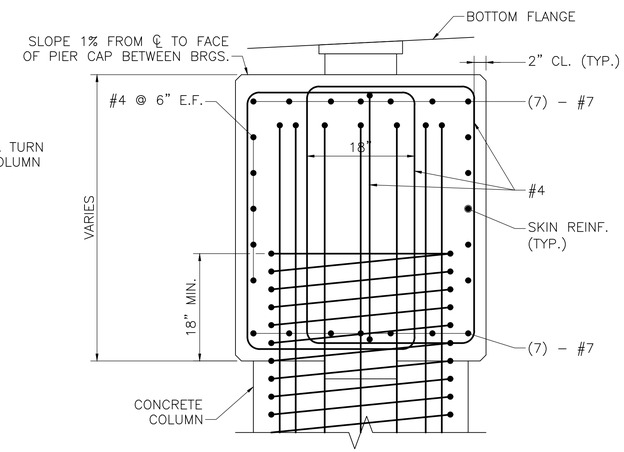

DETAILS AT INTERMEDIATE PIER

SCALE: 1" = 1'-0"

* BQX BR0	
SEPT. 8, 2018	ISSUED FOR CONSTRUCTION
DATE	DESCRIPTION
USE ONLY PRINTS OF LATEST DATE	

607732_BR13(F07033).DWG Plotted on 20-Aug-2018 5:12 PM
Final Structural Submittal (SF) 08-September-2018

FRAMINGHAM/NATICK
COCHITUATE RAIL TRAIL

STATE	FED. AID PROJ. NO.	SHEET NO.	TOTAL SHEETS
MA	STP(TE)/TAP/CMQ-0035(206)	180	253
PROJECT FILE NO. 607732			

PIER DETAILS (2 OF 2)

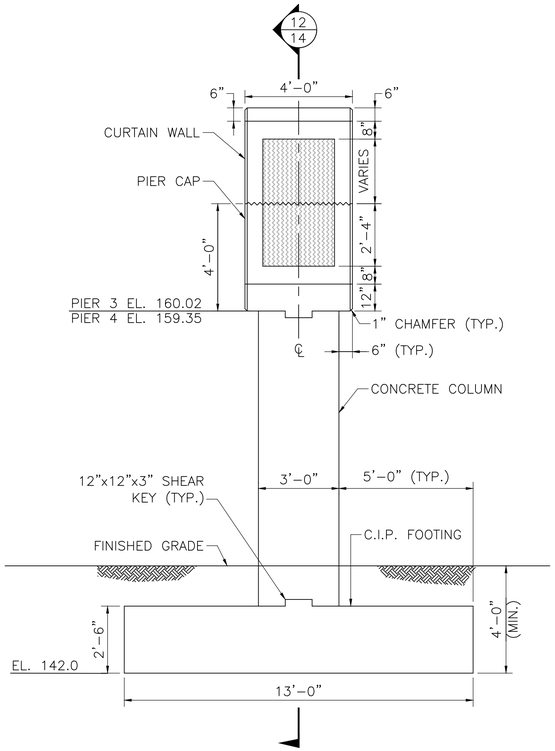

PIERS 3 AND 4 SIDE ELEVATION

SCALE: $\frac{3}{8}$" = 1'-0"

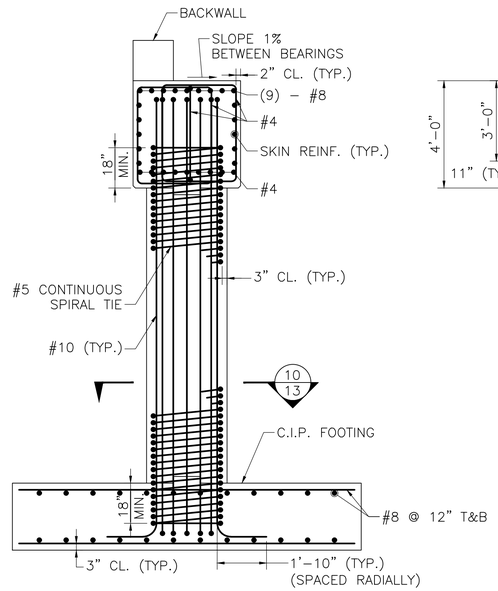

SECTION 11

SCALE: $\frac{3}{8}$" = 1'-0"

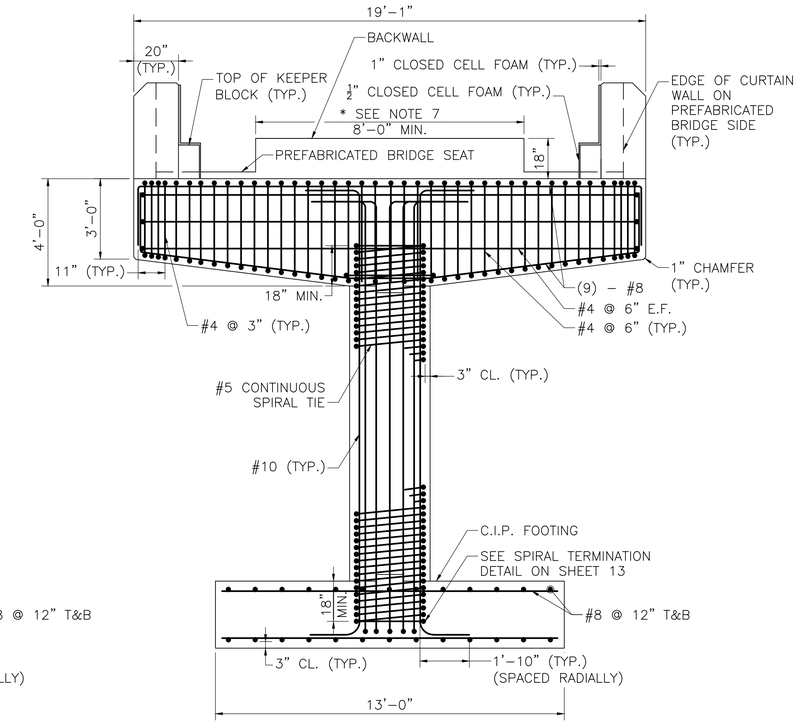

SECTION 12

SCALE: $\frac{3}{8}$" = 1'-0"

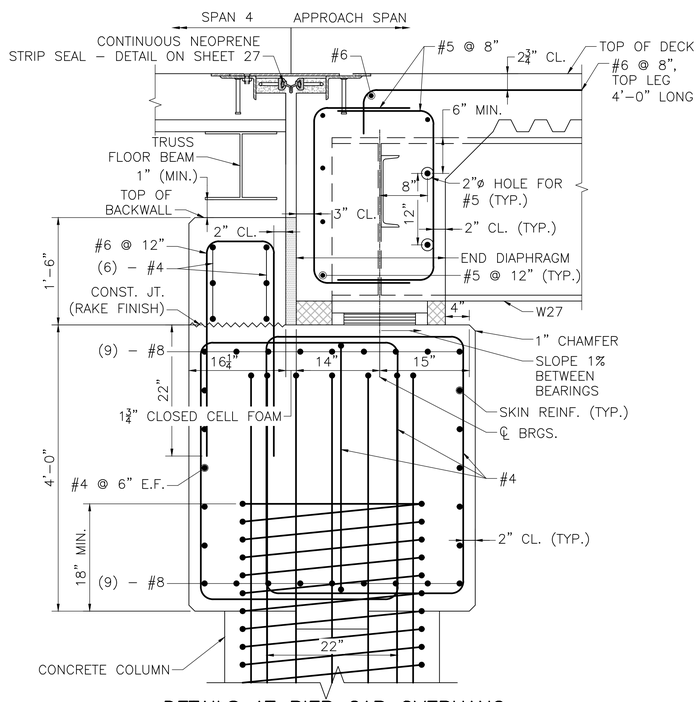

DETAILS AT PIER CAP OVERHANG

SCALE: 1" = 1'-0"

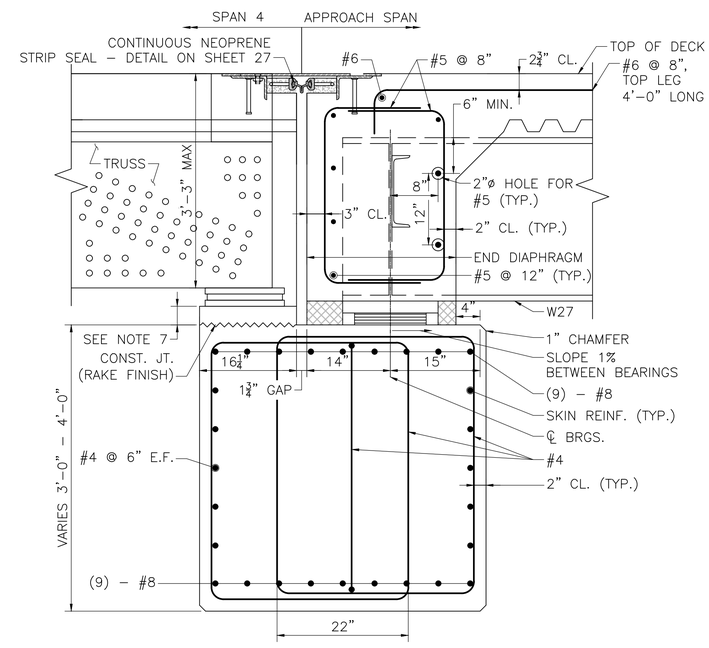

DETAILS AT PIER CAP OVERHANG

SCALE: 1" = 1'-0"

PIER NOTES:

1. ALL REINFORCEMENT SHOWN IN THIS DETAIL SHALL BE EPOXY COATED.
2. THE FACTORED BEARING PRESSURE = 4.45 KSF AS PER AASHTO LRFD BRIDGE DESIGN SPECIFICATIONS STRENGTH I LOAD COMBINATION.

   FACTORED BEARING RESISTANCE = 10.3 KSF. FACTORED BEARING RESISTANCE IS THE PRODUCT OF THE NOMINAL BEARING RESISTANCE AND A RESISTANCE FACTOR OF 0.45.
3. ALL CONCRETE SHALL BE 4000 PSI, $\frac{3}{4}$ IN., 585 HP CEMENT CONCRETE EXCEPT THE BACKWALL, CURTAIN WALLS, KEEPER BLOCKS, AND FOOTINGS.
4. ALL BACKWALL, CURTAIN WALL, AND KEEPER BLOCK CONCRETE ABOVE THE CONSTRUCTION JOINT LOCATED AT THE BRIDGE SEAT SHALL BE 4000 PSI, $\frac{3}{4}$ IN., 610 CEMENT CONCRETE. THE CONSTRUCTION JOINT SHALL BE GIVEN A RAKE FINISH WITH A $\frac{1}{4}$" MINIMUM AMPLITUDE.
5. FOOTING CONCRETE SHALL BE 4000 PSI, $1\frac{1}{2}$ IN., 565 CEMENT CONCRETE.
6. TOP OF BACKWALL SHALL BE TROWELED SMOOTH PARALLEL TO THE PROFILE GRADE.
7. CONTRACTOR TO COORDINATE LENGTH OF BACKWALL AND ELEVATION OF BRIDGE SEAT WITH PREFABRICATED BRIDGE MANUFACTURER, PRIOR TO CONSTRUCTION. PROVIDE PEDESTAL REINFORCEMENT FOR PEDESTALS GREATER THAN 4 INCHES.
8. ANCHOR BOLTS, NUTS, AND WASHERS SHALL CONFORM TO ASTM F 1554 GRADE 105 AND SHALL BE HOT-DIP GALVANIZED IN ACCORDANCE WITH AASHTO M 232.
9. CONTRACTOR TO COORDINATE SIZE AND CONFIGURATION OF BEARING ASSEMBLY AND ANCHORAGE WITH PREFABRICATED BRIDGE MANUFACTURER. BEARING ASSEMBLY AND ANCHORAGE MUST BE SUBMITTED TO THE ENGINEER FOR APPROVAL PRIOR TO INSTALLATION.
10. PREFABRICATED BRIDGE BEARING ASSEMBLY TO BE DESIGNED IN ACCORDANCE WITH THE 2014 AMERICAN ASSOCIATION OF STATE HIGHWAY AND TRANSPORTATION OFFICIALS LRFD BRIDGE DESIGN SPECIFICATIONS WITH CURRENT INTERIM SPECIFICATIONS THROUGH 2017.
11. BACKWALL WILL BE DETERMINED BY THE DEPTH OF BEAM SEAT BUT NOT LESS THAN 18". COORDINATE WITH PREFABRICATED BRIDGE MANUFACTURER.
12. TOTAL BEAM SEAT WIDTH SHALL BE EQUAL TO PREFABRICATED BRIDGE OUT-TO-OUT WIDTH + 2". CONTRACTOR TO COORDINATE OUT-TO-OUT WIDTH W/ PREFABRICATED BRIDGE MANUFACTURER.
13. CONTRACTOR TO COORDINATE LENGTH OF PREFABRICATED BRIDGE BEHIND BEARING ℄ W/ MANUFACTURER PRIOR CONSTRUCTION.

*
BQX BR0

DATE	DESCRIPTION
SEPT. 8, 2018	ISSUED FOR CONSTRUCTION
USE ONLY PRINTS OF LATEST DATE	

607732_BR14(F07033).DWG Plotted on 20-Aug-2018 5:11 PM
Final Structural Submittal (SF) 08-September-2018

FRAMINGHAM/NATICK
COCHITUATE RAIL TRAIL

STATE	FED. AID PROJ. NO.	SHEET NO.	TOTAL SHEETS
MA	STP(TE)/TAP/CMQ-0035(206)	181	253
PROJECT FILE NO. 607732			

NORTH MSE WALL PLAN AND ELEVATION

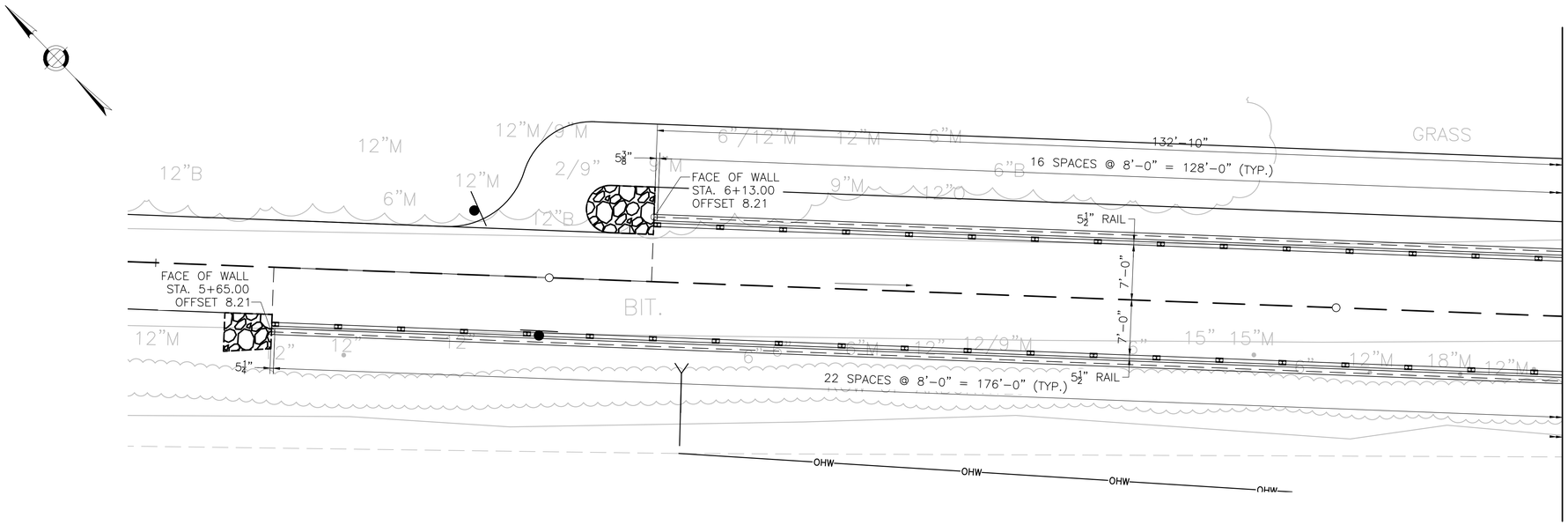

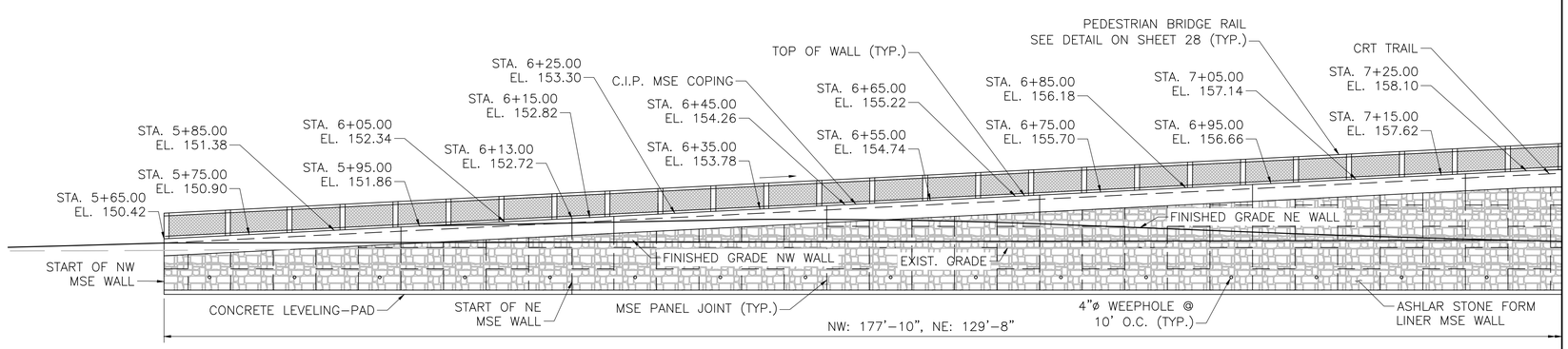

NORTH MSE WALL ELEVATION

SCALE: 1/8" = 1'-0"

*
BQX
BR0

DATE	DESCRIPTION
SEPT. 8, 2018	ISSUED FOR CONSTRUCTION
USE ONLY PRINTS OF LATEST DATE	

607732_BR15(F07033).DWG Plotted on 20-Aug-2018 5:11 PM
Final Structural Submittal (SF) 08-September-2018

FRAMINGHAM/NATICK
COCHITUATE RAIL TRAIL

STATE	FED. AID PROJ. NO.	SHEET NO.	TOTAL SHEETS
MA	STP(TE)/TAP/CMQ-0035(206)	182	253
PROJECT FILE NO. 607732			

SOUTH MSE WALL PLAN AND ELEVATION

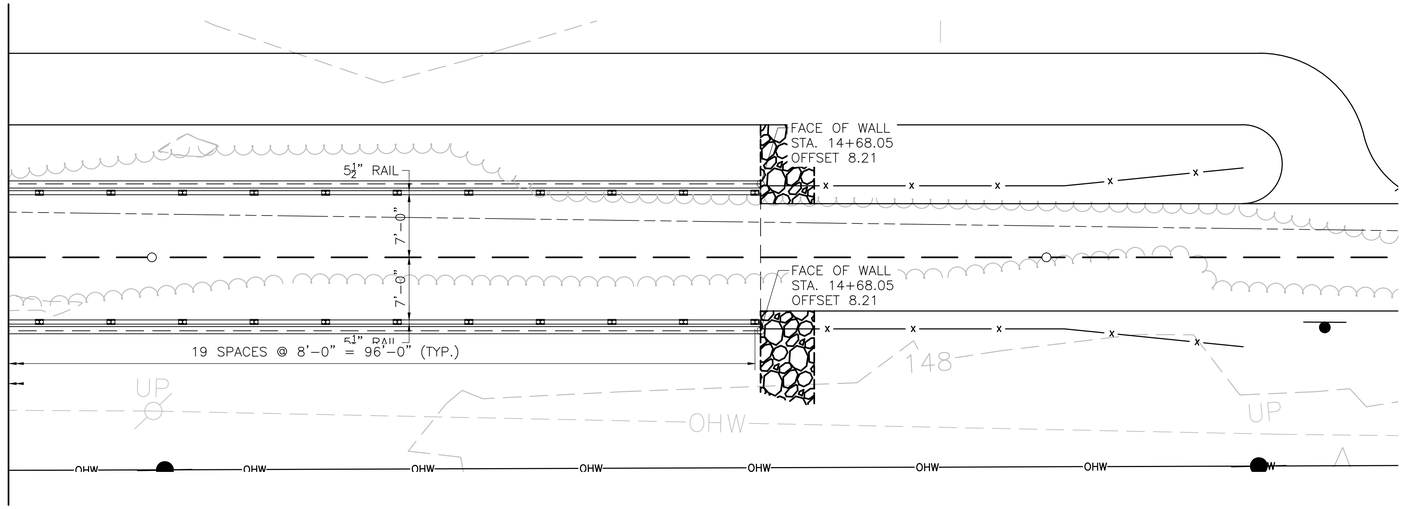

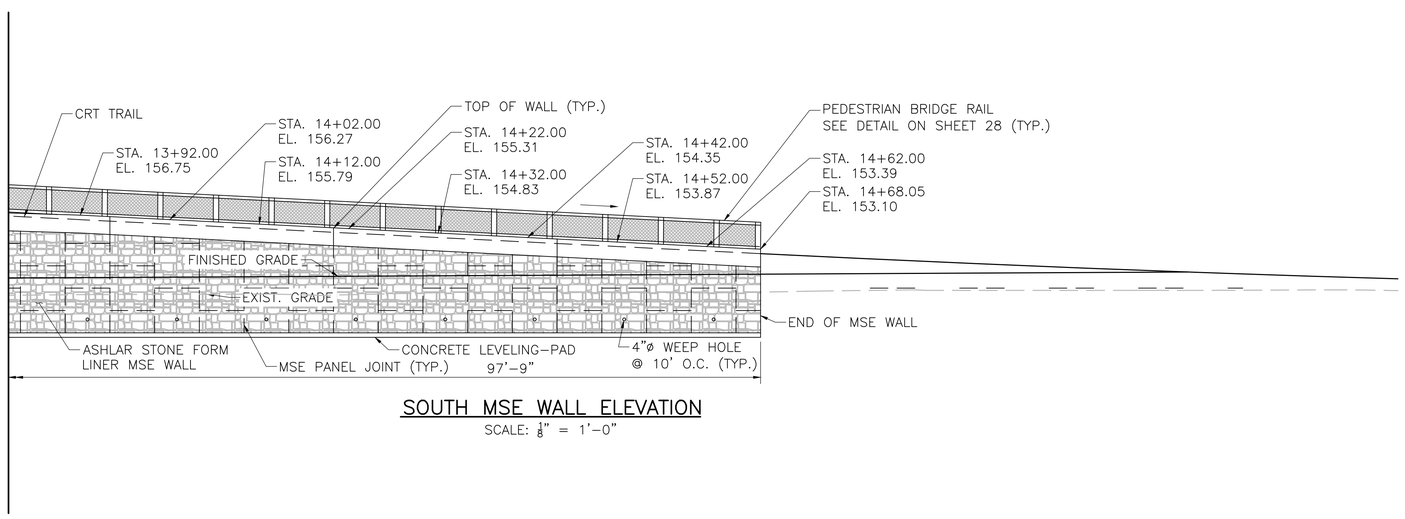

SOUTH MSE WALL ELEVATION

SCALE: ⅛" = 1'-0"

*
BQX
BR0

DATE	DESCRIPTION
SEPT. 8, 2018	ISSUED FOR CONSTRUCTION
USE ONLY PRINTS OF LATEST DATE	

607732_BR16(F07033).DWG Plotted on 20-Aug-2018 5:10 PM
Final Structural Submittal (SF) 08-September-2018

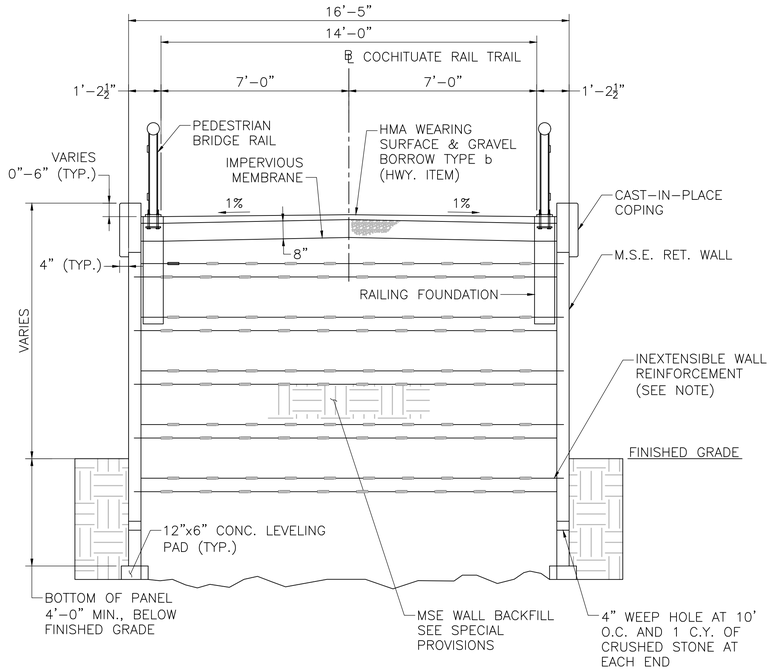

TYPICAL APPROACH SECTION (LOOKING UP STATION)

SCALE: ¼" = 1'-0"

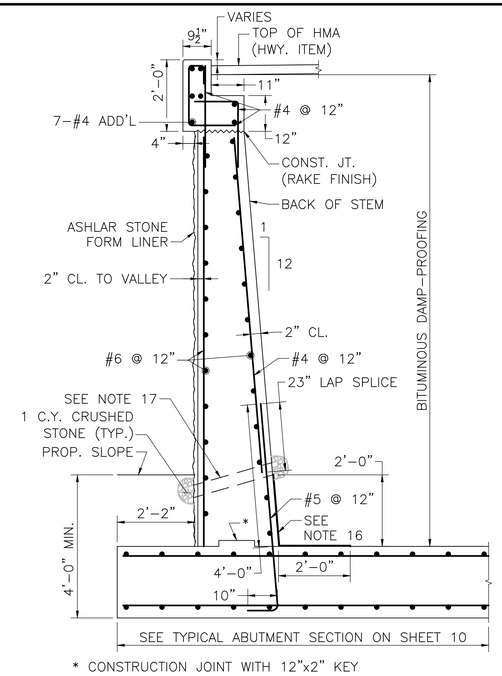

* CONSTRUCTION JOINT WITH 12"x2" KEY

CANTILEVER WALL SECTION

SCALE: ½" = 1'-0"

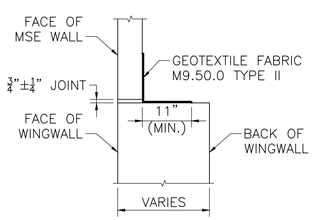

MSE JOINT AT WINGWALL

SCALE: ¾" = 1'-0"

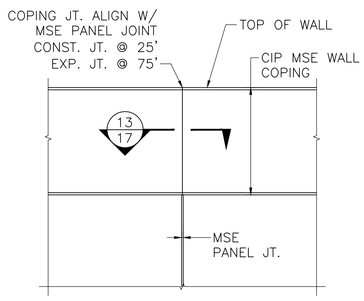

MSE COPING JOINT

SCALE: ¾" = 1'-0"

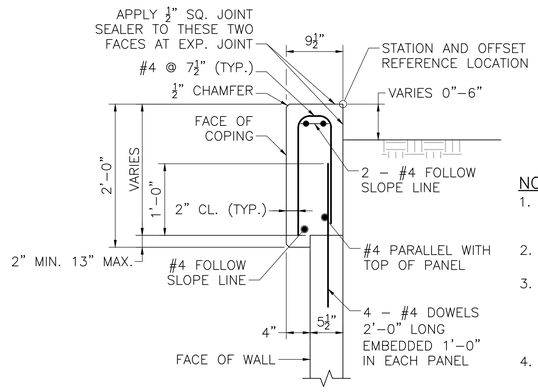

NOTES:

1. CAP CONCRETE SHALL BE 4000 PSI, ¾ IN., 585 HP CEMENT CONCRETE.
2. ALL LONGITUDINAL BARS ARE #4.
3. EXPANSION JOINTS ½", PREFORMED JOINT FILLER WITH ½" SQ. JOINT SEALER SHALL BE AT EVERY 2 PANEL UNITS.
4. REVEAL ALONG WALL SHALL BE 6" AND TRANSITION TO 0" AT BACK OF ABUTMENT.

CAST-IN-PLACE WALL COPING DETAIL

SCALE: 1" = 1'-0"

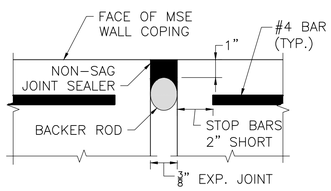

[EXPANSION JOINT]

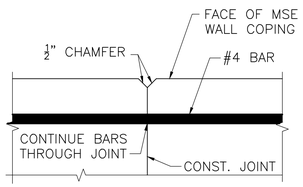

[CONSTRUCTION JOINT]

SECTION 13

SCALE: 3" = 1'-0"

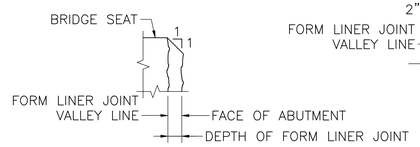

DETAIL AT BRIDGE SEAT

SCALE: 3" = 1'-0"

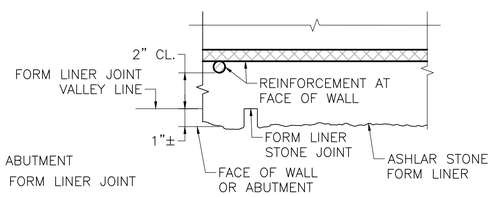

TYPICAL STRIATION DETAIL

SCALE: 3" = 1'-0"

FRAMINGHAM/NATICK
COCHITUATE RAIL TRAIL

STATE	FED. AID PROJ. NO.	SHEET NO.	TOTAL SHEETS
MA	STP(TE)/TAP/CMQ-0035(206)	183	253
PROJECT FILE NO. 607732			

MSE WALL AND MISCELLANEOUS DETAILS

MSE WALL NOTES:

1. RETAINING WALL SHALL BE A MECHANICALLY STABILIZED EARTH (MSE) WALL.
2. ACTUAL LENGTH OF STEEL STRIP REINFORCING DEPENDS ON WALL SUPPLIER'S DESIGN. SEE TYPICAL SECTION.
3. MSE PRECAST CONCRETE FACING PANELS SHALL HAVE A RECTANGULAR SHAPE (APPROXIMATELY 5'x5').
4. CONCRETE TREATMENT ON THE WALLS SHALL BE FINISHED WITH A ASHLAR STONE PATTERN.
5. THE MSE WALL COMPANY SHALL BE RESPONSIBLE FOR THE DESIGN OF THE INTERNAL STABILITY OF THE SELECTED MSE RETAINING WALL SYSTEM. THE MSE WALL COMPANY SHALL SUBMIT MSE RETAINING WALL PLANS AND CALCULATIONS PREPARED BY A MASSACHUSETTS LICENSED PROFESSIONAL ENGINEER AND BEAR THE ENGINEER'S SEAL.
6. THE MSE WALL SHALL BE DESIGNED TO RESIST ADDITIONAL LOAD INDUCED BY THE ABUTMENT. SEE ABUTMENT NOTES ON SHEET 10 FOR BEARING PRESSURES.
7. DESIGN, FABRICATION AND CONSTRUCTION OF THE MSE RETAINING WALL, INCLUDING LEVELING PAD, PANELS AND COPINGS SHALL BE IN ACCORDANCE. WITH THE SPECIAL PROVISIONS ITEM 996.31.
8. THE CONTRACTOR SHALL LAY OUT THE MSE SOIL REINFORCING STRIPS TO PREVENT CONFLICTS WITH APPROACH BIKE RAIL POSTS. REINFORCING STRIPS SHALL BE LAID OUT ACCORDING TO MANUFACTURER'S DESIGN PLANS AND SPECIFICATIONS.
9. REINFORCEMENT IN THE MSE WALL CAP SHALL HAVE 2" MINIMUM CLEAR COVER FOR CAST-IN-PLACE ELEMENTS AND 1½" MINIMUM CLEAR COVER FOR PRECAST ELEMENTS.
10. THE CONTRACTOR SHALL FILL ALL LIFTING DEVICE RECESSES IN THE PRECAST UNITS WITH NON-SHRINK GROUT AFTER INSTALLATION USING A COLOR THAT MATCHES THE CONCRETE.
11. BOTTOM OF MSE WALL BEARING ON NATURAL SAND LAYER OR ON GRAVEL BORROW (MHD M1.03.0 TYPE B) IN ACCORDANCE WITH THE SPECIAL PROVISIONS ITEM 996.31.
12. REINFORCED CONCRETE LEVELING PAD SHALL BE CONSTRUCTED IN ACCORDANCE WITH MANUFACTURER'S REQUIREMENTS AND SPECIAL PROVISIONS ITEM 996.31.
13. ONE OR MORE QUALIFIED CIVIL ENGINEERS REPRESENTING THE MSE WALL MANUFACTURER SHALL BE ON SITE AT THE START OF CONSTRUCTION OF EACH WALL IN ACCORDANCE WITH SPECIAL PROVISIONS ITEM 996.31.
14. THE MSE WALLS SHALL BE DIMENSIONED SO THAT THE MAXIMUM BEARING PRESSURE DOES NOT EXCEED A FACTORED STRENGTH I BEARING RESISTANCE OF 7.5 KSF WHICH IS THE PRODUCT OF THE NOMINAL BEARING RESISTANCE AND A RESISTANCE FACTOR OF 0.65.
15. THE PEDESTRIAN RAILING LOAD APPLIED TO THE WALL SHALL BE A LATERAL AND VERTICAL LIVE LOAD OF 0.05 KLF ALONG THE TOP RAIL. IN ADDITION A CONCENTRATED LATERAL LIVE LOAD OF 0.20 KIPS SHALL BE PLACED SIMULTANEOUSLY WITH THE LOAD LISTED ABOVE.

CANTILEVER WALL NOTES

16. MEMBRANE WATERPROOFING AND 8"x16"x2", 4000 PSI, ¾ IN., 610 CEMENT CONCRETE BLOCKS LAID IN MORTAR OR OTHER WATERPROOFING PROTECTIVE COURSE, MIN. 2" THICK AS SPECIFIED IN MHD STANDARD SPECIFICATIONS.
17. 4" ø WEEP HOLES 10'-0" O.C. (JUST ABOVE PROTECTIVE COURSE). PROVIDE 1 CUBIC YARD OF CRUSHED STONE AT EACH END OF WEEP HOLE.
18. ALL CONCRETE BELOW THE CONSTRUCTION JOINT SHALL BE 4000 PSI, 1½ IN., 565 CEMENT CONCRETE.
19. COPING CONCRETE SHALL BE 4000 PSI, ¾ IN., 585 HP CEMENT CONCRETE.

FORM LINER NOTES:

20. THE CONTRACTOR SHALL MAKE SURE THAT THE FORM LINERS ARE PLUMB AND LINED UP VERTICALLY FROM PANEL TO PANEL FOR THE FULL HEIGHT OF THE WALL.

*
BQX BR0

DATE	DESCRIPTION
SEPT. 8, 2018	ISSUED FOR CONSTRUCTION
USE ONLY PRINTS OF LATEST DATE	

607732_BR17(F07033).DWG Plotted on 20-Aug-2018 5:10 PM
Final Structural Submittal (SF) 08-September-2018

FRAMINGHAM/NATICK
COCHITUATE RAIL TRAIL

STATE	FED. AID PROJ. NO.	SHEET NO.	TOTAL SHEETS
MA	STP(TE)/TAP/CMQ-0035(206)	184	253
PROJECT FILE NO. 607732			

NORTH APPROACH FRAMING PLAN

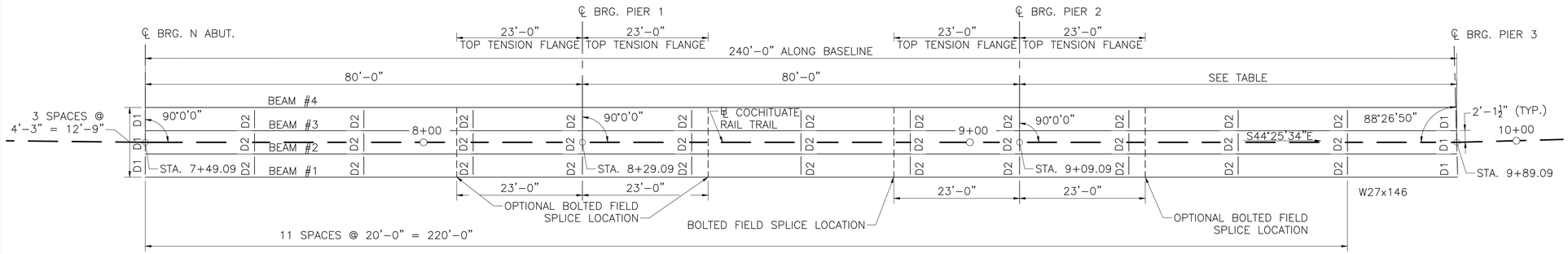

NORTH APPROACH FRAMING PLAN

SCALE: $\frac{3}{32}$" = 1'-0"

	SPAN 3 BEAM LENGTH
BEAM #4	79'-9⅞"
BEAM #3	79'-11¼"
BEAM #2	80'-0¾"
BEAM #1	80'-2⅛"

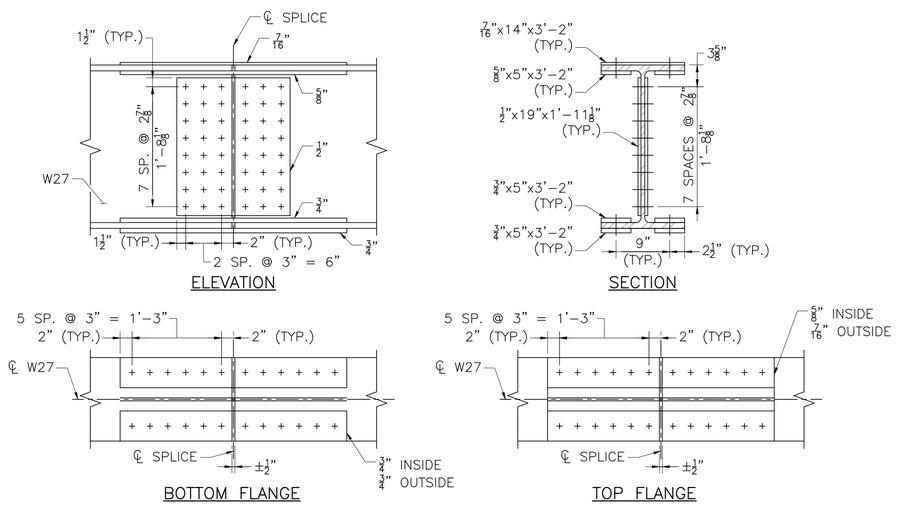

BOLTED FIELD SPLICE DETAILS

SCALE: 1" = 1'-0"

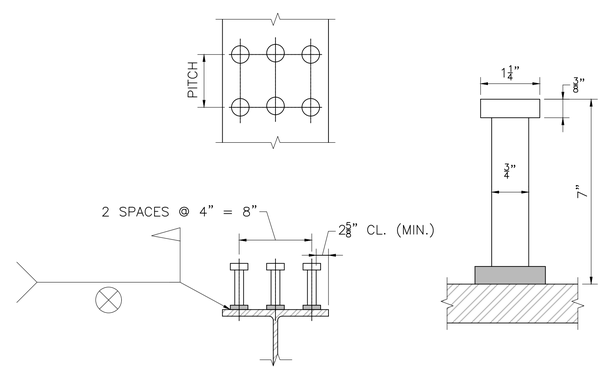

STUD SHEAR CONNECTORS

NOT TO SCALE

FRAMING PLAN NOTES:

1. D1 = C12x20.7 (TYP. END DIAPHRAGM)
   D2 = C15x33.9 (TYP. INTERMEDIATE DIAPHRAGM)
2. SEE SHEET 20 FOR DIAPHRAGM DETAILS.
3. THE MAIN LOAD CARRYING MEMBERS (BEAM #1–#4) ARE W27x146.
4. ALL STEEL SHALL CONFORM TO AASHTO M 270 GRADE 50.
5. ALL MAIN LOAD CARRYING MEMBERS, END DIAPHRAGMS AND INTERMEDIATE DIAPHRAGMS SHALL BE HOT DIP GALVANIZED TO CONFORM TO AASHTO–M111, AND PAINTED DARK BRONZE (FEDERAL STD. 595B COLOR NO. 10045), UNLESS OTHERWISE SHOWN ON THE PLANS.
6. GALVANIZED MEMBERS THAT ARE TO BE WELDED AFTER GALVANIZING SHALL BE MASKED 1 INCH ON EITHER SIDE OF THE WELD LINE PRIOR TO GALVANIZING. THE TOP OF THE TOP FLANGE MAY BE MASKED FOR ITS FULL WIDTH AND LENGTH. 1
7. ALL BEARING STIFFENERS AND CONNECTION PLATES SHALL BE PLUMB.
8. THE ENDS OF ALL BEAMS SHALL BE FABRICATED SO THAT UNDER FULL DEAD LOAD THE ENDS WILL BE PLUMB.
9. ALL INTERMEDIATE CONNECTION PLATES SHALL BE PERPENDICULAR TO THE WEBB AND TO THE BEAM FLANGES.

BOLTED FIELD SPLICE NOTES:

10. BOLTED FIELD SPLICES SHALL BE CONSIDERED SLIP CRITICAL CONNECTIONS WITH CLASS C FAYING SURFACES.
11. + DENOTES ⅞"ø AASHTO M 164 HIGH STRENGTH BOLT IN $\frac{15}{16}$"ø HOLE.
12. ONE ROW OF STUD SHEAR CONNECTORS SHALL BE PLACED ALONG THE CENTERLINE OF THE TOP FLANGE SPLICE PLATE

SHEAR STUD NOTE:

13. ⅞"ø STUDS MAY BE SUBSTITUTED FOR ¾"ø STUDS BY ADJUSTING THE PITCH TO PROVIDE AN EQUIVALENT CROSS–SECTIONAL AREA PER FOOT.

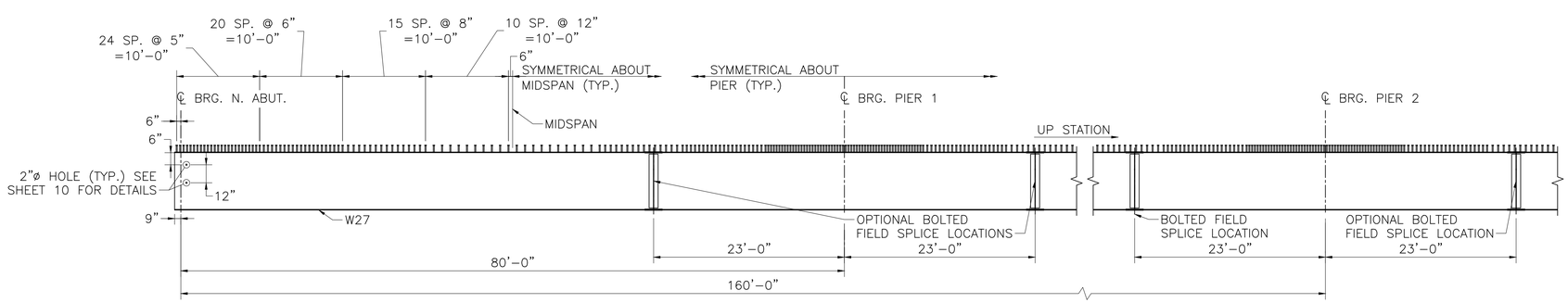

NORTH APPROACH BEAM ELEVATION

NOT TO SCALE

*
BQX BR0

DATE	DESCRIPTION
NOV. 16, 2018	1 ADDENDUM 2 NOTE 6 REVISED
SEPT. 8, 2018	ISSUED FOR CONSTRUCTION
USE ONLY PRINTS OF LATEST DATE	

607732_BR18(F07033).DWG Plotted on 15-Nov-2018 9:35 AM
Final Structural Submittal (SF) 08-September-2018

FRAMINGHAM/NATICK
COCHITUATE RAIL TRAIL

STATE	FED. AID PROJ. NO.	SHEET NO.	TOTAL SHEETS
MA	STP(TE)/TAP/CMQ-0035(206)	185	253
PROJECT FILE NO. 607732			

SOUTH APPROACH FRAMING PLAN

FRAMING PLAN NOTES:

1. SEE NOTES ON SHEET 18.

BOLTED FIELD SPLICE NOTES:

2. SEE NOTES ON SHEET 18.

SHEAR STUD NOTES:

3. SEE NOTES ON SHEET 18.

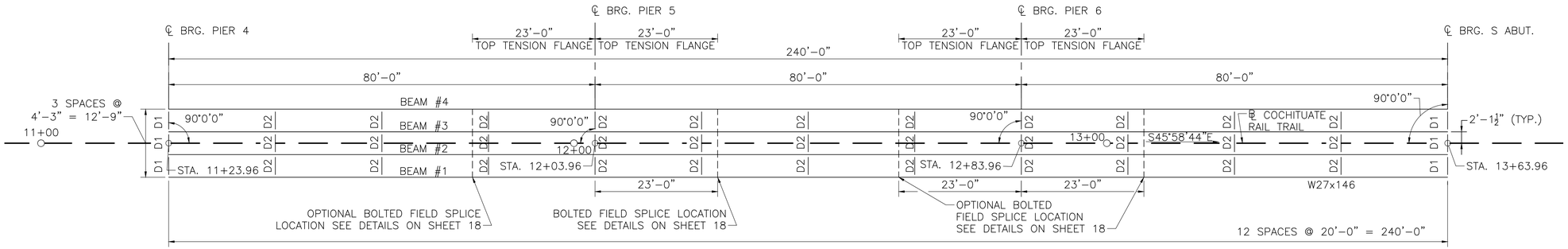

SOUTH APPROACH FRAMING PLAN

SCALE: $\frac{3}{32}$" = 1'-0"

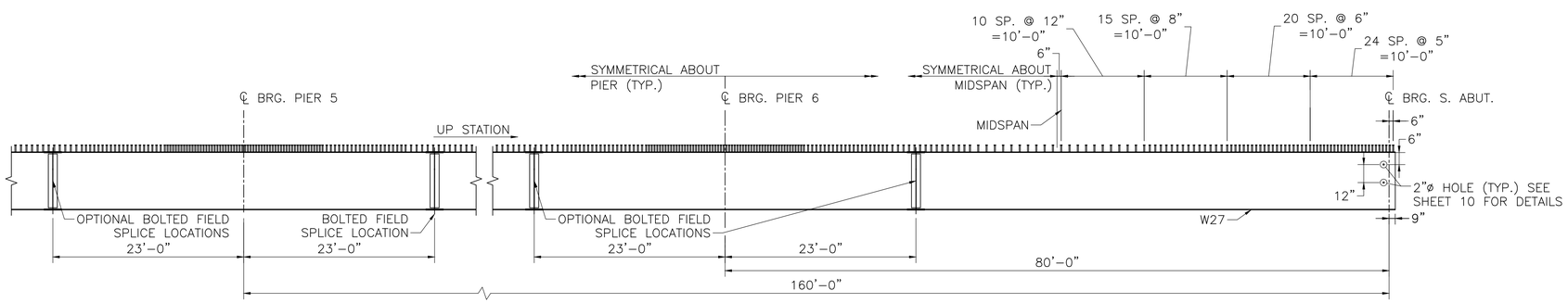

SOUTH APPROACH BEAM ELEVATION

NOT TO SCALE

*
BQX BR0

DATE	DESCRIPTION
SEPT. 8, 2018	ISSUED FOR CONSTRUCTION
USE ONLY PRINTS OF LATEST DATE	

607732_BR19(F07033).DWG Plotted on 20-Aug-2018 5:10 PM
Final Structural Submittal (SF) 08-September-2018

FRAMINGHAM/NATICK
COCHITUATE RAIL TRAIL

STATE	FED. AID PROJ. NO.	SHEET NO.	TOTAL SHEETS
MA	STP(TE)/TAP/CMQ-003S(206)	186	253
PROJECT FILE NO. 607732			

STEEL DETAILS

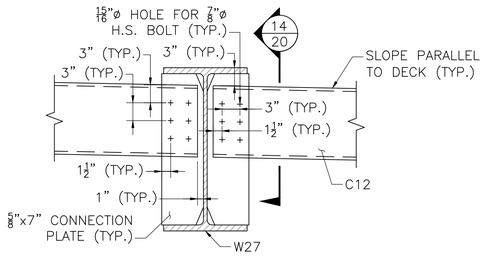

ELEVATION VIEW

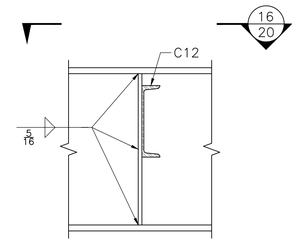

NOTE:
1. SEE CLIP DETAIL ON THIS SHEET

SECTION 14

END DIAPHRAGM DETAILS – D1

SCALE: 1" = 1'–0"

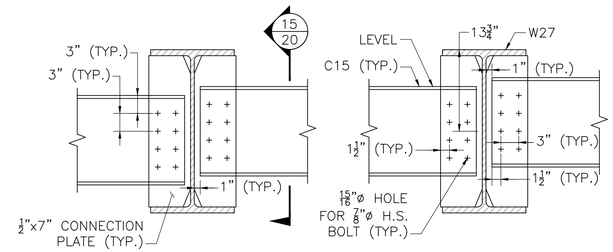

ELEVATION VIEW

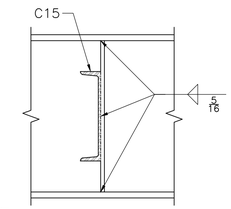

NOTE:
1. SEE CLIP DETAIL ON THIS SHEET

SECTION 15

INTERMEDIATE DIAPHRAGM DETAILS – D2

SCALE: 1" = 1'–0"

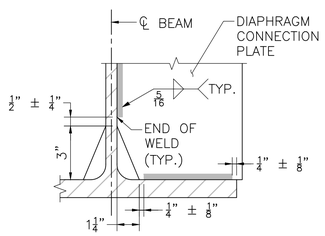

CLIP DETAIL

SCALE: 3" = 1'–0"

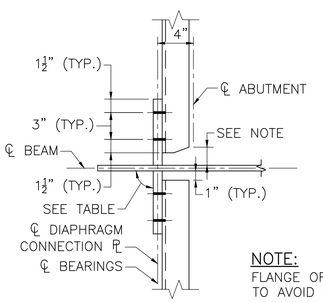

	ANGLE
N. ABUTMENT	90°0'0"
PIER 3	88°26'50"
PIER 4	90°0'0"
S. ABUTMENT	90°0'0"

NOTE:
FLANGE OF CHANNEL MAY BE CLIPPED TO AVOID INTERFERENCE WITH WEB

SECTION 16

SCALE: 3" = 1'–0"

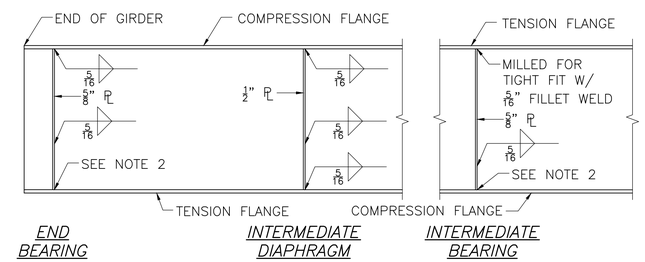

NOTES:

1. SEE CLIP DETAIL ON THIS SHEET.
2. BEARING STIFFENER PLATE AT BOTTOM FLANGE SHALL BE MILLED FOR TIGHT FIT AND WELDED WITH 5/16" FILLET WELDS BOTH SIDES OF PLATE.

STIFFENER ATTACHMENT DETAILS

SCALE: N.T.S.

*
BQX BR0

DATE	DESCRIPTION
SEPT. 8, 2018	ISSUED FOR CONSTRUCTION
USE ONLY PRINTS OF LATEST DATE	

607732_BR20(F07033).DWG Plotted on 20-Aug-2018 5:09 PM
Final Structural Submittal (SF) 08-September-2018

CAMBER

CAMBER TABLE (IN.)

BEAM NO.	CAMBER	℄ BRG. N. ABUT.	0.1L	0.2L	0.3L	0.4L	0.5L	0.6L	0.7L	0.8L	0.9L	℄ BRG. PIER 1	0.1L	0.2L	0.3L	0.4L	0.5L	0.6L	0.7L	0.8L	0.9L	℄ BRG. PIER 2	0.1L	0.2L	0.3L	0.4L	0.5L	0.6L	0.7L	0.8L	0.9L	℄ BRG. PIER 3
1,4	STEEL DL DEFLECTION	0.00	0.15	0.29	0.38	0.43	0.43	0.38	0.29	0.18	0.08	0.00	−0.03	−0.02	0.01	0.03	0.03	0.03	0.01	−0.02	−0.03	0.00	0.08	0.18	0.29	0.38	0.43	0.43	0.38	0.29	0.15	0.00
	CONC. DL DEFLECTION 1	0.00	0.54	1.01	1.36	1.56	1.60	1.47	1.20	0.82	0.39	0.00	−0.29	−0.48	−0.58	−0.60	−0.56	−0.48	−0.37	−0.24	−0.11	0.00	0.09	0.14	0.18	0.19	0.19	0.17	0.14	0.10	0.05	0.00
	CONC. DL DEFLECTION 2	0.00	−0.12	−0.23	−0.32	−0.39	−0.44	−0.45	−0.42	−0.34	−0.20	0.00	0.28	0.58	0.85	1.04	1.12	1.06	0.89	0.63	0.31	0.00	−0.24	−0.41	−0.50	−0.54	−0.53	−0.47	−0.39	−0.27	−0.14	0.00
	CONC. DL DEFLECTION 3	0.00	0.04	0.07	0.10	0.13	0.14	0.15	0.14	0.11	0.06	0.00	−0.09	−0.18	−0.28	−0.36	−0.43	−0.46	−0.44	−0.36	−0.22	0.00	0.32	0.70	1.04	1.30	1.44	1.42	1.25	0.93	0.50	0.00
	S.D.L. DEFLECTION	0.00	0.05	0.08	0.11	0.13	0.13	0.11	0.09	0.05	0.02	0.00	−0.01	0.00	0.00	0.01	0.01	0.01	0.00	0.00	−0.01	0.00	0.02	0.05	0.09	0.11	0.13	0.13	0.11	0.08	0.05	0.00
	VERT. CURVE CAMBER	0.00	0.00	0.00	0.00	0.00	0.00	0.00	0.00	0.00	0.00	0.00	0.16	0.33	0.49	0.65	0.81	0.98	1.14	1.15	0.77	0.00	1.76	3.13	4.11	4.70	4.89	4.70	4.11	3.13	1.76	0.00
	ADDITIONAL CAMBER	0.00	0.16	0.30	0.41	0.48	0.50	0.48	0.41	0.30	0.16	0.00	0.12	0.22	0.30	0.36	0.38	0.36	0.30	0.22	0.12	0.00	0.00	0.00	0.00	0.00	0.00	0.00	0.00	0.00	0.00	0.00
	TOTAL CAMBER	0.00	0.82	1.52	2.05	2.33	2.35	2.13	1.70	1.13	0.52	0.00	0.14	0.45	0.80	1.12	1.36	1.50	1.54	1.37	0.83	0.00	2.03	3.80	5.21	6.14	6.54	6.37	5.60	4.26	2.37	0.00
2,3	STEEL DL DEFLECTION	0.00	0.15	0.29	0.38	0.43	0.43	0.38	0.29	0.18	0.08	0.00	−0.03	−0.02	0.01	0.03	0.03	0.03	0.01	−0.02	−0.03	0.00	0.08	0.18	0.29	0.38	0.43	0.43	0.38	0.29	0.15	0.00
	CONC. DL DEFLECTION 1	0.00	0.64	1.21	1.63	1.87	1.91	1.75	1.42	0.98	0.47	0.00	−0.35	−0.57	−0.69	−0.72	−0.67	−0.57	−0.44	−0.29	−0.13	0.00	0.10	0.17	0.21	0.23	0.22	0.20	0.16	0.11	0.06	0.00
	CONC. DL DEFLECTION 2	0.00	−0.13	−0.26	−0.37	−0.46	−0.51	−0.52	−0.48	−0.39	−0.23	0.00	0.32	0.68	1.00	1.23	1.32	1.26	1.06	0.74	0.37	0.00	−0.29	−0.48	−0.60	−0.64	−0.63	−0.56	−0.46	−0.32	−0.17	0.00
	CONC. DL DEFLECTION 3	0.00	0.04	0.08	0.12	0.15	0.16	0.17	0.16	0.13	0.07	0.00	−0.10	−0.21	−0.32	−0.42	−0.49	−0.52	−0.50	−0.42	−0.26	0.00	0.37	0.81	1.22	1.53	1.69	1.68	1.47	1.10	0.59	0.00
	S.D.L. DEFLECTION	0.00	0.01	0.03	0.03	0.04	0.04	0.03	0.03	0.02	0.01	0.00	0.00	0.00	0.00	0.00	0.00	0.00	0.00	0.00	0.00	0.00	0.01	0.02	0.03	0.03	0.04	0.04	0.03	0.03	0.01	0.00
	VERT. CURVE CAMBER	0.00	0.00	0.00	0.00	0.00	0.00	0.00	0.00	0.00	0.00	0.00	0.16	0.33	0.49	0.65	0.81	0.98	1.14	1.15	0.77	0.00	1.76	3.13	4.11	4.70	4.89	4.70	4.11	3.13	1.76	0.00
	ADDITIONAL CAMBER	0.00	0.16	0.30	0.41	0.48	0.50	0.48	0.41	0.30	0.16	0.00	0.12	0.22	0.30	0.36	0.38	0.36	0.30	0.22	0.12	0.00	0.00	0.00	0.00	0.00	0.00	0.00	0.00	0.00	0.00	0.00
	TOTAL CAMBER	0.00	0.88	1.64	2.20	2.50	2.53	2.29	1.82	1.21	0.56	0.00	0.13	0.43	0.79	1.13	1.38	1.52	1.56	1.39	0.84	0.00	2.04	3.84	5.27	6.23	6.65	6.48	5.70	4.33	2.41	0.00

CAMBER TABLE (IN.)

BEAM NO.	CAMBER	℄ BRG. PIER 4	0.1L	0.2L	0.3L	0.4L	0.5L	0.6L	0.7L	0.8L	0.9L	℄ BRG. PIER 5	0.1L	0.2L	0.3L	0.4L	0.5L	0.6L	0.7L	0.8L	0.9L	℄ BRG. PIER 6	0.1L	0.2L	0.3L	0.4L	0.5L	0.6L	0.7L	0.8L	0.9L	℄ BRG. S. ABUT.
1,4	STEEL DL DEFLECTION	0.00	0.15	0.29	0.38	0.43	0.43	0.38	0.29	0.18	0.08	0.00	−0.03	−0.02	0.01	0.03	0.03	0.03	0.01	−0.02	−0.03	0.00	0.08	0.18	0.29	0.38	0.43	0.43	0.38	0.29	0.15	0.00
	CONC. DL DEFLECTION 1	0.00	0.05	0.10	0.14	0.17	0.19	0.19	0.18	0.14	0.09	0.00	−0.11	−0.24	−0.37	−0.48	−0.56	−0.60	−0.58	−0.48	−0.29	0.00	0.39	0.82	1.20	1.47	1.60	1.56	1.36	1.01	0.54	0.00
	CONC. DL DEFLECTION 2	0.00	−0.14	−0.27	−0.39	−0.47	−0.53	−0.54	−0.50	−0.41	−0.24	0.00	0.31	0.63	0.89	1.06	1.12	1.04	0.85	0.58	0.28	0.00	−0.20	−0.34	−0.42	−0.45	−0.44	−0.39	−0.32	−0.23	−0.12	0.00
	CONC. DL DEFLECTION 3	0.00	0.50	0.93	1.25	1.42	1.44	1.30	1.04	0.70	0.32	0.00	−0.22	−0.36	−0.44	−0.46	−0.43	−0.36	−0.28	−0.18	−0.09	0.00	0.06	0.11	0.14	0.15	0.14	0.13	0.10	0.07	0.04	0.00
	S.D.L. DEFLECTION	0.00	0.05	0.08	0.11	0.13	0.13	0.11	0.09	0.05	0.02	0.00	−0.01	0.00	0.00	0.01	0.01	0.01	0.00	0.00	−0.01	0.00	0.02	0.05	0.09	0.11	0.13	0.13	0.11	0.08	0.05	0.00
	VERT. CURVE CAMBER	0.00	1.43	2.54	3.33	3.81	3.97	3.81	3.33	2.54	1.43	0.00	0.65	0.97	0.94	0.80	0.67	0.54	0.40	0.27	0.13	0.00	0.00	0.00	0.00	0.00	0.00	0.00	0.00	0.00	0.00	0.00
	ADDITIONAL CAMBER	0.00	0.00	0.00	0.00	0.00	0.00	0.00	0.00	0.00	0.00	0.00	0.12	0.22	0.30	0.36	0.38	0.36	0.30	0.22	0.12	0.00	0.16	0.30	0.41	0.48	0.50	0.48	0.41	0.30	0.16	0.00
	TOTAL CAMBER	0.00	2.03	3.66	4.83	5.48	5.62	5.25	4.43	3.21	1.70	0.00	0.71	1.20	1.34	1.32	1.21	1.00	0.71	0.39	0.12	0.00	0.52	1.13	1.70	2.13	2.35	2.33	2.05	1.52	0.82	0.00
2,3	STEEL DL DEFLECTION	0.00	0.15	0.29	0.38	0.43	0.43	0.38	0.29	0.18	0.08	0.00	−0.03	−0.02	0.01	0.03	0.03	0.03	0.01	−0.02	−0.03	0.00	0.08	0.18	0.29	0.38	0.43	0.43	0.38	0.29	0.15	0.00
	CONC. DL DEFLECTION 1	0.00	0.06	0.11	0.16	0.20	0.22	0.23	0.21	0.17	0.10	0.00	−0.13	−0.29	−0.44	−0.57	−0.67	−0.72	−0.69	−0.57	−0.35	0.00	0.47	0.98	1.42	1.75	1.91	1.87	1.63	1.21	0.64	0.00
	CONC. DL DEFLECTION 2	0.00	−0.17	−0.32	−0.46	−0.56	−0.63	−0.64	−0.60	−0.48	−0.29	0.00	0.37	0.74	1.06	1.26	1.32	1.23	1.00	0.68	0.32	0.00	−0.23	−0.39	−0.48	−0.52	−0.51	−0.46	−0.37	−0.26	−0.13	0.00
	CONC. DL DEFLECTION 3	0.00	0.59	1.10	1.47	1.68	1.69	1.53	1.22	0.81	0.37	0.00	−0.26	−0.42	−0.50	−0.52	−0.49	−0.42	−0.32	−0.21	−0.10	0.00	0.07	0.13	0.16	0.17	0.16	0.15	0.12	0.08	0.04	0.00
	S.D.L. DEFLECTION	0.00	0.01	0.03	0.03	0.04	0.04	0.03	0.03	0.02	0.01	0.00	0.00	0.00	0.00	0.00	0.00	0.00	0.00	0.00	0.00	0.00	0.01	0.02	0.03	0.03	0.04	0.04	0.03	0.03	0.01	0.00
	VERT. CURVE CAMBER	0.00	1.43	2.54	3.33	3.81	3.97	3.81	3.33	2.54	1.43	0.00	0.65	0.97	0.94	0.80	0.67	0.54	0.40	0.27	0.13	0.00	0.00	0.00	0.00	0.00	0.00	0.00	0.00	0.00	0.00	0.00
	ADDITIONAL CAMBER	0.00	0.00	0.00	0.00	0.00	0.00	0.00	0.00	0.00	0.00	0.00	0.12	0.22	0.30	0.36	0.38	0.36	0.30	0.22	0.12	0.00	0.16	0.30	0.41	0.48	0.50	0.48	0.41	0.30	0.16	0.00
	TOTAL CAMBER	0.00	2.08	3.74	4.93	5.59	5.73	5.35	4.49	3.25	1.71	0.00	0.71	1.22	1.36	1.35	1.23	1.01	0.71	0.37	0.10	0.00	0.56	1.21	1.82	2.29	2.53	2.50	2.20	1.64	0.88	0.00

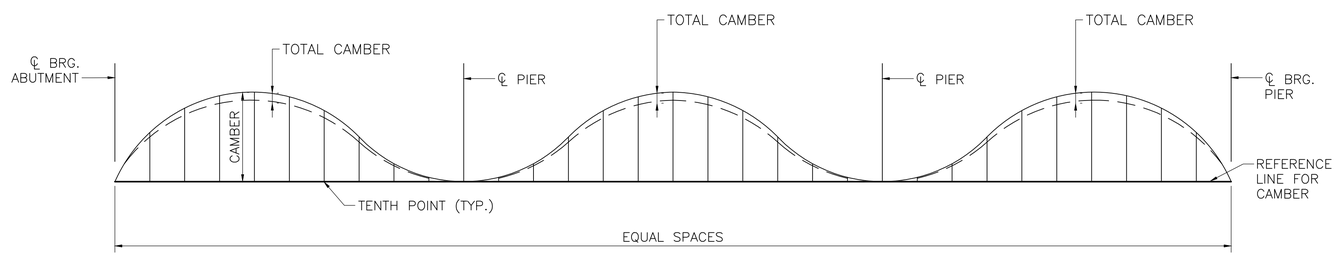

CAMBER DIAGRAM

SCALE: 1/32" = 1'-0"

*
BQX BR0

DATE	DESCRIPTION
SEPT. 8, 2018	ISSUED FOR CONSTRUCTION
USE ONLY PRINTS OF LATEST DATE	

607732_BR21(F07033).DWG Plotted on 20-Aug-2018 5:24 PM
Final Structural Submittal (SF) 08-September-2018

FRAMINGHAM/NATICK
COCHITUATE RAIL TRAIL

STATE	FED. AID PROJ. NO.	SHEET NO.	TOTAL SHEETS
MA	STP(TE)/TAP/CMQ-0035(206)	188	253
PROJECT FILE NO. 607732			

BEARING DETAILS

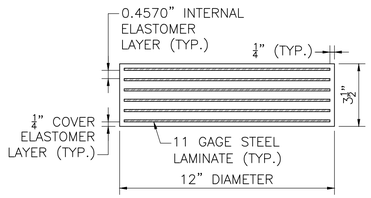

ELASTOMERIC BEARING PAD

SCALE: 3" = 1'-0"

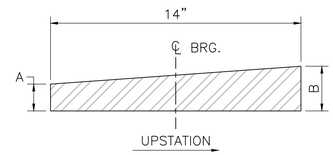

SOLE PLATE DETAIL

SCALE: 3" = 1'-0"

	A	B
N. ABUT.	1 1/2"	2 3/16"
PIER 1	1 1/2"	2 1/8"
PIER 2	1 1/2"	2 1/8"
PIER 3	1 1/2"	1 1/2"
PIER 4	1 1/2"	1 1/2"
PIER 5	2 1/8"	1 1/2"
PIER 6	2 1/8"	1 1/2"
S. ABUT.	2 3/16"	1 1/2"

NOTES:

1. ELASTOMER SHALL HAVE A SHEAR MODULUS OF 0.160 KSI.
2. STEEL LAMINATES SHALL CONFORM TO ASTM A 1011 GRADE 36.
3. THE COMPRESSIVE DESIGN LOAD ON THE BEARING PAD IS 97.02 KIPS. THE COMPRESSIVE DESIGN STRESS IS THE RESULT OF DIVIDING THE COMPRESSIVE DESIGN LOAD BY THE AREA OF THE PAD AND IS EQUAL TO 0.86 KSI.
4. ELASTOMERIC BEARING PAD SHALL NOT BE VULCANIZED TO THE SOLE PLATE
5. STEEL SOLE PLATE SHALL CONFORM TO AASHTO M 270 GRADE 36 AND SHALL BE HOT-DIP GALVANIZED
6. CENTER THE ELASTOMERIC PAD UNDER THE SOLE PLATE DURING BEAM ERECTION
7. BEAMS SHALL BE ERECTED WHEN THE AMBIENT TEMPERATURE IS BETWEEN 50 °F AND 77 °F. IF BEAMS ARE ERECTED AT OTHER AMBIENT TEMPERATURES, THEY WILL HAVE TO BE JACKED AND THE ELASTOMERIC BEARINGS RECENTERED WHEN THE TEMPERATURE RETURNS TO THAT RANGE.
8. ALL SOLE PLATES SHALL BE MARKED PRIOR TO SHIPPING. THE MARKS SHALL INCLUDE THE SOLE PLATE LOCATION ON THE BRIDGE AND A 1/32" DEEP DIRECTION ARROW THAT POINTS UP STATION. ALL MARKS SHALL BE PERMANENT AND BE VISIBLE AFTER SOLE PLATES ARE INSTALLED.

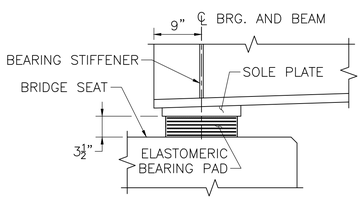

[ABUTMENT BEARING SHOWN, PIER BEARINGS SIMILAR]

ELEVATION

SCALE: 1" = 1'-0"

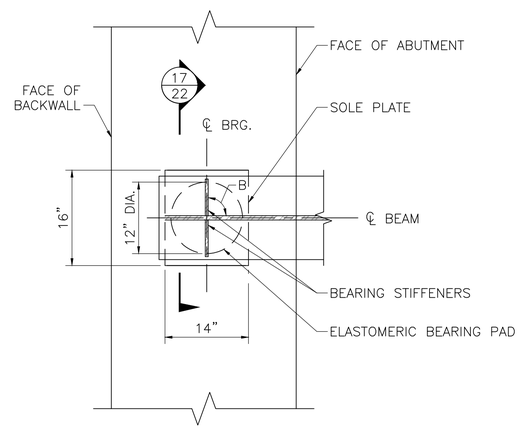

[ABUTMENT BEARING SHOWN, PIER BEARINGS SIMILAR]

PLAN

SCALE: 1" = 1'-0"

ANGLE B	
N. ABUT.	90°0'0"
PIER 1	90°0'0"
PIER 2	90°0'0"
PIER 3	88°26'50"
PIER 4	90°0'0"
PIER 5	90°0'0"
PIER 6	90°0'0"
S. ABUT.	90°0'0"

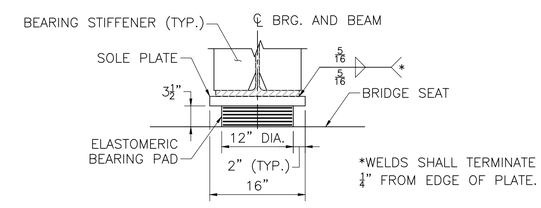

SECTION 17

SCALE: 1" = 1'-0"

*
BQX BR0

DATE	DESCRIPTION
SEPT. 8, 2018	ISSUED FOR CONSTRUCTION
USE ONLY PRINTS OF LATEST DATE	

607732_BR22(F07033).DWG Plotted on 20-Aug-2018 5:24 PM
Final Structural Submittal (SF) 06-September-2018

FRAMINGHAM/NATICK
COCHITUATE RAIL TRAIL

STATE	FED. AID PROJ. NO.	SHEET NO.	TOTAL SHEETS
MA	STP(TE)/TAP/CMQ-0035(206)	189	253
PROJECT FILE NO. 607732			

ABUTMENT END DIAPHRAGM

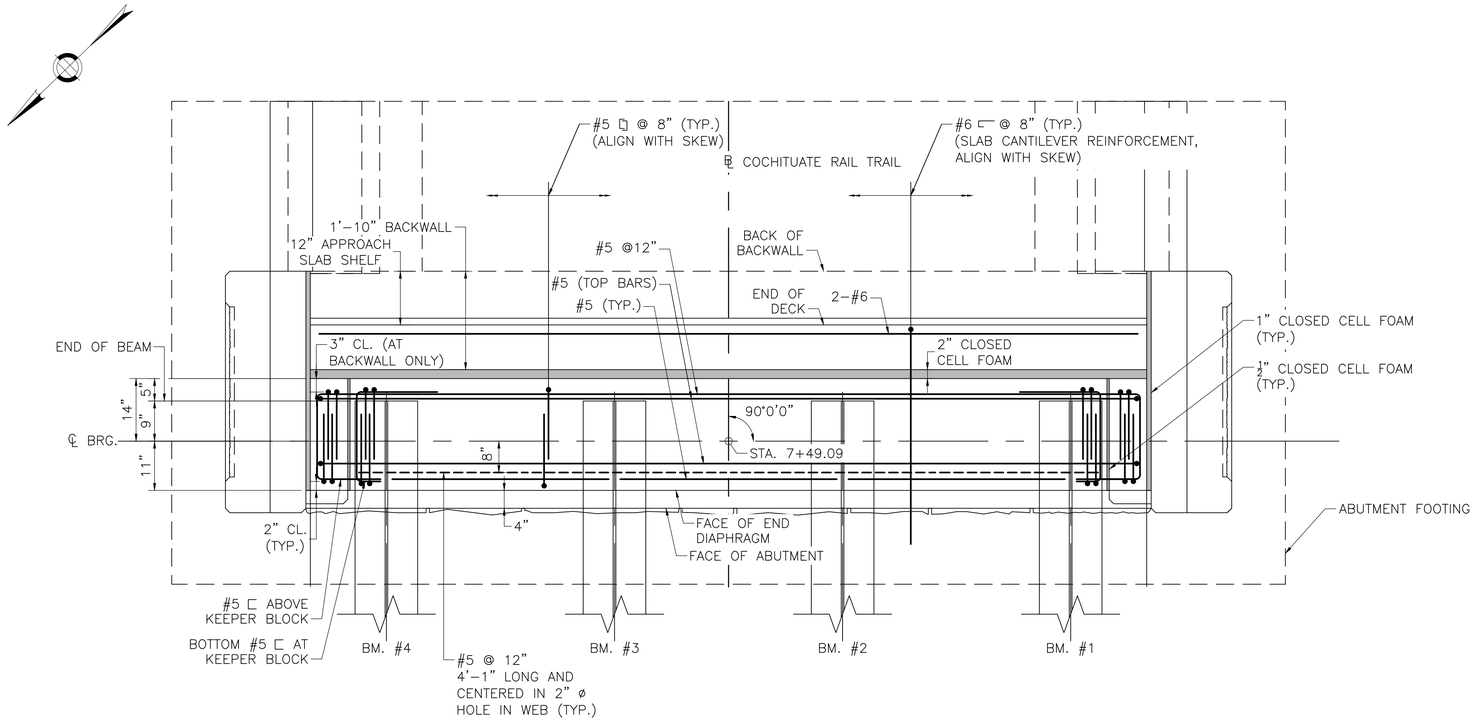

[SOUTH ABUTMENT SHOWN, NORTH ABUTMENT SIMILAR]

ABUTMENT END DIAPHRAGM PLAN

SCALE: ¾" = 1'-0"

END DIAPHRAGM NOTES:

1. CONCRETE DECK AND STEEL END DIAPHRAGMS NOT SHOWN FOR CLARITY.
2. SOUTH ABUTMENT SHOWN, NORTH ABUTMENT SIMILIAR.
3. CONTRACTOR MAY USE EXPANDED POLYSTYRENE FILLER OR A REMOVABLE FORM TO FORM THE BOTTOM OF THE END DIAPHRAGM.

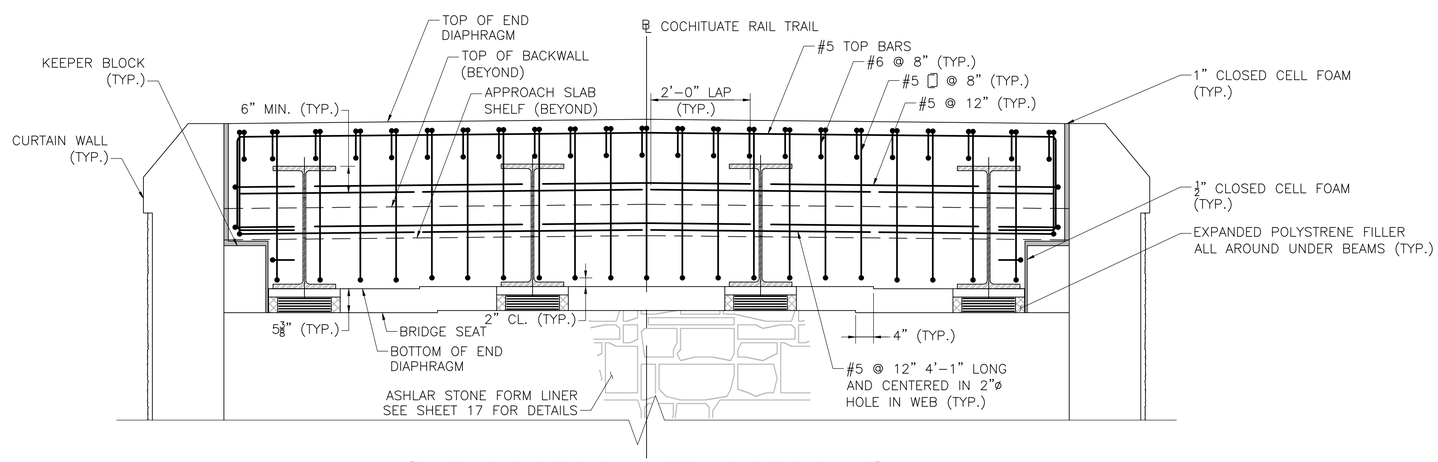

[SOUTH ABUTMENT SHOWN, NORTH ABUTMENT SIMILAR]

ABUTMENT END DIAPHRAGM ELEVATION

SCALE: ¾" = 1'-0"

*
BQX BR0

DATE	DESCRIPTION
SEPT. 8, 2018	ISSUED FOR CONSTRUCTION
USE ONLY PRINTS OF LATEST DATE	

607732_BR23(F07033).DWG Plotted on 20-Aug-2018 5:23 PM
Final Structural Submittal (SF) 08-September-2018

FRAMINGHAM/NATICK
COCHITUATE RAIL TRAIL

STATE	FED. AID PROJ. NO.	SHEET NO.	TOTAL SHEETS
MA	STP(TE)/TAP/CMQ-0035(206)	190	253
PROJECT FILE NO. 607732			

PIER END DIAPHRAGM

END DIAPHRAGM NOTES:

1. CONCRETE DECK AND STEEL END DIAPHRAGMS NOT SHOWN FOR CLARITY.
2. PIER 4 SHOWN, PIER 3 SIMILIAR.
3. CONTRACTOR MAY USE EXPANDED POLYSTYRENE FILLER OR A REMOVABLE FORM TO FORM THE BOTTOM OF THE END DIAPHRAGM.

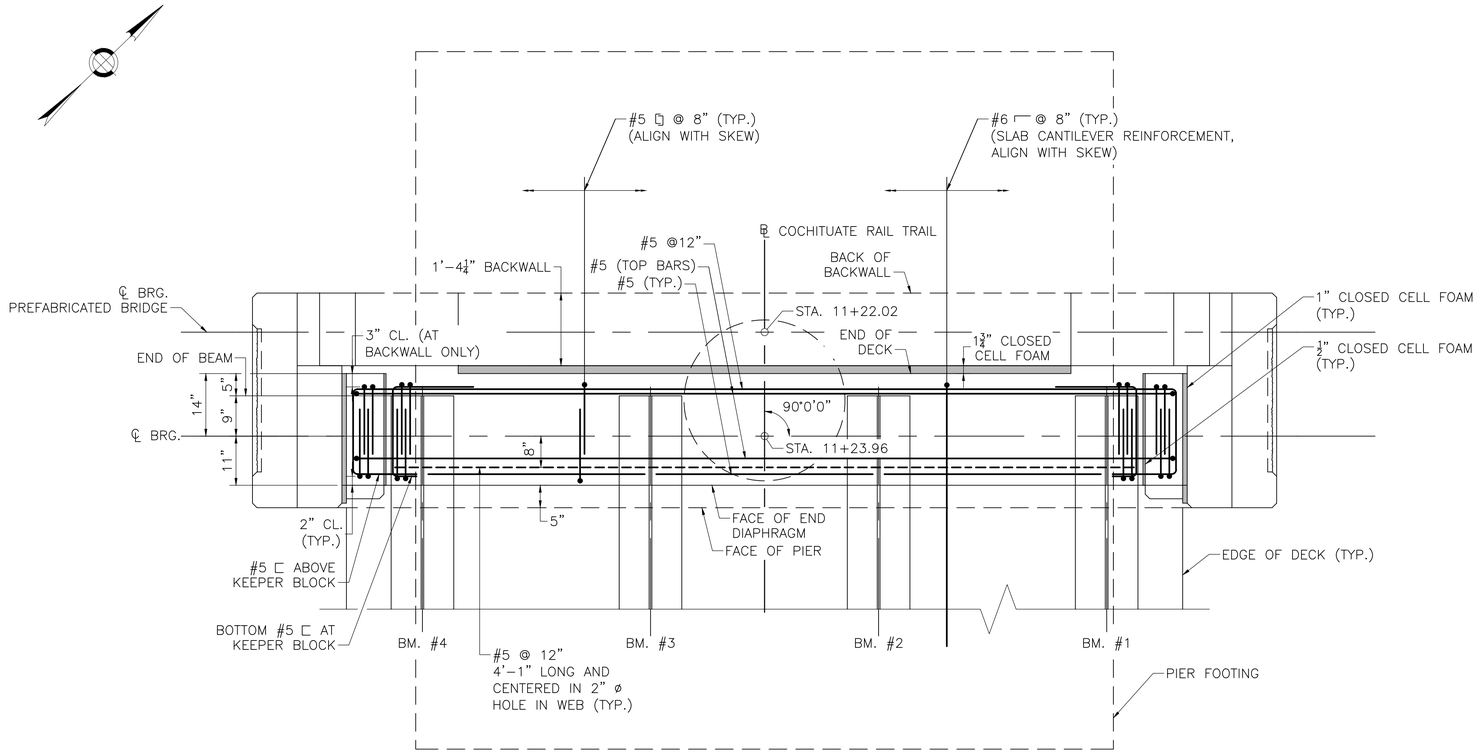

[PIER 4 SHOWN, PIER 3 SIMILAR]

PIER END DIAPHRAGM PLAN

SCALE: ¾" = 1'-0"

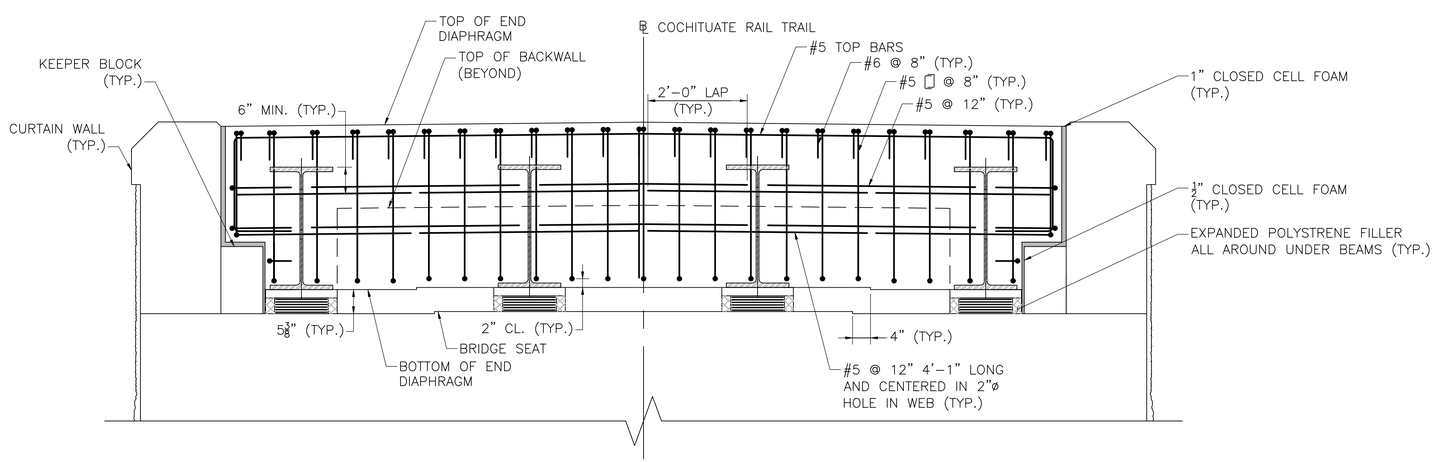

[PIER 4 SHOWN, PIER 3 SIMILAR]

PIER END DIAPHRAGM ELEVATION

SCALE: ¾" = 1'-0"

*
BQX
BR0

DATE	DESCRIPTION
SEPT. 8, 2018	ISSUED FOR CONSTRUCTION
USE ONLY PRINTS OF LATEST DATE	

607732_BR24(F07033).DWG Plotted on 20-Aug-2018 5:23 PM
Final Structural Submittal (SF) 08-September-2018

STATE	FED. AID PROJ. NO.	SHEET NO.	TOTAL SHEETS
MA	STP(TE)/TAP/CMQ-003S(206)	191	253
PROJECT FILE NO. 607732			

TRANSVERSE SECTION AND DECK DETAILS

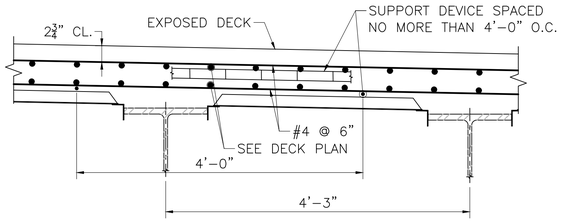

TYPICAL APPROACH DECK REINFORCEMENT

SCALE: 1" = 1'-0"

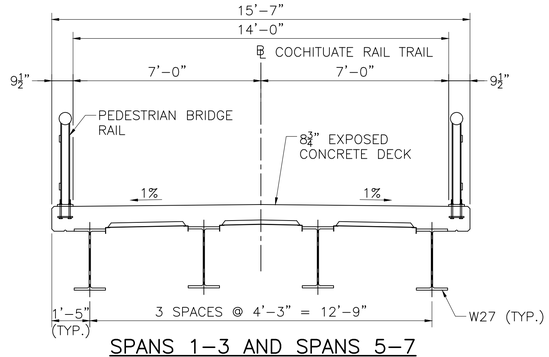

SPANS 1-3 AND SPANS 5-7 TRANSVERSE SECTION

SCALE: ⅜" = 1'-0"

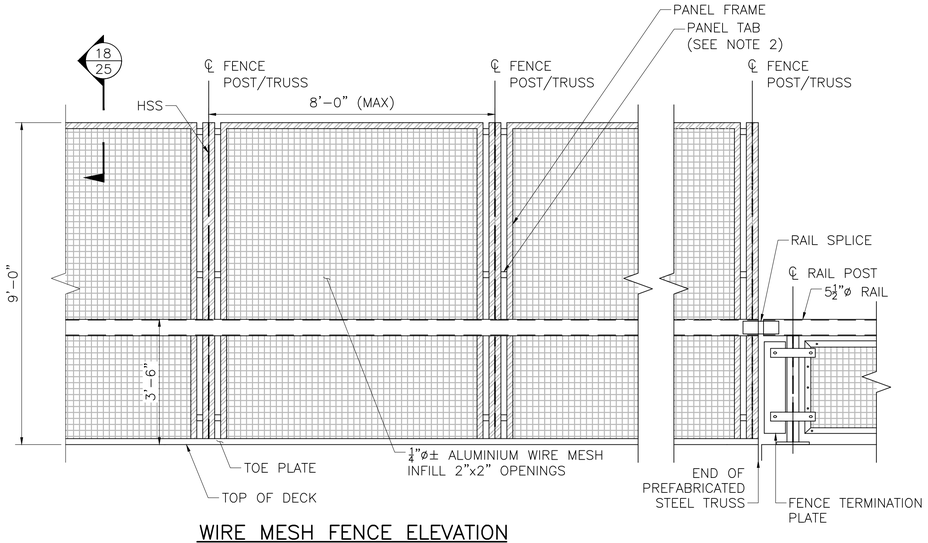

WIRE MESH FENCE ELEVATION

SCALE: ½" = 1'-0"

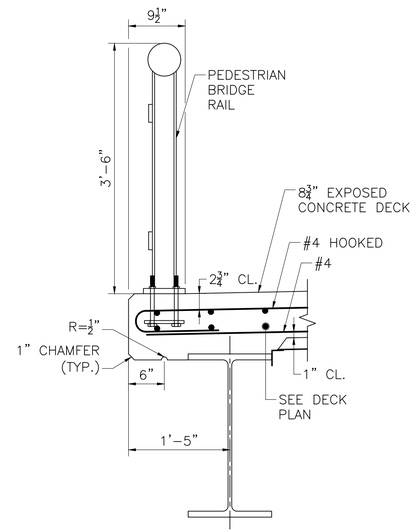

PEDESTRIAN BRIDGE RAIL SECTION

SCALE: 1" = 1'-0"

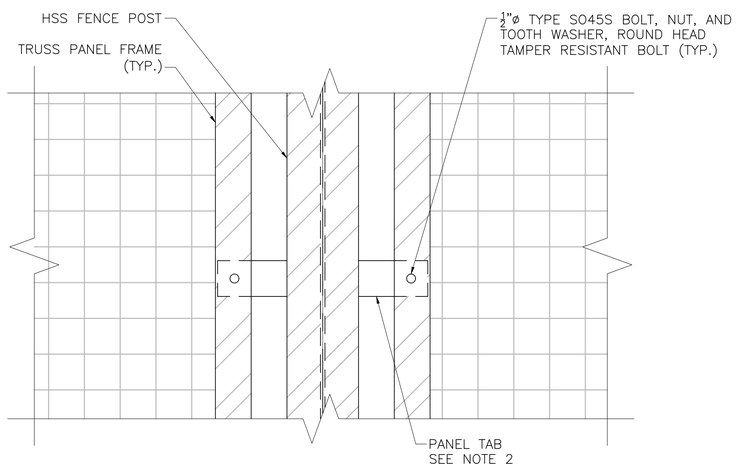

PANEL TAB AND FRAME DETAIL

SCALE: 3" = 1'-0"

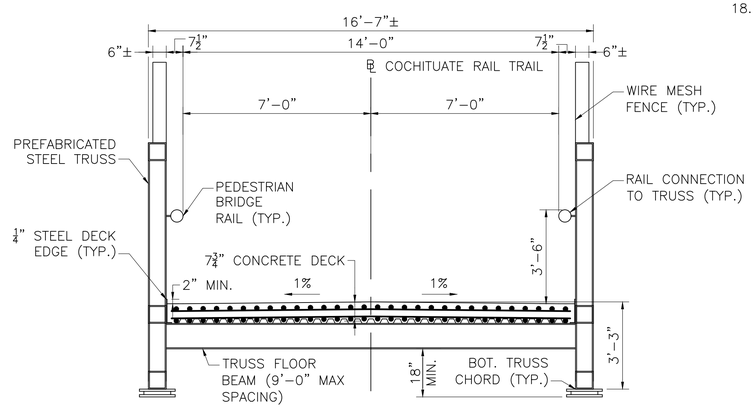

NOTE:

CROSS-SECTION IS FOR CONCEPTUAL PURPOSES ONLY. ACTUAL CROSS-SECTION WILL VARY FROM MANUFACTURER

SPAN 4 TRANSVERSE SECTION

SCALE: ⅜" = 1'-0"

DECK NOTES:

1. DECK SLAB SHALL BE 4000 PSI., ¾" IN, 585 HP CEMENT CONCRETE
2. LONGITUDINAL REINFORCEMENT SHALL BE PLACED PARALLEL TO THE ℄ OF STEEL BEAMS. TRANSVERSE (PRIMARY) REINFORCEMENT SHALL BE PLACED PERPENDICULAR TO THE ℄ OF STEEL BEAMS.
3. ALL REINFORCEMENT AND SUPPORT DEVICES SHALL BE EPOXY COATED
4. AFTER TROWELING DECK SHALL BE BRUSHED FINISHED TO PRODUCE A NON-SLIP FINISH.

PREFABRICATED BRIDGE NOTES:

5. DECK SLABS SHALL BE 4000 PSI ¾ IN., 585 HP CEMENT CONCRETE.
6. MESH PANEL: FENCE MANUFACTURER TO PROVIDE ¼ IN. DIAMETER WIRE WITH 2" SQUARE MESH. PANEL SHALL BE SURROUNDED IN U-CHANNEL ALUMINIUM FRAME. PROVIDE DRAINAGE HOLES IN BOTTOM CHANNEL FRAME. FENCE SHOWN AS CONCEPTUAL DESIGN ONLY. FENCE DESIGN, DETAILING, AND CONNECTION TO TRUSS VERTICAL MEMBERS SHALL BE DESIGNED BY BRIDGE MANUFACTURER.
7. OVERALL WIDTH AND DEPTH OF PREFABRICATED PEDESTRIAN BRIDGE TO BE COORDINATED WITH BRIDGE MANUFACTURER PRIOR TO CONSTRUCTION OF ABUTMENT BEAMSEAT AND BACKWALL.
8. DEPTH OF SUPERSTRUCTURE TO BE COORDINATED WITH BRIDGE MANUFACTURER PRIOR TO BEAM SEAT CONSTRUCTION, DEPTH OF SUPERSTRUCTURE + BEARING ASSEMBLY = 2'-8" MAX. △1 3'-3"
9. BRIDGE SELECTION SHALL BE SUBMITTED TO THE ENGINEER FOR APPROVAL. △1
10. PREFABRICATED BRIDGE TO BE DESIGNED IN ACCORDANCE WITH THE 2009 AASHTO LRFD GUIDE SPECIFICATIONS FOR THE DESIGN OF PEDESTRIAN BRIDGES.
11. ALL REINFORCEMENT AND SUPPORT DEVICES SHALL BE EPOXY COATED.
12. DELIVERY AND INSTALLATION OF PREFABRICATED PEDESTRIAN BRIDGE AND BEARING ASSEMBLY SHALL BE PER MANUFACTURERS RECOMMENDATION.
13. ALL STRUCTURAL STEEL OTHER THAN STRUCTURAL TUBING SHALL BE AASHTO M270 GRADE 50. STRUCTURAL TUBING SHALL BE ASTM A1085 GRADE A, MINIMUM STRUCTURAL TUBULAR MEMBER THICKNESS SHALL BE ¼".
14. ALL EXPOSED STEEL SURFACES SHALL BE FINISHED AND FREE OF COARSE OR RUGGED EDGES. WELDED TUBULAR CONNECTIONS SHALL BE DESIGNED IN ACCORDANCE WITH THE AASHTO/AWS D1.5 BRIDGE WELDING CODE. SEE SPECIAL PROVISIONS FOR ADDITIONAL REQUIREMENTS.
15. ALL NON TUBULAR WELDED CONNECTIONS SHALL BE DESIGNED IN ACORDANCE WITH THE STRUCTURAL WELDING CODE – STEEL ANSI/AWS/D1.5. SEE SPECIAL PROVISIONS FOR ADDITIONAL REQUIREMENTS.
16. ALL STRUCTURAL STEEL AND STRUCTURAL TUBING SHALL BE GALVANIZED AND PAINTED DARK BRONZE (FEDERAL STD. 595B COLOR NO. 10045).
17. ALL HARDWARE, ALUMINUM COMPONENTS, AND FABRIC SHALL RECEIVE A 4±1 MIL POLYESTER POWDER COAT FINISH. THE COLOR SHALL MATCH THE COLOR OF THE RAILING.
18. THE MAXIMUM UNFACTORED PREFABRICATED BRIDGE DEAD LOAD PER PIER IS 120 KIPS, INCLUDING TRUSS, DECK, FENCE, AND ALL OTHER MISCELLANEOUS COMPONENTS.

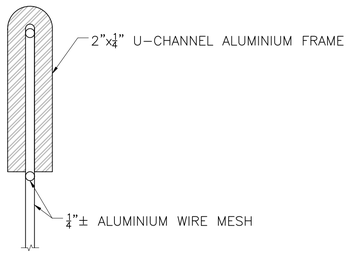

SECTION 18

SCALE: 1'-0" = 1'-0"

*
BQX BR0

DATE	DESCRIPTION
NOV. 16, 2018	△1 ADDENDUM 2 NOTE 8 REVISED
SEPT. 8, 2018	ISSUED FOR CONSTRUCTION
USE ONLY PRINTS OF LATEST DATE	

607732_BR25(F07033).DWG Plotted on 15-Nov-2018 9:36 AM
Final Structural Submittal (SF) 08-September-2018

FRAMINGHAM/NATICK
COCHITUATE RAIL TRAIL

STATE	FED. AID PROJ. NO.	SHEET NO.	TOTAL SHEETS
MA	STP(TE)/TAP/CMQ-0035(206)	192	253
PROJECT FILE NO. 607732			

TOP OF FORM ELEVATIONS AND DECK DETAILS

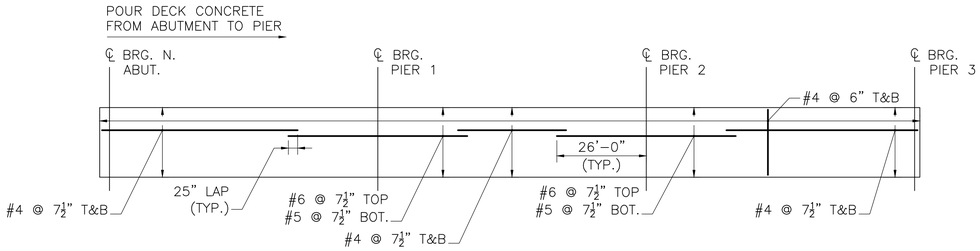

[NORTH APPROACH SPANS SHOWN, SOUTH APPROACH SIMILAR]

DECK REINFORCEMENT PLAN

NOT TO SCALE

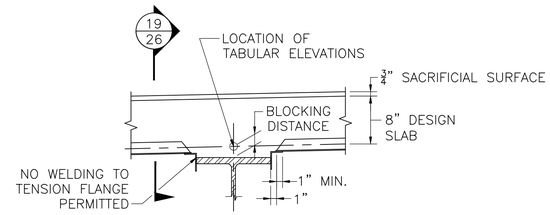

HAUNCH DETAIL

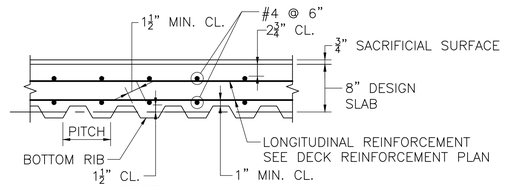

SECTION 19

SPANS 1–3 AND SPANS 5–7 STAY–IN–PLACE FORM DETAILS

NOT TO SCALE

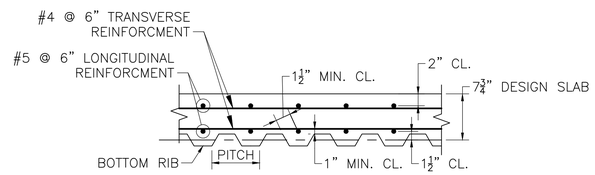

SPAN 4 STAY–IN–PLACE FORM DETAILS

NOT TO SCALE

DECK POUR NOTES:

1. APPROACH SPAN DECK SHALL BE POURED CONTINUOUSLY BEGINNING AT THE ABUTMENTS.

TOP OF FORM NOTES:

2. AFTER THE BEAMS ARE ERECTED BUT BEFORE THE FORMS ARE BUILT, ELEVATIONS ON TOP OF THE FLANGE OF THE BEAMS ARE TO BE OBTAINED AT THE POINTS INDICATED IN THE TABLE. THE DIFFERENCE BETWEEN THE ELEVATIONS OBTAINED AND THOSE SHOWN IN THE TABLE GIVES THE ACTUAL BLOCKING DISTANCE FROM THE TOP OF THE BEAM TO THE BOTTOM OF THE SLAB AT A CENTER LINE OF BEAM.

S.I.P. FORM NOTES:

3. FOR 2" S.I.P. FORM, SET BOTTOM OF FORM 1" BELOW ELEVATION GIVEN IN TABLE. FOR 3" S.I.P. FORM, SET BOTTOM OF FORM 1½" BELOW TABLE ELEVATIONS.
4. FORM ENDS SHALL BE CRIMPED CLOSED IN A TAPERED MANNER. SEPARATE END CLOSURE PIECES WILL NOT BE ALLOWED.
5. SUPPORT ANGLES SHALL BE PLACED IN THE "LEG DOWN" POSITION WHERE POSSIBLE. WHERE "LEG UP" POSITION IS NECESSARY, THE UPPER MOST PORTION OF THE ANGLE SHALL NOT PROJECT MORE THAN 1" ABOVE THE TOP FLANGE OR COVER PLATE. THE CONTRACTOR SHALL HAVE AN ASSORTMENT OF ANGLES OF VARIOUS SIZES AVAILABLE ON THE SITE TO CONFORM TO THIS REQUIREMENT.
6. ALL MAIN STEEL REINFORCEMENT IN THE LOWER MAT SHALL BE CENTERED OVER THE VALLEY OF THE S.I.P. FORM.
7. CONTRACTOR SHALL DESIGN AND DETAIL ALL ELEMENTS OF THE FORMING SYSTEM AND SHALL SUBMIT TO THE ENGINEER FOR APPROVAL.
8. IN CASES WHERE STANDARD 2" OR 3" DEEP S.I.P. FORMS DO NOT SATISFY DESIGN REQUIREMENTS AN ALTERNATIVE FORMING SYSTEM CONSISTING OF DEEPER S.I.P. FORMS OR REMOVABLE FORMS SHALL BE DESIGNED AND DETAILED BY THE CONTRACTOR AND SUBMITTED TO THE ENGINEER FOR APPROVAL. THE DESIGN THICKNESS OF THE SLAB SHALL NOT BE REDUCED.

TOP OF FORM ELEVATIONS FOR DECK SLAB PRIOR TO PLACEMENT OF CONCRETE

INCREASING STATIONS →

BEAM NO.	SPAN 1									SPAN 2								SPAN 3							
	℄ BRG. N. ABUT.	1/8 PT.	1/4 PT.	3/8 PT.	1/2 PT.	5/8 PT.	3/4 PT.	7/8 PT.	℄ BRG. PIER 1	1/8 PT.	1/4 PT.	3/8 PT.	1/2 PT.	5/8 PT.	3/4 PT.	7/8 PT.	℄ BRG. PIER 2	1/8 PT.	1/4 PT.	3/8 PT.	1/2 PT.	5/8 PT.	3/4 PT.	7/8 PT.	℄ BRG. PIER 3
1	158.04	158.57	159.09	159.60	160.08	160.54	160.99	161.43	161.88	162.35	162.83	163.32	163.81	164.29	164.76	165.19	165.58	165.94	166.26	166.52	166.73	166.86	166.92	166.92	166.85
2	158.08	158.62	159.14	159.65	160.14	160.60	161.04	161.48	161.92	162.39	162.87	163.36	163.85	164.33	164.80	165.23	165.62	165.98	166.30	166.57	166.78	166.91	166.98	166.97	166.89
3	158.08	158.62	159.14	159.65	160.14	160.60	161.04	161.48	161.92	162.39	162.87	163.36	163.85	164.33	164.80	165.23	165.62	165.98	166.30	166.57	166.78	166.91	166.98	166.97	166.89
4	158.04	158.57	159.09	159.60	160.08	160.54	160.99	161.43	161.88	162.35	162.83	163.32	163.81	164.29	164.76	165.19	165.58	165.94	166.26	166.52	166.73	166.86	166.92	166.92	166.85

TOP OF FORM ELEVATIONS FOR DECK SLAB PRIOR TO PLACEMENT OF CONCRETE

INCREASING STATIONS →

BEAM NO.	SPAN 5									SPAN 6								SPAN 7							
	℄ BRG. PIER 4	1/8 PT.	1/4 PT.	3/8 PT.	1/2 PT.	5/8 PT.	3/4 PT.	7/8 PT.	℄ BRG. PIER 5	1/8 PT.	1/4 PT.	3/8 PT.	1/2 PT.	5/8 PT.	3/4 PT.	7/8 PT.	℄ BRG. PIER 6	1/8 PT.	1/4 PT.	3/8 PT.	1/2 PT.	5/8 PT.	3/4 PT.	7/8 PT.	℄ BRG. S. ABUT.
1	166.18	166.15	166.08	165.94	165.75	165.49	165.18	164.83	164.44	164.03	163.59	163.12	162.65	162.17	161.68	161.19	160.72	160.27	159.83	159.38	158.92	158.44	157.93	157.41	156.88
2	166.22	166.21	166.13	166.00	165.80	165.54	165.23	164.87	164.49	164.07	163.63	163.16	162.69	162.21	161.72	161.24	160.76	160.32	159.88	159.44	158.98	158.49	157.98	157.46	156.92
3	166.22	166.21	166.13	166.00	165.80	165.54	165.23	164.87	164.49	164.07	163.63	163.16	162.69	162.21	161.72	161.24	160.76	160.32	159.88	159.44	158.98	158.49	157.98	157.46	156.92
4	166.18	166.16	166.08	165.94	165.75	165.49	165.18	164.83	164.44	164.03	163.59	163.12	162.65	162.17	161.68	161.19	160.72	160.27	159.83	159.38	158.92	158.44	157.93	157.41	156.88

*
BQX BR0

DATE	DESCRIPTION
SEPT. 8, 2018	ISSUED FOR CONSTRUCTION
USE ONLY PRINTS OF LATEST DATE	

607732_BR26(F07033).DWG Plotted on 20-Aug-2018 5:23 PM
Final Structural Submittal (SF) 08-September-2018

FRAMINGHAM/NATICK
COCHITUATE RAIL TRAIL

STATE	FED. AID PROJ. NO.	SHEET NO.	TOTAL SHEETS
MA	STP(TE)/TAP/CMQ-0035(206)	193	253
PROJECT FILE NO. 607732			

STRIP SEAL DETAILS

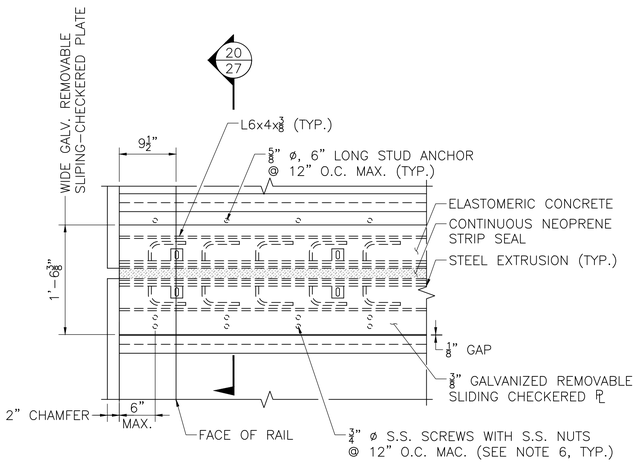

PLAN – STRIP SEAL JOINT

SCALE: 1" = 1'-0"

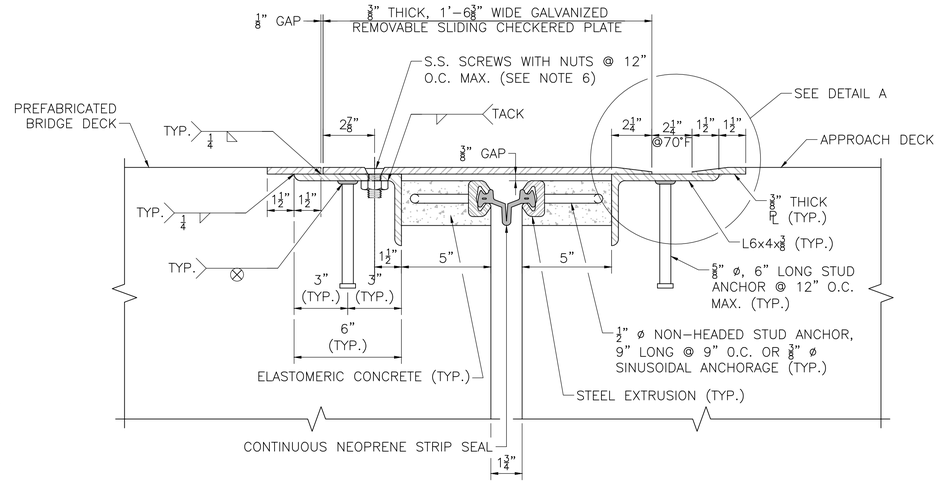

SECTION 20: THRU DECK

SCALE: 3" = 1'-0"

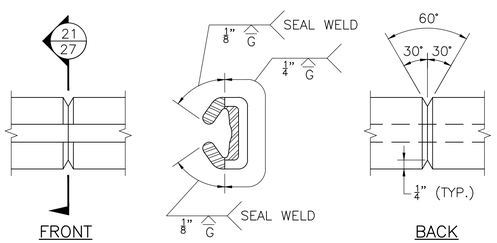

SECTION 21

STEEL EXTRUSION SHOP SPLICE DETAIL

SCALE: 6" = 1'-0"

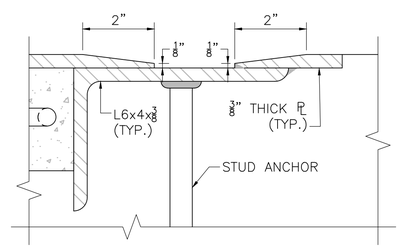

DETAIL A

SCALE: 6" = 1'-0"

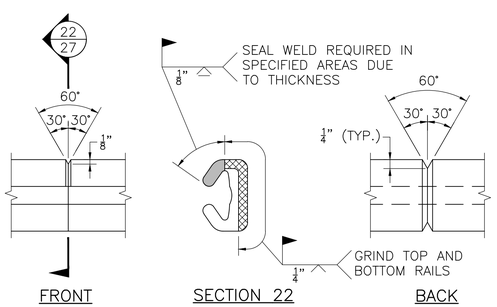

SECTION 22

STEEL EXTRUSION FIELD SPLICE DETAIL

SCALE: 6" = 1'-0"

STRIP SEAL JOINT NOTES:

1. THE DETAILS SHOWN HERE ARE INTENDED AS A GENERAL GUIDE FOR A TYPICAL GLANDULAR TYPE STRIP SEAL JOINT SYSTEM. SHOP DRAWINGS WHICH INCLUDE DETAILS OF THE GLAND SHAPE, STEEL EXTRUSION SHAPE, WELDING PROCEDURE SPECIFICATIONS, ANCHOR ARRANGEMENT. TEMPERATURE CORRECTION REQUIREMENTS, TEMPORARY SUPPORT DETAILS, AND MODIFICATIONS TO ACCOMMODATE THE LONGITUDINAL JOINT IN THE SIDEWALK SHALL BE SUBMITTED FOR APPROVAL OF THE ENGINEER ACCORDING TO THE STANDARD SPECIFICATIONS.
2. ALL STRUCTURAL STEEL COMPONENTS SHALL CONFORM TO AASHTO M270 GRADE 36. AFTER THE COMPLETION OF ALL WELDING OPERATIONS STEEL PLATE ASSEMBLIES SHALL BE HOT-DIP GALVANIZED.
3. ELASTOMERIC CONCRETE BLOCKOUT SHALL BE SANDBLASTED, CLEANED WITH COMPRESSED OIL FREE AIR, AND PRIMED WITH BONDING COMPOUND PRIOR TO CASTING ELASTOMERIC CONCRETE.
4. NEOPRENE STRIP SEAL SHALL BE BONDED TO STEEL EXTRUSION WITH APPROVED ADHESIVE.
5. INSTALL CONTINUOUS NEOPRENE STRIP SEAL IN THE FIELD SPLICING OF SEAL IS NOT PERMITTED. TEMPORARY SEAL SHALL BE REQUIRED ON STAGE CONSTRUCTION PROJECTS AND BE INCIDENTAL TO ITEM 995.
6. 3/4"ø STAINLESS STEEL FLAT HEAD MACHINE SCREWS STAINLESS STEEL NUTS. RECESS 1/16" BELOW PLATE SURFACE. PRIOR TO PLACEMENT OF SIDEWALK/SAFETY CURB CONCRETE, LUBRICATE STAINLESS STEEL SCREWS WITH GRAPHITE AND SET SECURELY IN PLACE. MACHINE SCREWS TO BE TEMPORARILY REMOVED AFTER CONCRETE HAS ATTAINED FINAL SET.
7. NO WELDING OF PORTIONS OF STEEL EXTRUSIONS IN DIRECT CONTACT WITH NEOPRENE SEAL SHALL BE PERMITTED.

*
BQX BR0

DATE	DESCRIPTION
SEPT. 8, 2018	ISSUED FOR CONSTRUCTION
USE ONLY PRINTS OF LATEST DATE	

607732_BR27(F07033).DWG Plotted on 20-Aug-2018 5:21 PM
Final Structural Submittal (SF) 08-September-2018

FRAMINGHAM/NATICK
COCHITUATE RAIL TRAIL

STATE	FED. AID PROJ. NO.	SHEET NO.	TOTAL SHEETS
MA	STP(TE)/TAP/CMQ-0035(206)	194	253
PROJECT FILE NO. 607732			

PEDESTRIAN RAIL DETAILS (1 OF 2)

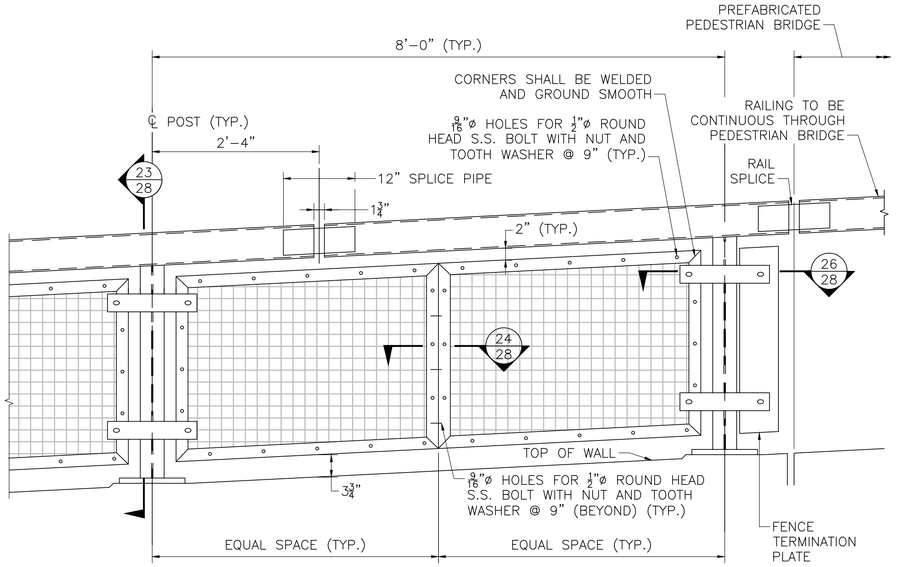

BRIDGE RAILING ELEVATION (BACK SIDE)
SCALE: 1" = 1'-0"

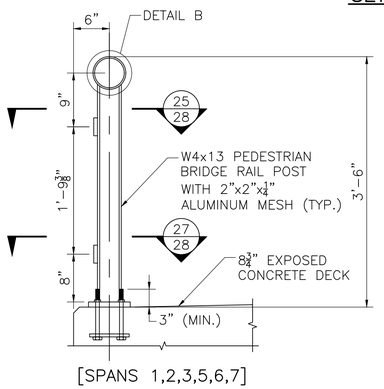

[SPANS 1,2,3,5,6,7]

SECTION 23
SCALE: 1" = 1'-0"

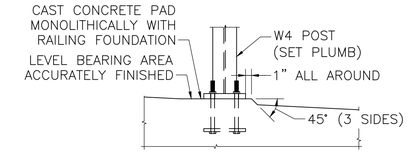

SETTING OF POSTS (PROFILE GRADE OVER 1.5%)
SCALE: 1" = 1'-0"

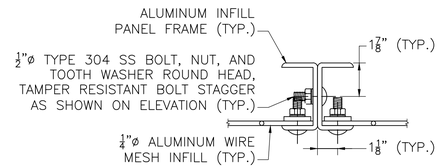

SECTION 24
SCALE: 3" = 1'-0"

NOTES:

1. RAIL POST AND BASE PLATES SHALL CONFORM TO THE REQUIREMENTS OF AASHTO M 270 GRADE 50. PIPE RAILING AND PIPE SPLICE SHALL CONFORM TO THE REQUIREMENTS OF ASTM A53 WITH A CERTIFIED Fy = 35 KSI MINIMUM. PLATES SHALL CONFORM TO THE REQUIREMENTS OF AASHTO M 270 GRADE 36.
2. ALL STEEL SHAPES AND PLATES SHALL BE GALVANIZED AND PAINTED BLACK (FEDERAL STANDARD 595 COLOR NO. 27038).
3. ALL HARDWARE, ALUMINUM COMPONENTS, AND FABRIC SHALL RECEIVE A 4±1 MIL POLYESTER POWDER COAT FINISH. THE COLOR SHALL MATCH THE COLOR OF THE RAILING.
4. HEADS OF EXPOSED BOLTS SHALL BE PAINTED BLACK.
5. ANCHOR BOLTS SHALL BE SET WITH TEMPLATES. THE NUT SECURING THE POST BASE PLATE TO THE CONCRETE SHALL BE TIGHTENED TO A SNUG FIT AND GIVEN AN ADDITIONAL 1/8 TURN AFTER STEEL IS IN PLACE.
6. RAILINGS SHALL BE CONTINUOUS OVER A MINIMUM OF FOUR (4) POSTS WITHOUT SPLICES WITHOUT SPLICES WHERE POSSIBLE.
7. ENDS OF RAILING SECTIONS SHALL BE SAWED. GRIND SMOOTH EXPOSED EDGES. ALL CUT ENDS SHALL BE TRUE AND SMOOTH.
8. ALL POSTS TO BE PLUMB WHEN PROFILE GRADE EXCEEDS 1.5%. FOR PROFILE GRADES LESS THAN 1.5%, POSTS SHALL BE SET PERPENDICULAR TO GRADE.
9. POST WELDS DO NOT REQUIRE MAGNETIC PARTICLE TESTING.
10. ALUMINUM: PROVIDE ALLOY AND TEMPER RECOMMENDED BY ALUMINUM PRODUCER AND FINISHER FOR TYPE OF USE AND FINISH INDICATED, AND WITH NOT LESS THAN THE STRENGTH AND DURABILITY PROPERTIES OF THE ALLOY AND TEMPER DESIGNATED BELOW FOR EACH ALUMINUM FORM REQUIRED:

10.a. EXTRUDED BARS AND TUBE: ASTM B 221, ALLOYS 6005-T5, 6061-T6 AND 6063-T6.

10.b. PANEL CLIPS AND STRUCTURAL FASTENERS: ALLOY 6063-T6

11. MESH PANEL: RAILING MANUFACTURER TO PROVIDE 1/4 IN. DIAMETER WIRE WITH 2" SQUARE MESH. PANEL SHALL BE SURROUNDED IN U-CHANNEL ALUMINUM FRAME. PROVIDE DRAINAGE HOLES IN BOTTOM CHANNEL FRAME.
12. ALL ALUMINUM SHALL HAVE AN ANODIZED FINISH, CLASS I PROVIDED IN ACCORDANCE WITH AA-M12-C22-A41.

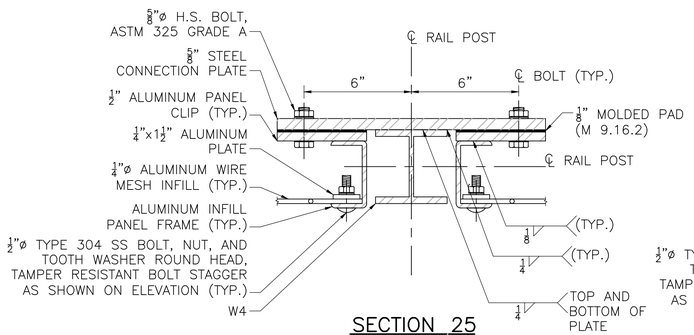

SECTION 25
SCALE: 3" = 1'-0"

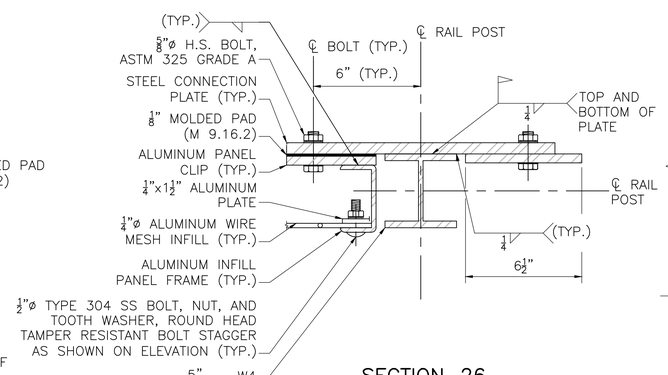

SECTION 26
SCALE: 3" = 1'-0"

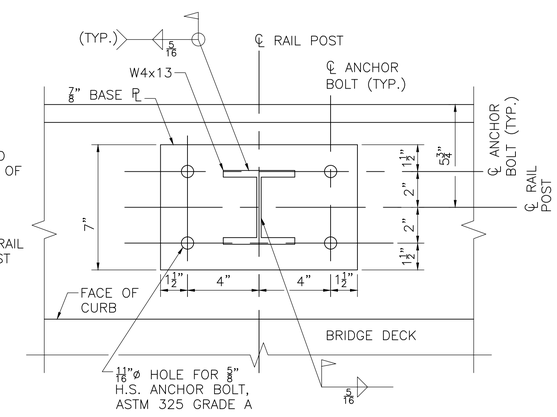

SECTION 27
SCALE: 3" = 1'-0"

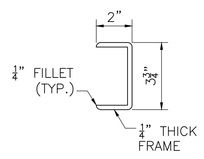

INFILL PANEL FRAME
SCALE: 3" = 1'-0"

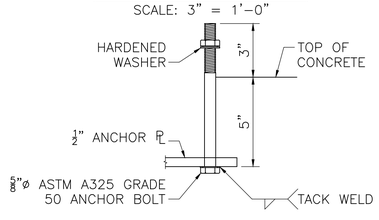

ANCHOR BOLT
SCALE: 3" = 1'-0"

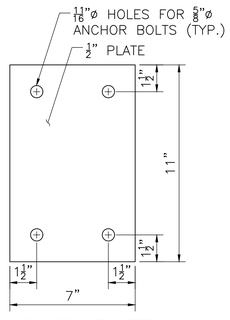

ANCHOR PLATE
SCALE: 3" = 1'-0"

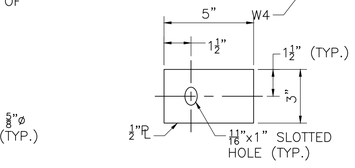

PANEL CLIP DETAIL
SCALE: 3" = 1'-0"

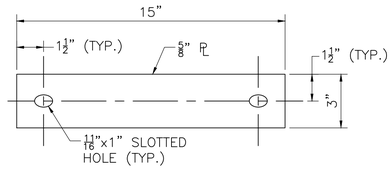

CONNECTION PLATE DETAIL
SCALE: 3" = 1'-0"

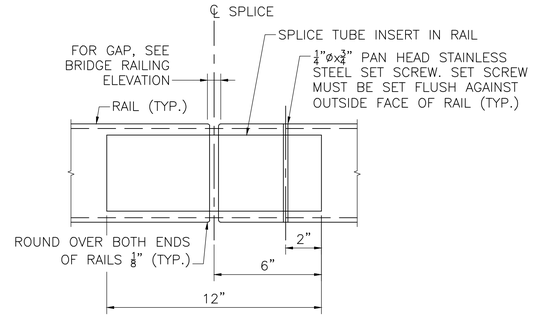

RAIL SPLICE
SCALE: 3" = 1'-0"

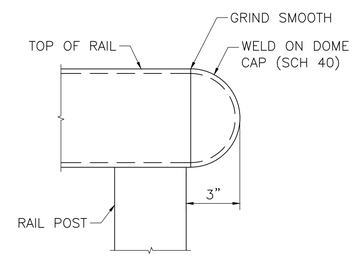

RAIL END
SCALE: 3" = 1'-0"

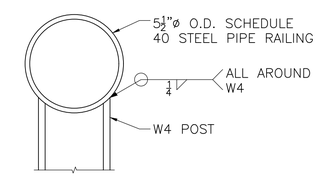

DETAIL B
SCALE: 3" = 1'-0"

*
BQX BR0

SEPT. 8, 2018	ISSUED FOR CONSTRUCTION
DATE	DESCRIPTION
USE ONLY PRINTS OF LATEST DATE	

607732_BR28(F07033).DWG Plotted on 20-Aug-2018 5:21 PM
Final Structural Submittal (SF) 08-September-2018

FRAMINGHAM/NATICK
COCHITUATE RAIL TRAIL

STATE	FED. AID PROJ. NO.	SHEET NO.	TOTAL SHEETS
MA	STP(TE)/TAP/CMQ-0035(206)	195	253
PROJECT FILE NO. 607732			

PEDESTRIAN RAIL DETAILS (2 OF 2)

NOTES:

1. RAILING POST FOUNDATION CONCRETE SHALL BE 4000 PSI, $\frac{3}{4}$" IN., 585 CEMENT CONCRETE.
2. FOR ADDITIONAL DETAILS AND NOTES, SEE SHEET 28.

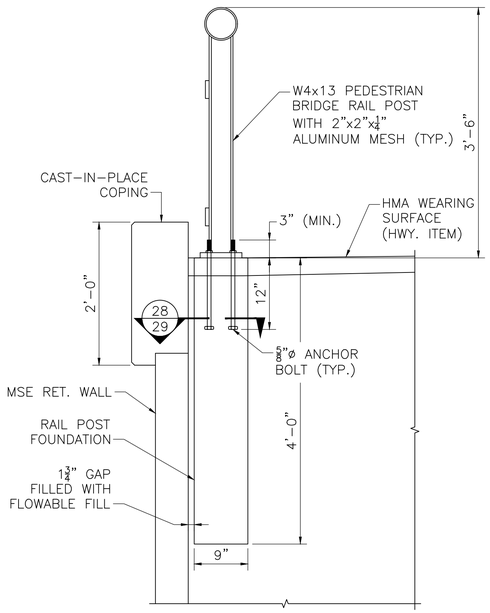

MSE RAILING POST FOUNDATION
SCALE: 1" = 1'-0"

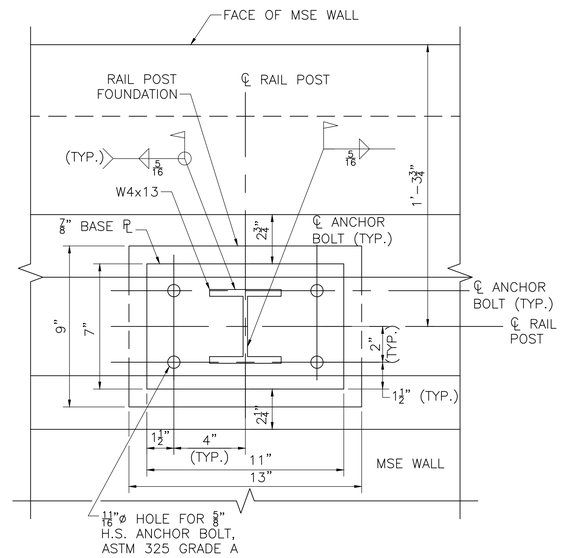

POST FOUNDATION PLAN
SCALE: 3" = 1'-0"

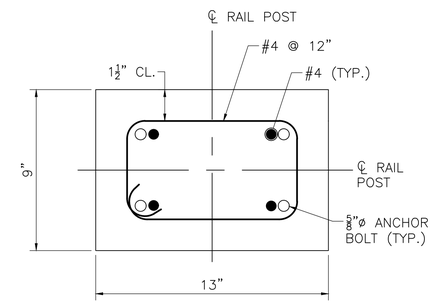

SECTION 28
SCALE: 3" = 1'-0"

*
BQX BR0

DATE	DESCRIPTION
SEPT. 8, 2018	ISSUED FOR CONSTRUCTION
USE ONLY PRINTS OF LATEST DATE	

607732_BR29(F07033).DWG Plotted on 20-Aug-2018 5:21 PM
Final Structural Submittal (SF) 08-September-2018